RoHS

1X4 RJ45 Connector AR14-4164IR



- 10/100 Base-T Ethernet Application
- PoE to meet IEEE802.3af
- Impedance: 100OHMS
- Transmit open circuit inductance (OCL): 350uH (MIN) @100KHz,0.1VRMS with 8mA DC Bias
- RJ45 jack cavity conforms to FCC rules and regulations Part 68, SUB Part F
- Industrial Temp: -40ºC to +85ºC
- Suitable for IR Reflow
- Storage temperature range: -40ºC to +85ºC

Electrical Specifications @ 25°C

Part Number	OCL(uH Min) @ 100kHz, 0.1V With 8mA DC Bias	Turns Ratio chip: cable (±2%)	Insertion Loss (dB Max)	Return Loss (dB Min)		
			1-100MHz	1-30MHz	30-60MHz	60-80MHz
AR14-4164IR	350	1:1	-1.0	-18	-18-20Log(F/30MHz)	-12

Electrical Specifications @ 25°C

Cross Talk (dB Min)					CMR (dB Min)					CDMR (dB Min)					HI-POT (Vrms)
0.5-1MHz	10MHz	30MHz	50MHz	100MHz	0.3-1MHz	10MHz	30MHz	60MHz	100MHz	0.3-1MHz	10MHz	30MHz	60MHz	100MHz	1.0mA/3Sec.
-50	-50	-40	-35	-30	-50	-47	-42	-37	-30	-50	-50	-50	-45	-40	1500

All specifications subject to change without notice.

MECHANICAL

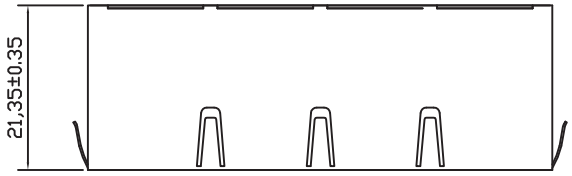

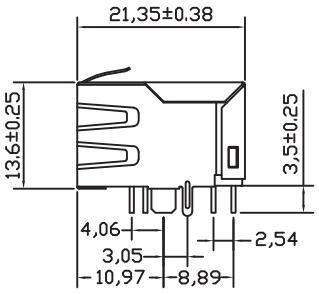

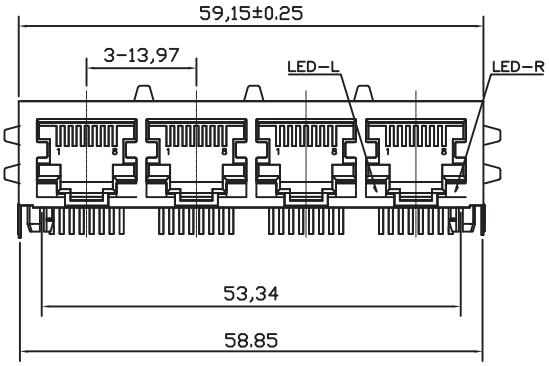

SCHEMATICS

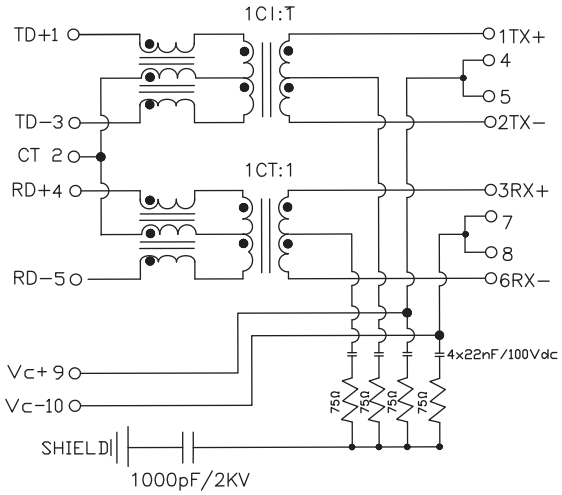

PCB LAYOUT

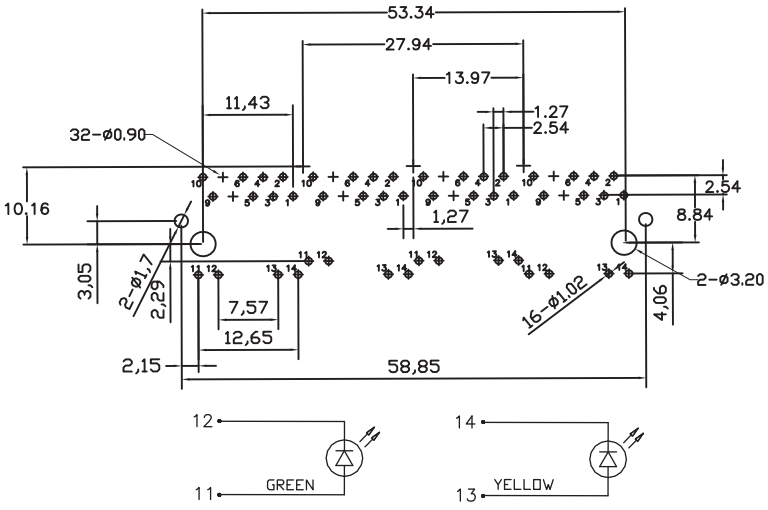

SUGGESTED PANEL OPENING

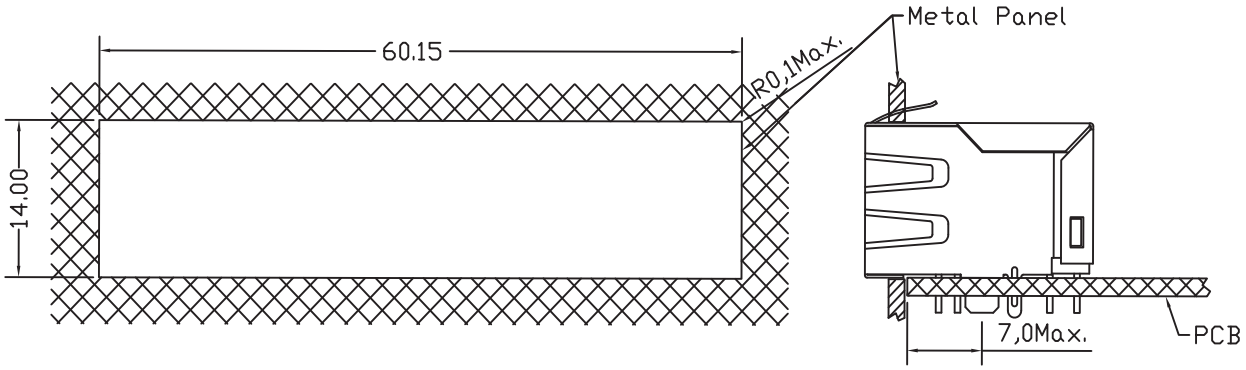

NOTE: The distance of panel inside surgace relative to front surface part is only a suggestion.
In case this distance is different, the required panel opening dimensions change accordingly.

NOTES

1. Shield-	0.20mm THICKNESS BRASS C2680 H. PLATING NICKEL 20u" MIN.
2. Housing-	Standard Material Nylon 66, Glass filled Polyester UL94V-0 Standard Color Black.
3. RJ Terminal-	Plastic: PBT UL94V-0, Standard Color Black. Pin: 0.35mm Thickness Phos-Bronze C5210 EH. Plating: Nickel 40u"-60u" for all and Sn 100%, and 6u" Gold Plating.
4. Input Terminal-	Plastic: PBT, Glass Filled, UL94V-0, Standard Color Black. Pin: 0.35mm SUS430. Plating: Nickel 40u"-60u" for all and Sn 100%.