RoHS

Single Port RJ45 Connector

AR11-4279I

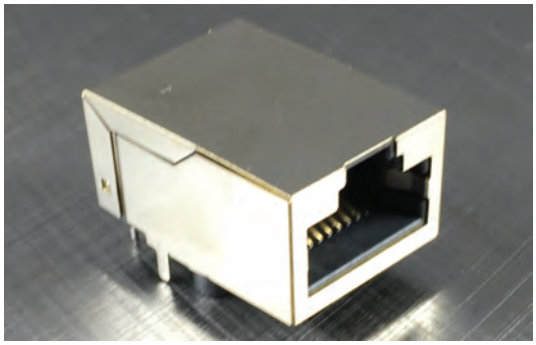

- 1000 Base-T for Ethernet Applications
- Desgined to meet IEEE802.3af standards
- Industrial Temp: -40ºC to + 85ºC

Electrical Specifications @ 25°C

Part Number	OCL(uH Min) @ 100kHz, 0.1V With 8mA DC Bias	Turns Ratio chip: cable (± 5%)	Cross Talk (dB Min) 1-100MHz	CMR (dB Min) 1-100MHz	Hi-Pot (Vrms) 1mA/60Sec.
AR11-4279I	350	1CT:1CT	-30	-30	1500

Electrical Specifications @ 25°C

Part Number	Insertion Loss (dB Max)		Return Loss (dB Min) @ Load 100 Ohm			
	1-100MHz	100-125 MHz	1-30MHz	30-60MHz	60-80MHz	80-100MHz
AR11-4279I	-1.0	-1.2	-18	-16	-12	-10

All specifications subject to change without notice.

MECHANICAL

UNIT: mm

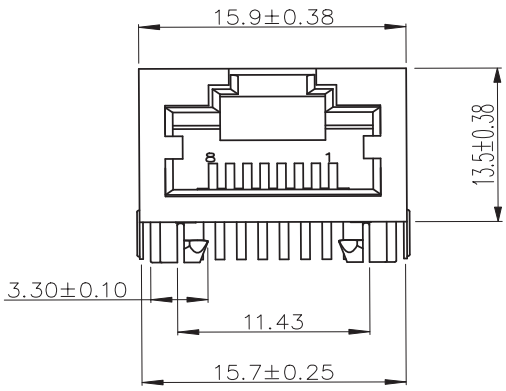

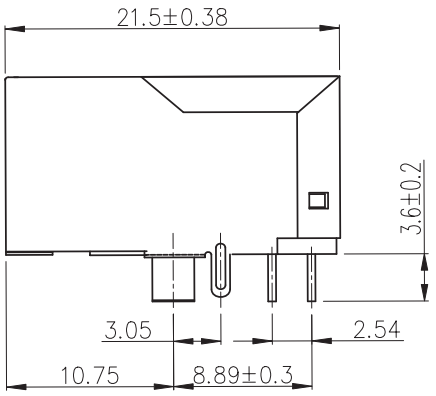

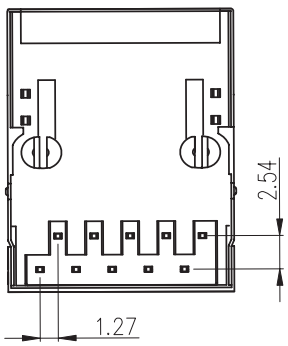

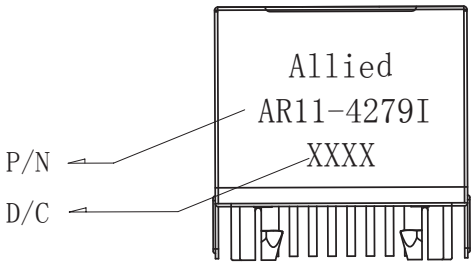

SCHEMATICS

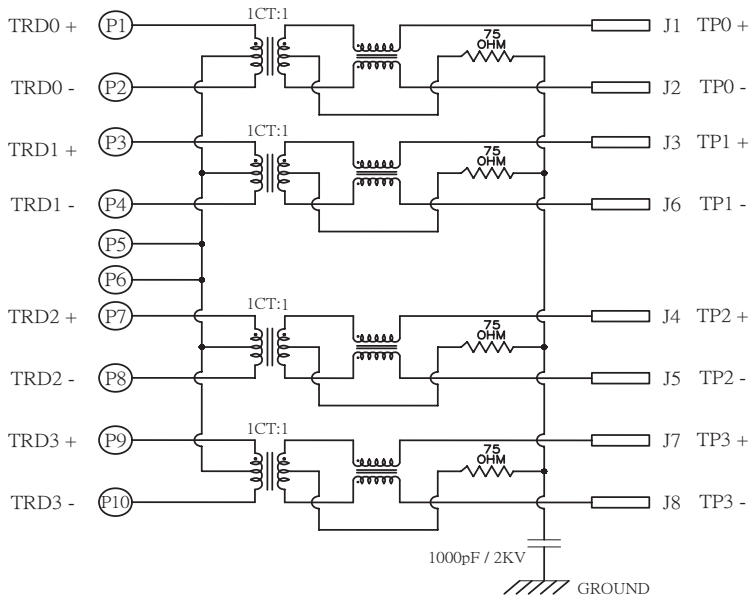

PCB LAYOUT

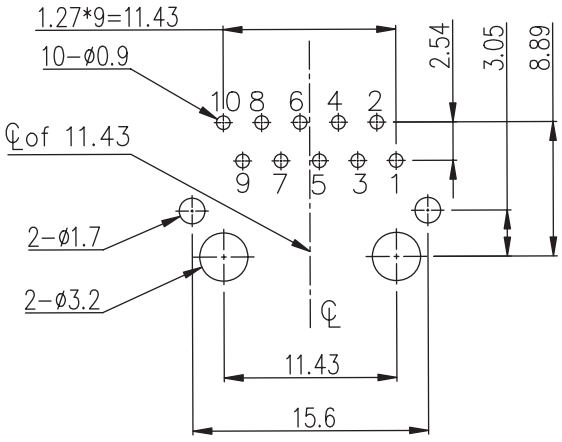

RECOMMENDED PCB LAYOUT
TOLERANCE ±0.05mm(T=1.6mm)

NOTES

1.Shielded — 0.20mm THICKNESS BRASS C2680 H. PLATING NICKEL 20u"—40u".

2.Housing— Standard Material LCP Filled Polyester UL94V—0 Standed Color Black.

3.Contact Pin— Plastic: Nylon66 UL94V—0,Standard Color Black. Pin: 0.35mm Thickness Phos—Bronze C5210 EH Plating: Nickel40u"~60u" for all and Sn 100%, and Gold Flash Plating .

4.InsertPin— Plastic: LCP,Glass Filled,UL94V—0, Standard Color Black. Pin: 0.35mm Thickness SUS430. Plating: Nickel40u"~60u" for all and Sn 100%.