RoHS

Single Port RJ45 Connector

AR11-3671

- 10/100 Base-T Ethernet Application
- Impedance: 100OHMS
- RJ45 jack cavity conforms to FCC rules and regulations Part 68, SUB Part F
- Operating Temp: 0ºC to +70ºC
- Available in other Circuit Designs
- Optional Gold Plating Thickness
- Other LED Patterns available

Electrical Specifications @ 25°C						
Part Number	OCL(uH Min) @ 100kHz, 0.1V	Turns Ratio chip: cable (±2%)	Insertion Loss (dB Max)	Return Loss (dB Min)		
	With 8mA DC Bias		1-100MHz	1-30MHz	30-60MHz	60-80MHz
AR11-3671	350	1CT:1CT	-1.0	-18	-18-20Log(F/30MHz)	-12

Electrical Specifications @ 25°C																
Cross Talk (dB Min)					CMR (dB Min)					CDMR (dB Min)					HI-POT (Vrms)
0.5-1MHz	10MHz	30MHz	50MHz	100MHz	0.3-1MHz	10MHz	30MHz	60MHz	100MHz	0.3-1MHz	10MHz	30MHz	60MHz	100MHz	0.5mA/3Sec.
-50	-50	-40	-35	-30	-50	-47	-42	-37	-30	-50	-50	-50	-45	-40	1500

All specifications subject to change without notice.

MECHANICAL

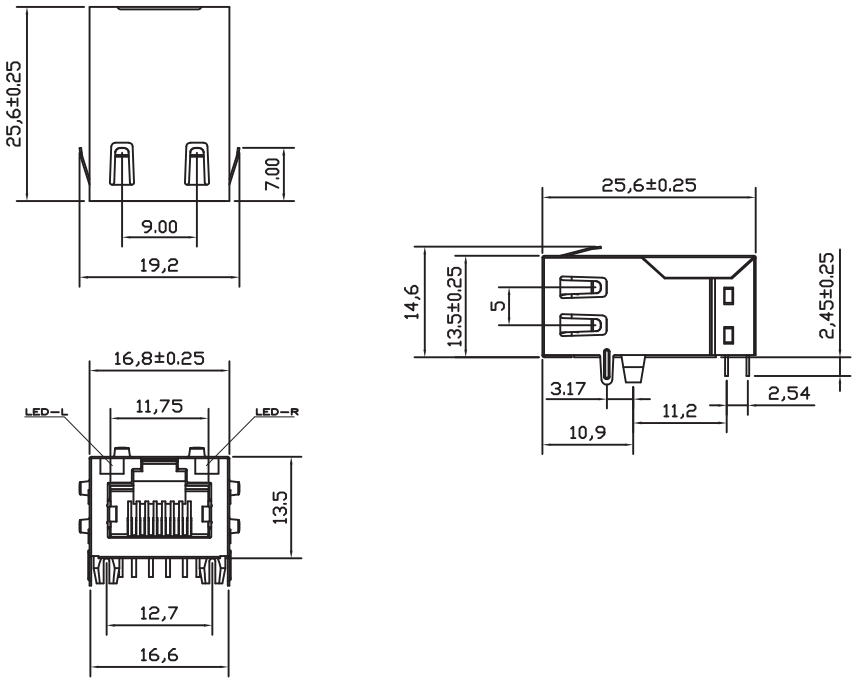

SCHEMATICS

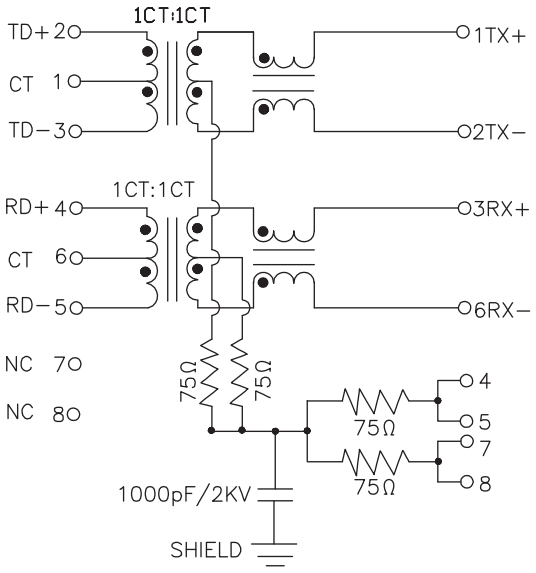

LED Schematic Code:
G
(see chart below)

LED Code				
	Left LED		Right LED	
	+9, -10	-9, +10	+11, -12	-11, +12
A	Green	-	Yellow	-
B	Yellow	-	Green	-
C	Green	-	Green	-
D	-	Green	-	Yellow
E	-	Yellow	-	Green
F	Yellow	-	Orange	Green
G	Orange	Green	Yellow	-
H	Green	-	-	Yellow

PCB LAYOUT

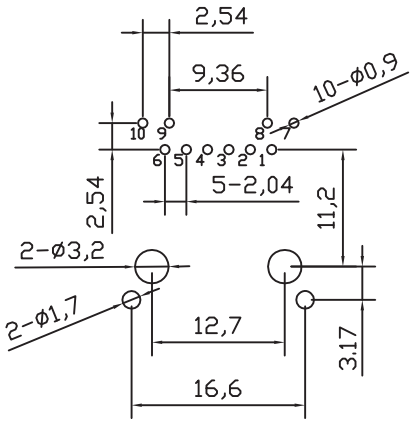

NOTES

1. Shield- 0.20mm THICKNESS BRASS C2680 H.
   PLATING NICKEL 30u"-50u"
2. Housing- Standard Material FR52, Glass filled
   Polyester UL94V-0 Standard Color Black.
3. RJ Terminal- Plastic: FR52, UL94V-0, Standard
   Color Black.
   Pin: 0.35mm Thickness Phos-Bronze C5210 EH.
   Plating: Nickel 40u"-60u" for all and Sn 100%, and
   30u" Gold Plating.
4. Input Terminal: FR52.,Glass Filled, UL94V-0,
   Standard Color Black.
   Pin: 0.35mm Thickness Phos-Bronze C5191.
   Plating: Nickel 40u"-60u" for all and Sn 100%.