AR0502S5
2-Line Ultra Low Capacitance TVS Diode Array

Description

The AR0502S5 is an ultra low capacitance TVS array, utilizing leading monolithic silicon technology to provide fast response time and low ESD clamping voltage, making this device an ideal solution for protecting voltage sensitive high-speed data lines. The AR0502S5 has verylow capacitance with a typical value at 0.3pF, and complies with the IEC 61000-4-2 (ESD) with ±25kV air and ±20kV contact discharge. It is assembled into a 3-pin lead-free SOT-523 package. The combination of small size, low capacitance and high level of ESD protection makes it ideal for HDMI, MDDI, antenna circuits, USB 2.0, and Infiniband circuits.

Features

- Ultra low capacitance: 0.3pF typical (I/O to I/O)
- Ultra low leakage: nA level
- Operating voltage: 5V
- Low clamping voltage
- Up to 2 data lines protects
- Complies with following standards:
  - IEC 61000-4-2 (ESD) immunity test
    - Air discharge: ±25kV
    - Contact discharge: ±20kV
  - IEC61000-4-5 (Lightning) 5A (8/20μs)
- RoHS Compliant

Mechanical Characteristics

- Package: SOT-523
- Lead Finish: Matte Tin
- Case Material: “Green” Molding Compound.
- Moisture Sensitivity: Level 3 per J-STD-020
- Terminal Connections: See Diagram Below
- Marking Information: See Below

Applications

- Mobile Display Digital Interface (MDDI)
- USB 2.0
- Photodetector Protection
- HBT Power Amplifier Protection
- Infiniband Transceiver Protection
- Firewire Ports

Marking Information

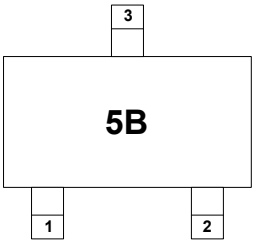

5B = Device Marking Code

Dimensions and Pin Configuration

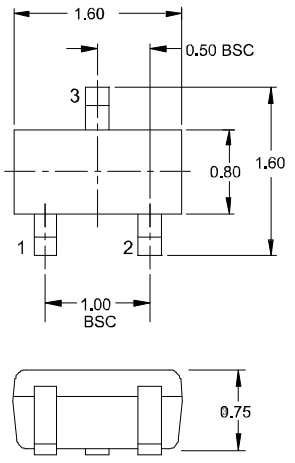

SOT-523 outline

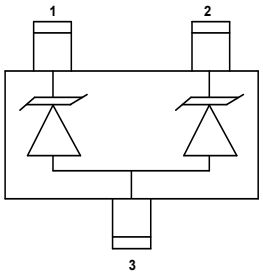

Circuit and Pin Schematic

Ordering Information

Part Number	Packaging	Reel Size
AR0502S5	3000/Tape & Reel	7 inch

Download from alldatasheet.com

Absolute Maximum Ratings (T_A=25°C unless otherwise specified)

Parameter	Symbol	Value	Unit
Peak Pulse Power (8/20μs)	Ppk	80	W
Peak Pulse Current (8/20μs)	I_{PP}	5	A
ESD per IEC 61000−4−2 (Air) ESD per IEC 61000−4−2 (Contact)	V_{ESD}	±25 ±20	kV
Operating Temperature Range	T_J	−55 to +125	°C
Storage Temperature Range	Tstg	−55 to +150	°C

Electrical Characteristics (T_A=25°C unless otherwise specified)

Parameter	Symbol	Min	Typ	Max	Unit	Test Condition
Reverse Working Voltage	V_{RWM}			5	V	Pin 1 or pin 2 to pin 3 and between pin 1 and pin 2
Breakdown Voltage	V_{BR}	6			V	I_T = 1mA, pin 1 or pin 2 to pin 3
Reverse Leakage Current	I_R			0.5	μA	V_{RWM} = 5V, pin 1 or pin 2 to pin 3 and between pin 1 and pin 2
Clamping Voltage	V_C			9	V	I_{PP} = 1A (8 x 20μs pulse), pin 1 pin 2
Clamping Voltage	V_C			16	V	I_{PP} = 5A (8 x 20μs pulse), pin 1 or pin 2 to pin 3
Junction Capacitance	C_J		0.3		pF	VR = 0V, f = 1MHz, pin 1 to pin 2
Junction Capacitance	C_J		0.6	0.8	pF	VR = 0V, f = 1MHz, pin 1 or pin 2 to pin 3

Download from alldatasheet.com

Typical Performance Characteristics (T_A=25°C unless otherwise Specified)

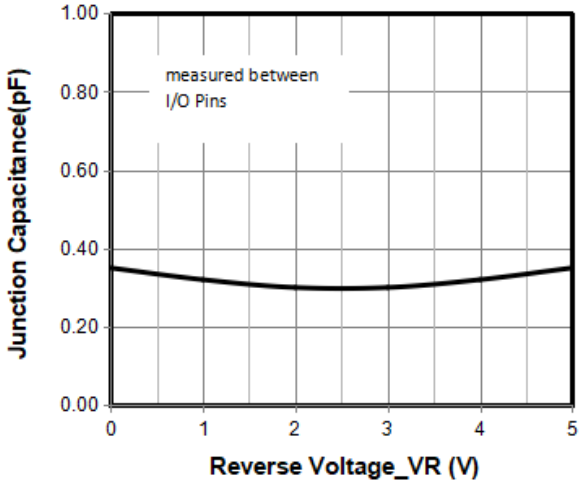

Junction Capacitance vs. Reverse Voltage

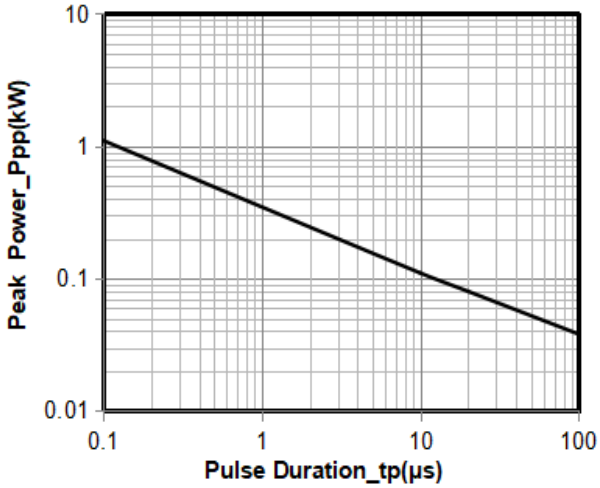

Peak Pulse Power vs. Pulse Time

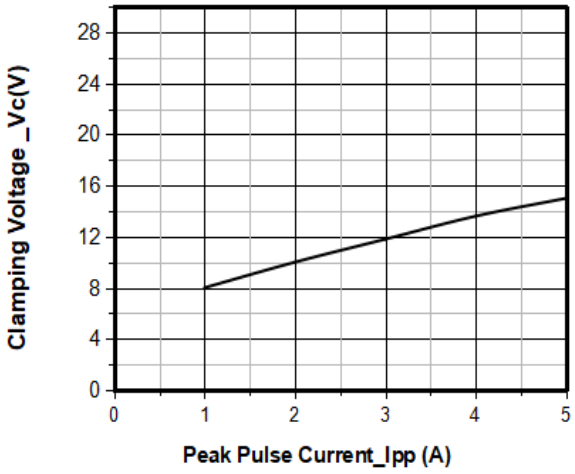

Clamping Voltage vs. Peak Pulse Current

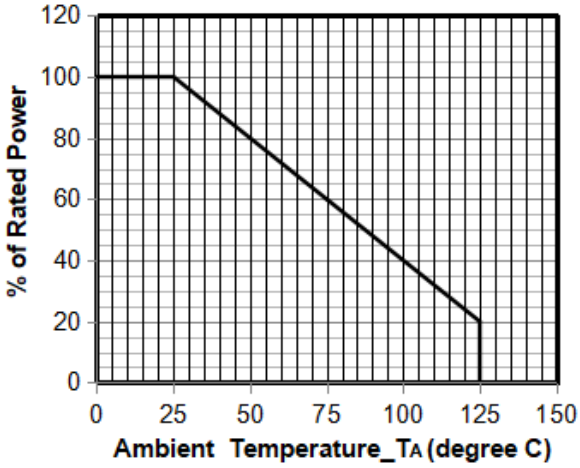

Power Derating Curve

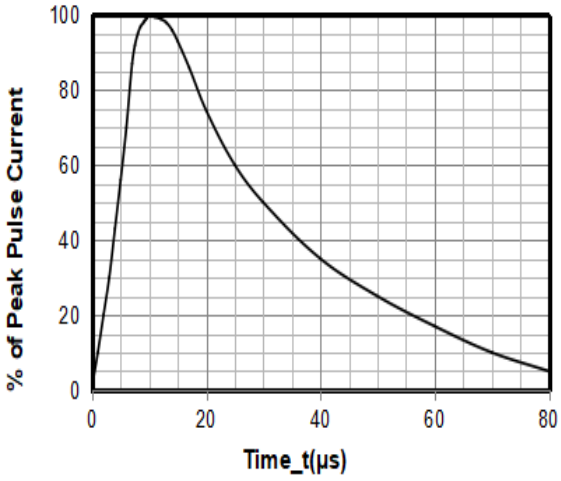

8 X 20μs Pulse Waveform

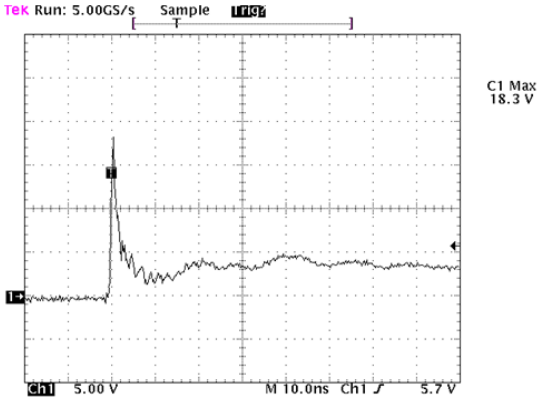

Note：Data is taken with a 10x attenuator

ESD Clamping Voltage

8 kV Contact per IEC61000−4−2

Download from alldatasheet.com

AR0502S5 on USB Port Application

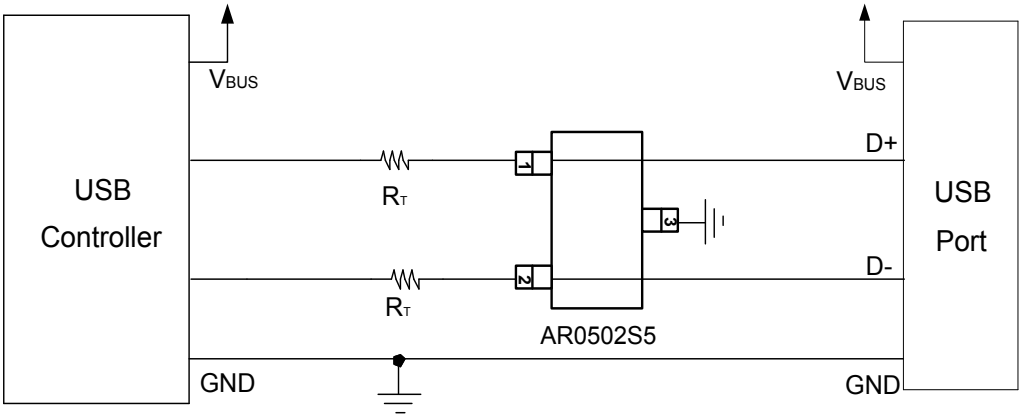

Download from alldatasheet.com

SOT-523 Package Outline Drawing

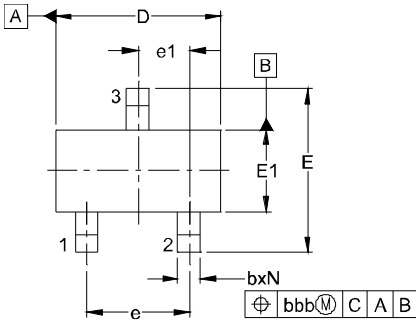

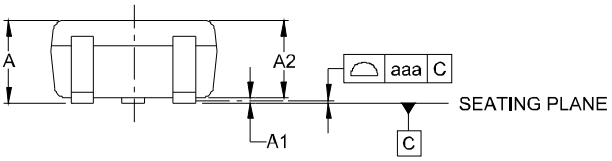

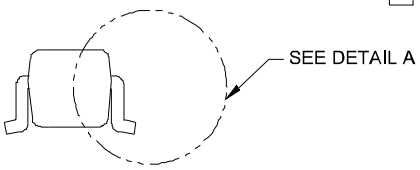

SIDE VIEW

DIM	DIMENSIONS					
	INCHES			MILLIMETERS		
	MIN	NOM	MAX	MIN	NOM	MAX
A	.023	-	.035	0.60	-	0.90
A1	.000	-	.004	0.00	-	0.10
A2	.023	.030	.031	0.60	0.75	0.80
b	.005	-	.012	0.15	-	0.30
c	.003	-	.008	0.10	-	0.20
D	.059	.063	.067	1.50	1.60	1.70
E	.057	.063	.069	1.45	1.60	1.75
E1	.029	.031	.033	0.75	0.80	0.85
e	.039 BSC			1.00 BSC		
e1	.020 BSC			0.50 BSC		
L	(.009)			(0.22)		
N	3			3		
θ	0°	-	8°	0°	-	8°
aaa	.004			0.10		
bbb	.008			0.20		

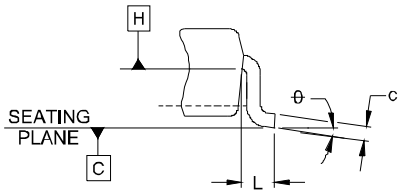

DETAIL A

Suggested Land Pattern

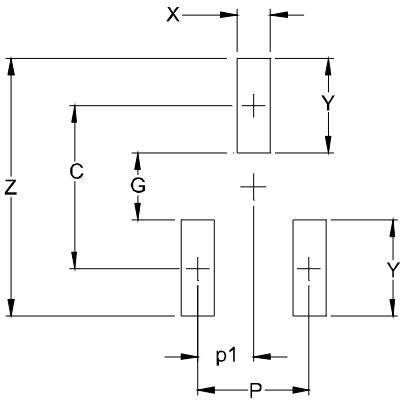

SYM	DIMENSIONS	
	INCHES	MILLIME-TERS
C	(.055)	(1.40)
P	.039	1.00
P1	.020	0.50
G	.024	0.60
X	.016	0.40
Y	.031	0.80
Z	.087	2.20

Contact Information

Applied Power Microelectronics Co., Ltd.

Website: http://www.appliedpowermicro.com

Email: sales@appliedpowermicro.com

Phone: +86 (0519) 8399 3606

Applied Power Microelectronics Co., Ltd. (APM) reserves the right to make changes to the product specification and data in this document without notice. APM makes no warranty, representation or guarantee regarding the suitability of its products for any particular purpose, nor does APM assume any liability arising from the application or use of any products or circuits, and specifically disclaims any and all liability, including without limitation special, consequential or incidental damages.

Download from alldatasheet.com