AR0134CS

1/3-inch 1.2 Mp CMOS Digital Image Sensor with Global Shutter

ON Semiconductor®

www.onsemi.com

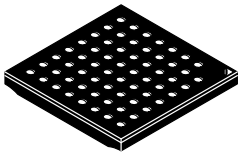

IBGA63 9 × 9
CASE 503AG

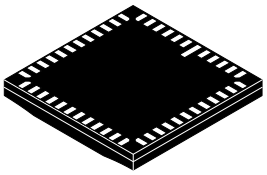

ILCC48 10 × 10
CASE 847AE

ORDERING INFORMATION

See detailed ordering and shipping information on page 2 of this data sheet.

Description

The AR0134CS from ON Semiconductor is a 1/3-inch 1.2 Mp CMOS digital image sensor with an active-pixel array of 1280 (H) × 960 (V). It is designed for low light performance and features a global shutter for accurate capture of moving scenes. It includes sophisticated camera functions such as auto exposure control, windowing, scaling, row skip mode, and both video and single frame modes. It is programmable through a simple two-wire serial interface. The AR0134CS produces extraordinarily clear, sharp digital pictures, and its ability to capture both continuous video and single frames makes it the perfect choice for a wide range of applications, including scanning and industrial inspection.

Table 1. KEY PERFORMANCE PARAMETERS

Parameter	Typical Value
Optical Format	1/3-inch (6 mm)
Active Pixels	1280 (H) × 960 (V) = 1.2 Mp
Pixel Size	3.75 μm
Color Filter Array	RGB Bayer or Monochrome
Shutter Type	Global Shutter
Input Clock Range	6–50 MHz
Output Pixel Clock (Maximum)	74.25 MHz
Output Serial Parallel	 HiSPi 12-bit
Frame Rate Full Resolution 720p	 54 fps 60 fps
Responsivity Monochrome Color	 6.1 V/lux−sec 5.3 V/lux−sec
SNR_{MAX}	38.6 dB
Dynamic Range	64 dB
Supply Voltage I/O Digital Analog HiSPi	 1.8 or 2.8 V 1.8 V 2.8 V 0.4 V
Power Consumption	< 400 mW
Operating Temperature	–30°C to + 70°C (Ambient) –30°C to + 80°C (Junction)
Package Options	9 × 9 mm 63-pin iBGA
	10 × 10 mm 48-pin iLCC
	Bare Die

Features

- ON Semiconductor's 3rd Generation Global Shutter Technology
- Superior Low-light Performance
- HD Video (720p60)
- Video/Single Frame Mode
- Flexible Row-skip Modes
- On-chip AE and Statistics Engine
- Parallel and Serial Output
- Support for External LED or Flash
- Auto Black Level Calibration
- Context Switching

Applications

- Scene Processing
- Scanning and Machine Vision
- 720p60 Video Applications

© Semiconductor Components Industries, LLC, 2012

ORDERING INFORMATION

Table 2. ORDERABLE PART NUMBERS

Part Number	Description
AR0134CSSM25SUEA0	Mono, iBGA, 25° Shift
AR0134CSSM00SUEA0	Mono, iBGA
AR0134CSSM00SUEAH	Mono, iBGA, Head Board
AR0134CSSM00SUEAD	Mono, iBGA, Demo Kit
AR0134CSSC00SUEA0	Color, iBGA
AR0134CSSC00SUEAH	Color, iBGA, Head Board
AR0134CSSC00SUEAD	Color, iBGA, Demo Kit
AR0134CSSM00SPCA0	Mono, iLCC (Parallel)
AR0134CSSM25SPCA0	Mono, iLCC (Parallel), 25° Shift
AR0134CSSC00SPCA0	Color, iLCC (Parallel)
AR0134CSSC00SPD20	Color, Bare Die
AR0134CSSM00SPD20	Mono, Bare Die
AR0134CSSM25SPD20	Mono, Bare Die, 25° Shift

See the ON Semiconductor Device Nomenclature document (TND310/D) for a full description of the naming convention used for image sensors. For reference documentation, including information on evaluation kits, please visit our web site at www.onsemi.com.

GENERAL DESCRIPTION

The ON Semiconductor AR0134CS can be operated in its default mode or programmed for frame size, exposure, gain, and other parameters. The default mode output is a full-resolution image at 54 frames per second (fps). It outputs 12-bit raw data, using either the parallel or serial (HiSPi) output ports. The device may be operated in video (master) mode or in frame trigger mode.

FRAME_VALID and LINE_VALID signals are output on dedicated pins, along with a synchronized pixel clock. A dedicated FLASH pin can be programmed to control external LED or flash exposure illumination.

The AR0134CS includes additional features to allow application-specific tuning: windowing, adjustable auto-exposure control, auto black level correction, on-board temperature sensor, and row skip and digital binning modes.

The sensor is designed to operate in a wide temperature range (–30°C to +70°C).

FUNCTIONAL OVERVIEW

The AR0134CS is a progressive-scan sensor that generates a stream of pixel data at a constant frame rate. It uses an on-chip, phase-locked loop (PLL) that can be optionally enabled to generate all internal clocks from a single master input clock running between 6 and 50 MHz. The maximum output pixel rate is 74.25 Mp/s, corresponding to a clock rate of 74.25 MHz. Figure 1 shows a block diagram of the sensor.

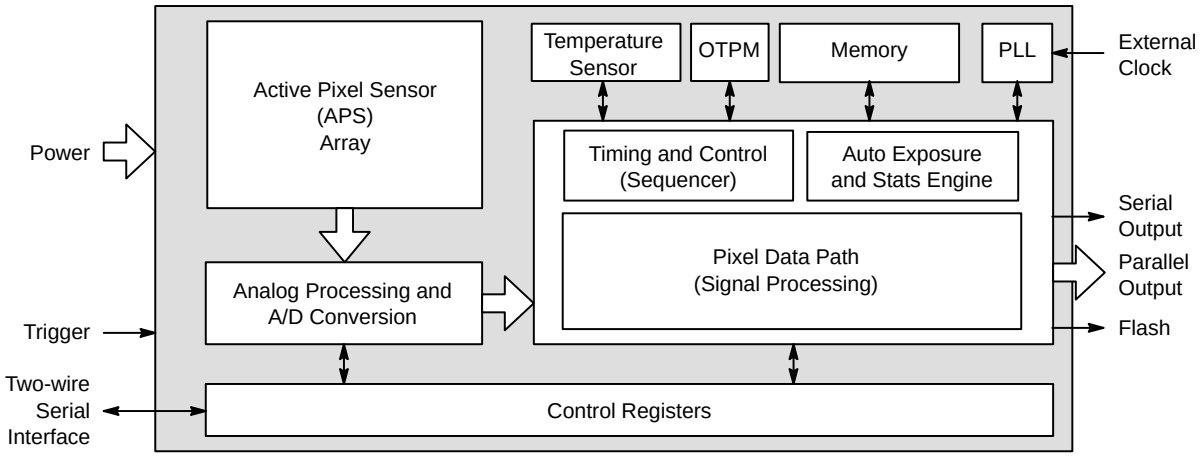

Figure 1. Block Diagram

User interaction with the sensor is through the two-wire serial bus, which communicates with the array control, analog signal chain, and digital signal chain. The core of the sensor is a 1.2 Mp Active-Pixel Sensor array. The AR0134CS features global shutter technology for accurate capture of moving images. The exposure of the entire array is controlled by programming the integration time by register setting. All rows simultaneously integrate light prior to readout. Once a row has been read, the data from the columns is sequenced through an analog signal chain (providing offset correction and gain), and then through an analog-to-digital converter (ADC). The output from the ADC is a 12-bit value for each pixel in the array. The ADC output passes through a digital processing signal chain (which provides further data path corrections and applies digital gain). The pixel data are output at a rate of up to 74.25 Mp/s, in parallel to frame and line synchronization signals.

FEATURES OVERVIEW

The AR0134CS Global Sensor shutter has a wide array of features to enhance functionality and to increase versatility. A summary of features follows. Please refer to the AR0134CS Developer Guide for detailed feature descriptions, register settings, and tuning guidelines and recommendations.

- Operating Modes
  The AR0134CS works in master (video), trigger (single frame), or Auto Trigger modes. In master mode, the sensor generates the integration and readout timing. In trigger mode, it accepts an external trigger to start exposure, then generates the exposure and readout timing. The exposure time is programmed through the two-wire serial interface for both modes. Trigger mode is not compatible with the HiSPi interface.
- Window Control
  Configurable window size and blanking times allow a wide range of resolutions and frame rates. Digital binning and skipping modes are supported, as are vertical and horizontal mirror operations.
- Context Switching
  Context switching may be used to rapidly switch between two sets of register values. Refer to the AR0134CS Developer Guide for a complete set of context switchable registers.
- Gain
  The AR0134CS Global Shutter sensor can be configured for analog gain of up to 8x, and digital gain of up to 8x.
- Automatic Exposure Control
  The integrated automatic exposure control may be used to ensure optimal settings of exposure and gain are computed and updated every other frame. Refer to the AR0134CS Developer Guide for more details.
- HiSPi
  The AR0134CS Global Shutter image sensor supports two or three lanes of Streaming-SP or Packetized-SP protocols of ON Semiconductor's High-Speed Serial Pixel Interface.
- PLL
  An on chip PLL provides reference clock flexibility and supports spread spectrum sources for improved EMI performance.
- Reset
  The AR0134CS may be reset by a register write, or by a dedicated input pin.
- Output Enable
  The AR0134CS output pins may be tri-stated using a dedicated output enable pin.
- Temperature Sensor
  The temperature sensor is only guaranteed to be functional when the AR0134CS is initially powered-up or is reset at temperatures at or above 0°C.
- Black Level Correction
- Row Noise Correction
- Column Correction
- Test Patterns
  Several test patterns may be enabled for debug purposes. These include a solid color, color bar, fade to grey, and a walking 1s test pattern.

PIXEL DATA FORMAT

Pixel Array Structure

The AR0134CS pixel array is configured as 1412 columns by 1028 rows, (see Figure 2). The dark pixels are optically black and are used internally to monitor black level. Of the right 108 columns, 64 are dark pixels used for row noise correction. Of the top 24 rows of pixels, 12 of the dark rows are used for black level correction. There are 1296 columns by 976 rows of optically active pixels. While the sensor's format is 1280 × 960, the additional active columns and active rows are included for use when horizontal or vertical mirrored readout is enabled, to allow readout to start on the same pixel. The pixel adjustment is always performed for monochrome or color versions. The active area is surrounded with optically transparent dummy pixels to improve image uniformity within the active area. Not all dummy pixels or barrier pixels can be read out.

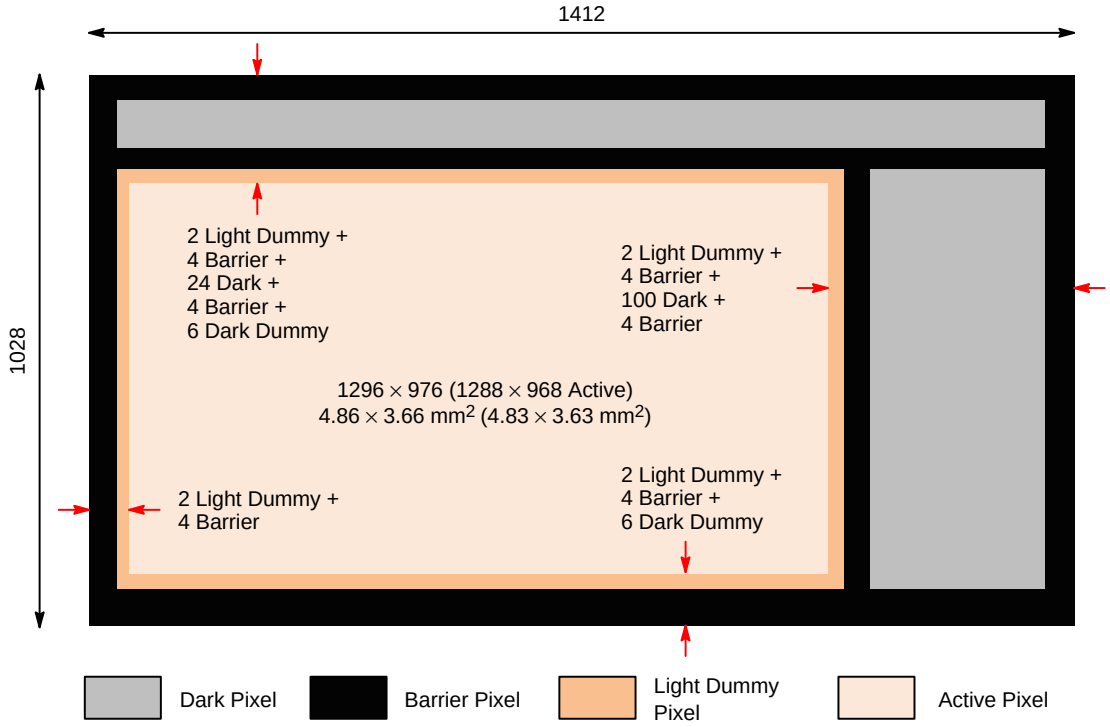

Figure 2. Pixel Array Description

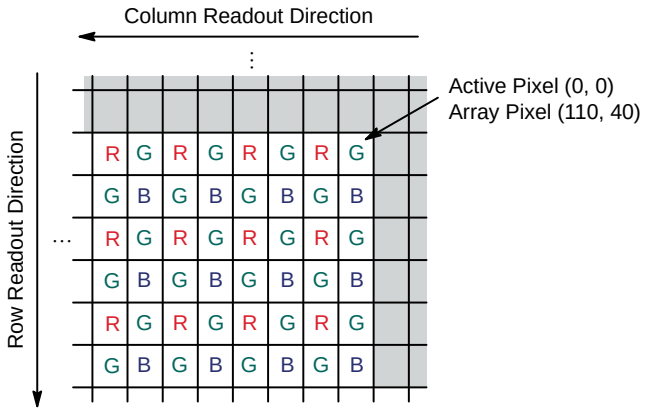

Figure 3. Pixel Color Pattern Detail (Top Right Corner)

Default Readout Order

By convention, the sensor core pixel array is shown with the first addressable (logical) pixel (0,0) in the top right corner (see Figure 3). This reflects the actual layout of the array on the die. Also, the physical location of the first pixel data read out of the sensor in default condition is that of pixel (110, 40).

CONFIGURATION AND PINOUT

The figures and tables below show a typical configuration for the AR0134CS image sensor and show the package pinouts.

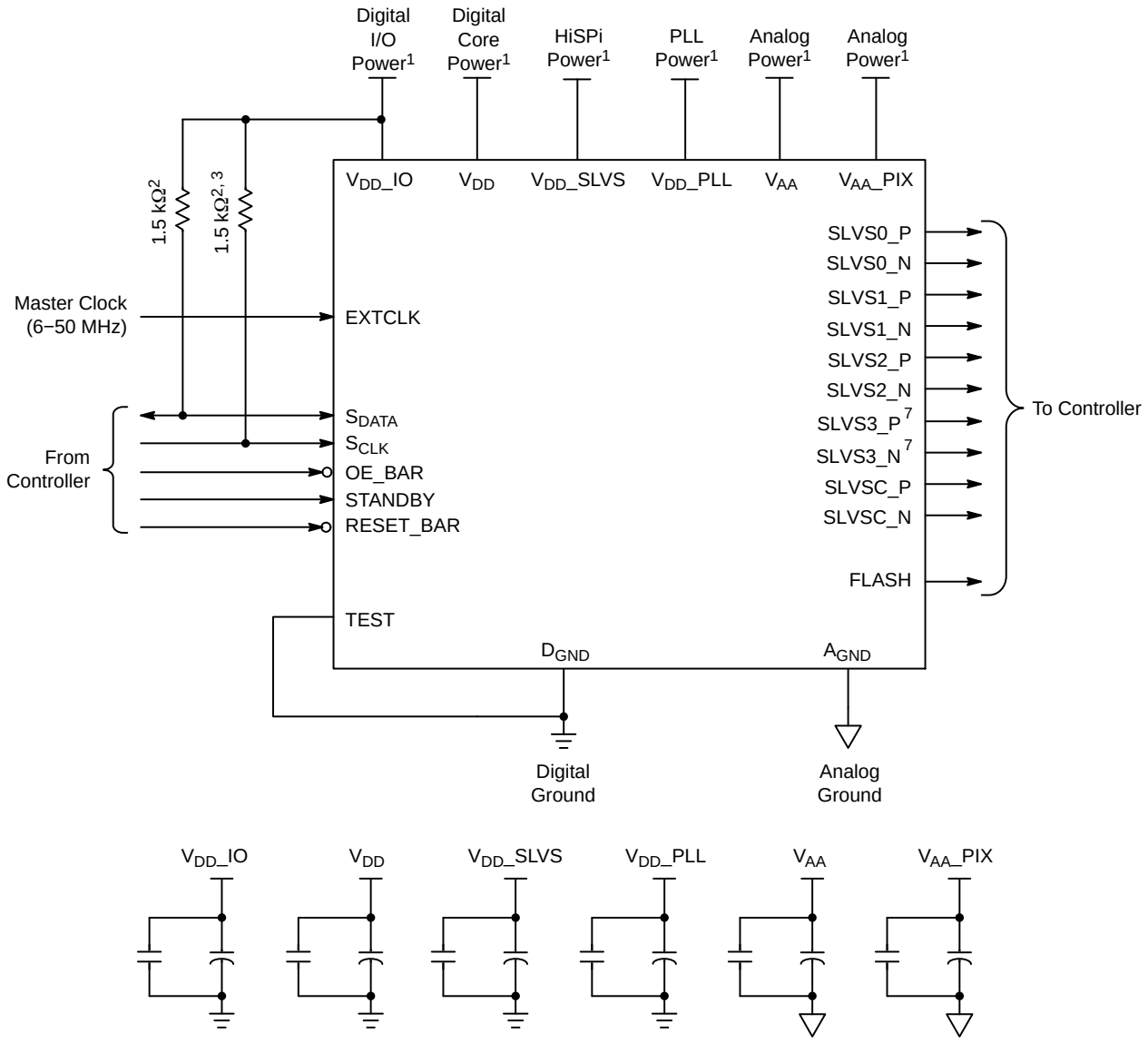

Notes:

1. All power supplies must be adequately decoupled.
2. ON Semiconductor recommends a resistor value of 1.5 kΩ, but a greater value may be used for slower two-wire speed.
3. This pull-up resistor is not required if the controller drives a valid logic level on S_{CLK} at all times.
4. The parallel interface output pads can be left unconnected if the serial output interface is used.
5. ON Semiconductor recommends that 0.1 μF and 10 μF decoupling capacitors for each power supply are mounted as close as possible to the pad. Actual values and results may vary depending on the layout and design considerations. Refer to the AR0134CS demo head-board schematics for circuit recommendations.
6. ON Semiconductor recommends that analog power planes be placed in a manner such that coupling with the digital power planes is minimized.
7. Although 4 serial lanes are shown, the AR0134CS supports only 2- or 3-lane HiSPi.

Figure 4. Serial 4-lane HiSPi Interface

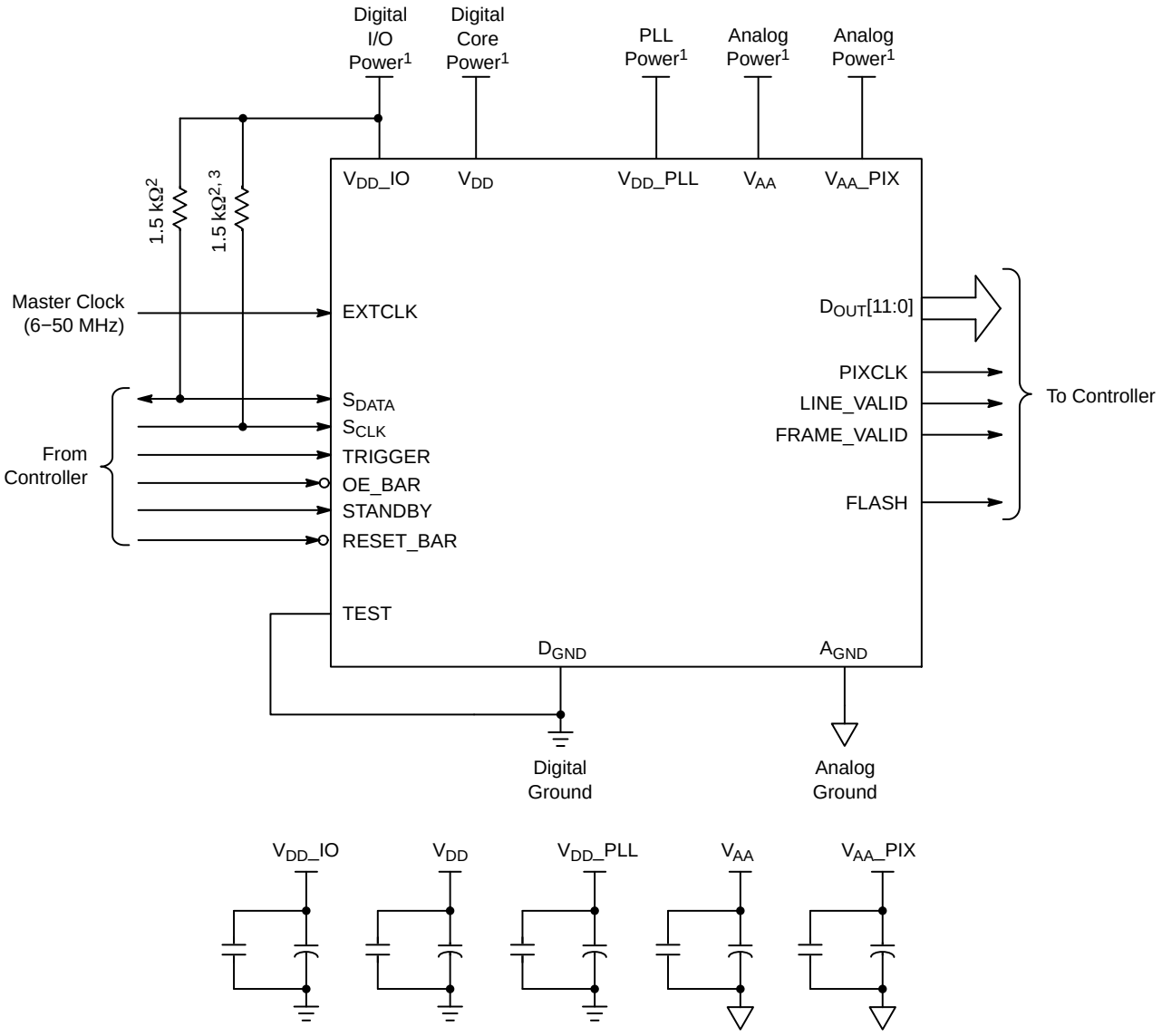

Notes:

1. All power supplies must be adequately decoupled.
2. ON Semiconductor recommends a resistor value of 1.5 kΩ, but a greater value may be used for slower two-wire speed.
3. This pull-up resistor is not required if the controller drives a valid logic level on S_{CLK} at all times.
4. The serial interface output pads can be left unconnected if the parallel output interface is used.
5. ON Semiconductor recommends that 0.1 μF and 10 μF decoupling capacitors for each power supply are mounted as close as possible to the pad. Actual values and results may vary depending on the layout and design considerations. Refer to the AR0134CS demo headboard schematics for circuit recommendations.
6. ON Semiconductor recommends that analog power planes be placed in a manner such that coupling with the digital power planes is minimized.

Figure 5. Parallel Pixel Data Interface

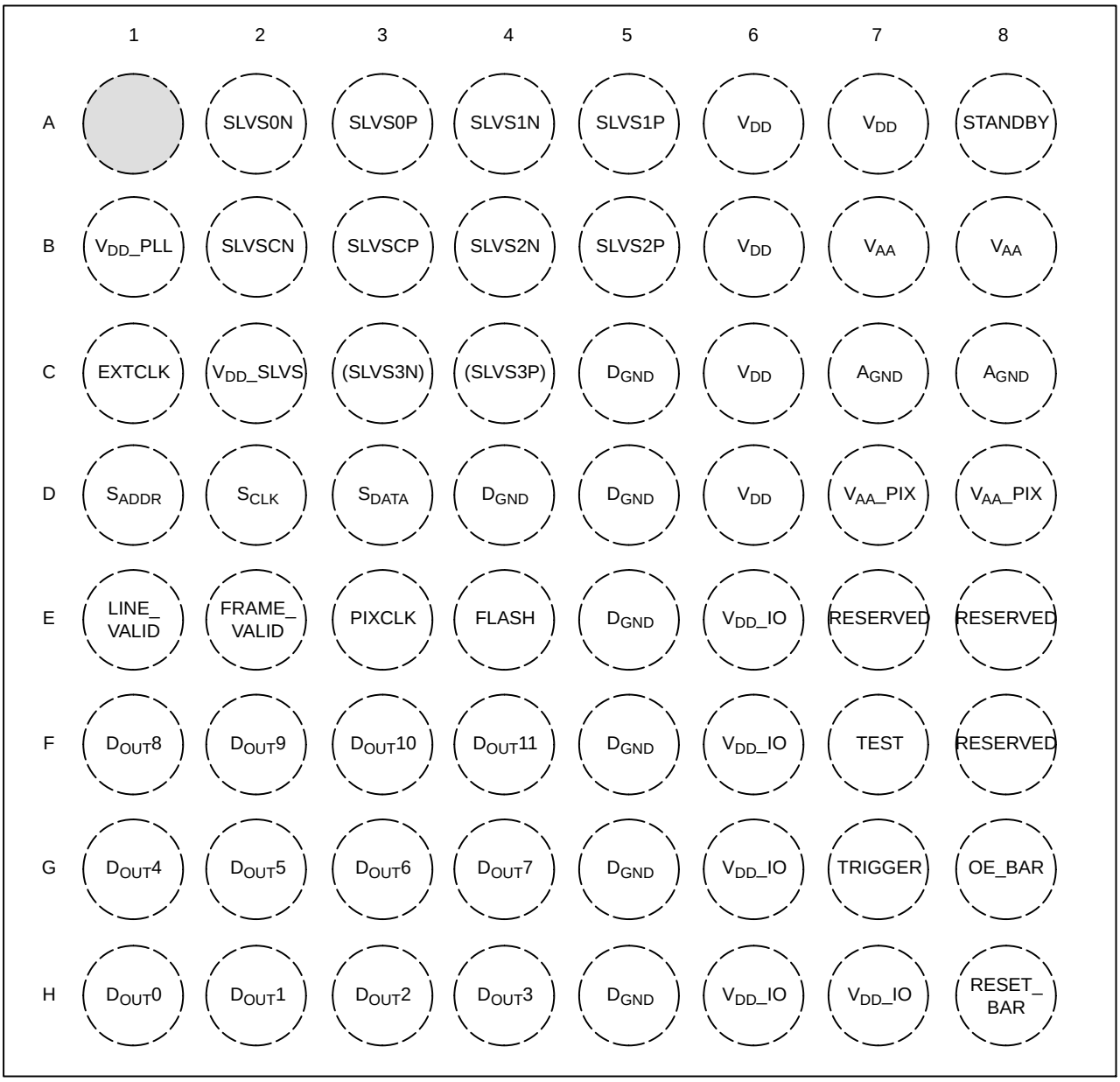

Top View
(Ball Down)

Figure 6. 9 × 9 mm 63-ball iBGA Package

Table 3. PIN DESCRIPTIONS − 63-BALL IBGA PACKAGE

Name	iBGA Pin	Type	Description
SLVS0_N	A2	Output	HiSPi serial data, lane 0, differential N
SLVS0_P	A3	Output	HiSPi serial data, lane 0, differential P
SLVS1_N	A4	Output	HiSPi serial data, lane 1, differential N
SLVS1_P	A5	Output	HiSPi serial data, lane 1, differential P
STANDBY	A8	Input	Standby-mode enable pin (active HIGH)
V_{DD}_PLL	B1	Power	PLL power
SLVSC_N	B2	Output	HiSPi serial DDR clock differential N

Table 3. PIN DESCRIPTIONS − 63-BALL IBGA PACKAGE (continued)

Name	iBGA Pin	Type	Description
SLVSC_P	B3	Output	HiSPi serial DDR clock differential P
SLVS2_N	B4	Output	HiSPi serial data, lane 2, differential N
SLVS2_P	B5	Output	HiSPi serial data, lane 2, differential P
V_{AA}	B7, B8	Power	Analog power
EXTCLK	C1	Input	External input clock
V_{DD}_SLVS	C2	Power	HiSPi power (May leave unconnected if parallel interface is used)
SLVS3_N	C3	Output	(Unsupported) HiSPi serial data, lane 3, differential N
SLVS3_P	C4	Output	(Unsupported) HiSPi serial data, lane 3, differential P
D_{GND}	C5, D4, D5, E5, F5, G5, H5	Power	Digital GND
V_{DD}	A6, A7, B6, C6, D6	Power	Digital power
A_{GND}	C7, C8	Power	Analog GND
S_{ADDR}	D1	Input	Two-Wire Serial address select
S_{CLK}	D2	Input	Two-Wire Serial clock input
S_{DATA}	D3	I/O	Two-Wire Serial data I/O
V_{AA}_PIX	D7, D8	Power	Pixel power
LINE_VALID	E1	Output	Asserted when D_{OUT} line data is valid
FRAME_VALID	E2	Output	Asserted when D_{OUT} frame data is valid
PIXCLK	E3	Output	Pixel clock out. D_{OUT} is valid on rising edge of this clock
FLASH	E4	Output	Control signal to drive external light sources
V_{DD}_IO	E6, F6, G6, H6, H7	Power	I/O supply power
D_{OUT}8	F1	Output	Parallel pixel data output
D_{OUT}9	F2	Output	Parallel pixel data output
D_{OUT}10	F3	Output	Parallel pixel data output
D_{OUT}11	F4	Output	Parallel pixel data output (MSB)
TEST	F7	Input	Manufacturing test enable pin (connect to D_{GND})
D_{OUT}4	G1	Output	Parallel pixel data output
D_{OUT}5	G2	Output	Parallel pixel data output
D_{OUT}6	G3	Output	Parallel pixel data output
D_{OUT}7	G4	Output	Parallel pixel data output
TRIGGER	G7	Input	Exposure synchronization input (Connect to D_{GND} if HiSPi interface is used)
OE_BAR	G8	Input	Output enable (active LOW)
D_{OUT}0	H1	Output	Parallel pixel data output (LSB)
D_{OUT}1	H2	Output	Parallel pixel data output
D_{OUT}2	H3	Output	Parallel pixel data output
D_{OUT}3	H4	Output	Parallel pixel data output
RESET_BAR	H8	Input	Asynchronous reset (active LOW). All settings are restored to factory default
Reserved	E7, E8, F8	N/A	Reserved (do not connect)

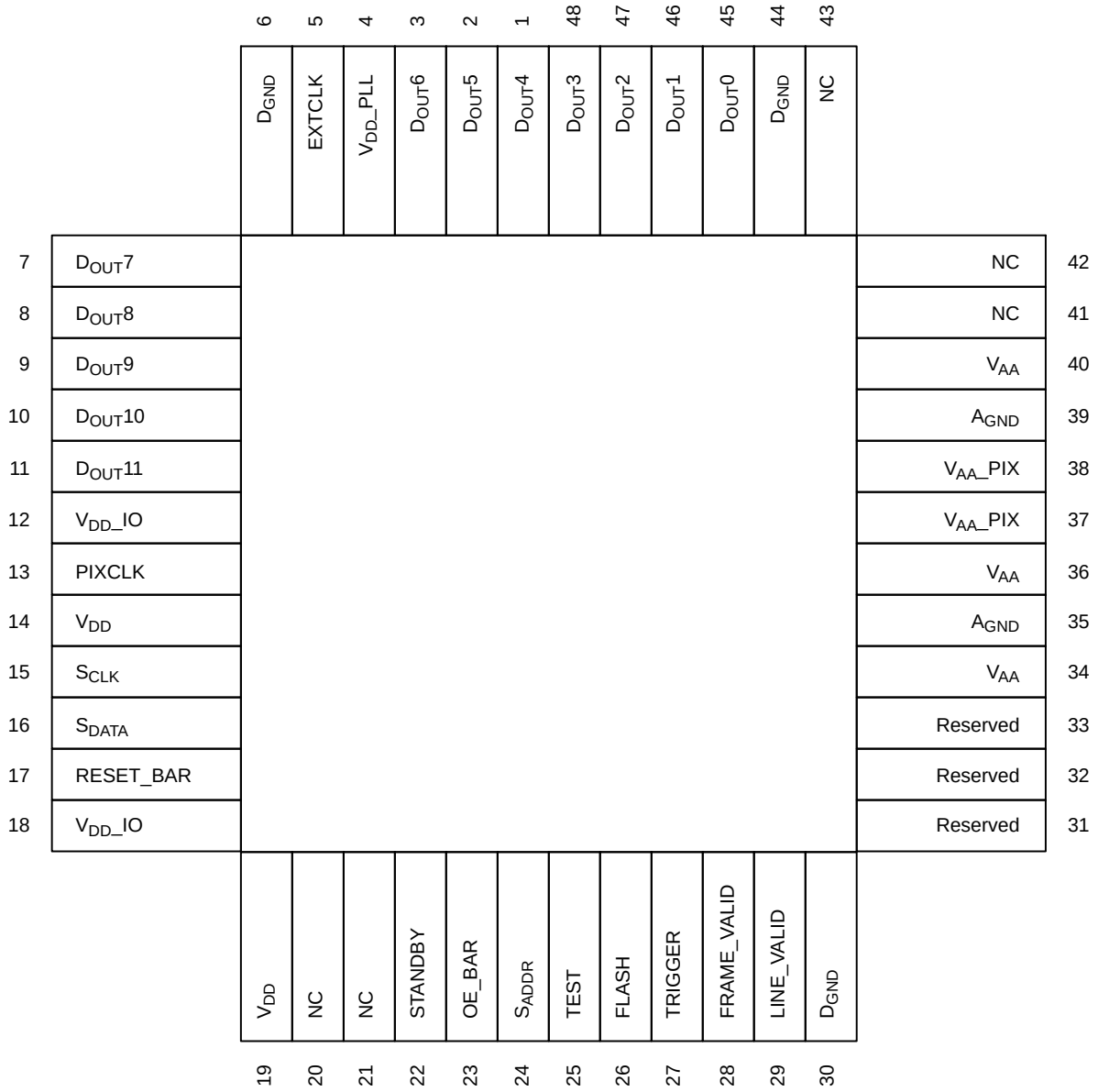

Figure 7. 10 × 10 mm 48-pin iLCC Package, Parallel Output

Table 4. PIN DESCRIPTIONS − 48-PIN ILCC PACKAGE, PARALLEL

Pin Number	Name	Type	Description
1	$D_{OUT}4$	Output	Parallel pixel data output
2	$D_{OUT}5$	Output	Parallel pixel data output
3	$D_{OUT}6$	Output	Parallel pixel data output
4	V_{DD}_PLL	Power	PLL power
5	EXTCLK	Input	External input clock
6	D_{GND}	Power	Digital ground
7	$D_{OUT}7$	Output	Parallel pixel data output
8	$D_{OUT}8$	Output	Parallel pixel data output
9	$D_{OUT}9$	Output	Parallel pixel data output

Table 4. PIN DESCRIPTIONS − 48-PIN ILCC PACKAGE, PARALLEL (continued)

Pin Number	Name	Type	Description
10	$D_{OUT}10$	Output	Parallel pixel data output
11	$D_{OUT}11$	Output	Parallel pixel data output (MSB)
12	V_{DD_IO}	Power	I/O supply power
13	PIXCLK	Output	Pixel clock out. D_{OUT} is valid on rising edge of this clock
14	V_{DD}	Power	Digital power
15	S_{CLK}	Input	Two-Wire Serial clock input
16	S_{DATA}	I/O	Two-Wire Serial data I/O
17	RESET_BAR	Input	Asynchronous reset (active LOW). All settings are restored to factory default
18	V_{DD_IO}	Power	I/O supply power
19	V_{DD}	Power	Digital power
20	NC		No connection
21	NC		No connection
22	STANDBY	Input	Standby-mode enable pin (active HIGH)
23	OE_BAR	Input	Output enable (active LOW)
24	S_{ADDR}	Input	Two-Wire Serial address select
25	TEST	Input	Manufacturing test enable pin (connect to D_{GND})
26	FLASH	Output	Flash output control
27	TRIGGER	Input	Exposure synchronization input
28	FRAME_VALID	Output	Asserted when D_{OUT} frame data is valid
29	LINE_VALID	Output	Asserted when D_{OUT} line data is valid
30	D_{GND}	Power	Digital ground
31	Reserved	N/A	Reserved (do not connect)
32	Reserved	N/A	Reserved (do not connect)
33	Reserved	N/A	Reserved (do not connect)
34	V_{AA}	Power	Analog power
35	A_{GND}	Power	Analog ground
36	V_{AA}	Power	Analog power
37	V_{AA_PIX}	Power	Pixel power
38	V_{AA_PIX}	Power	Pixel power
39	A_{GND}	Power	Analog ground
40	V_{AA}	Power	Analog power
41	NC		No connection
42	NC		No connection
43	NC		No connection
44	D_{GND}	Power	Digital ground
45	$D_{OUT}0$	Output	Parallel pixel data output (LSB)
46	$D_{OUT}1$	Output	Parallel pixel data output
47	$D_{OUT}2$	Output	Parallel pixel data output
48	$D_{OUT}3$	Output	Parallel pixel data output

TWO-WIRE SERIAL REGISTER INTERFACE

The two-wire serial interface bus enables read/write access to control and status registers within the AR0134CS.

The interface protocol uses a master/slave model in which a master controls one or more slave devices. The sensor acts as a slave device. The master generates a clock (S_{CLK}) that is an input to the sensor and is used to synchronize transfers. Data is transferred between the master and the slave on a bidirectional signal (S_{DATA}). S_{DATA} is pulled up to V_{DD_IO} off-chip by a 1.5 kΩ resistor. Either the slave or master device can drive S_{DATA} LOW − the interface protocol determines which device is allowed to drive S_{DATA} at any given time.

The protocols described in the two-wire serial interface specification allow the slave device to drive S_{CLK} LOW; the AR0134CS uses S_{CLK} as an input only and therefore never drives it LOW.

Protocol

Data transfers on the two-wire serial interface bus are performed by a sequence of low-level protocol elements:

1. a (repeated) start condition
2. a slave address/data direction byte
3. an (a no) acknowledge bit
4. a message byte
5. a stop condition

The bus is idle when both S_{CLK} and S_{DATA} are HIGH. Control of the bus is initiated with a start condition, and the bus is released with a stop condition. Only the master can generate the start and stop conditions.

Start Condition

A start condition is defined as a HIGH-to-LOW transition on S_{DATA} while S_{CLK} is HIGH. At the end of a transfer, the master can generate a start condition without previously generating a stop condition; this is known as a “repeated start” or “restart” condition.

Stop Condition

A stop condition is defined as a LOW-to-HIGH transition on S_{DATA} while S_{CLK} is HIGH.

Data Transfer

Data is transferred serially, 8 bits at a time, with the MSB transmitted first. Each byte of data is followed by an acknowledge bit or a no-acknowledge bit. This data transfer mechanism is used for the slave address/data direction byte and for message bytes.

One data bit is transferred during each S_{CLK} clock period. S_{DATA} can change when S_{CLK} is LOW and must be stable while S_{CLK} is HIGH.

Slave Address/Data Direction Byte

Bits [7:1] of this byte represent the device slave address and bit [0] indicates the data transfer direction. A “0” in bit [0] indicates a WRITE, and a “1” indicates a READ. The default slave addresses used by the AR0134CS are 0x20 (write address) and 0x21 (read address) in accordance with the specification. Alternate slave addresses of 0x30 (write address) and 0x31 (read address) can be selected by enabling and asserting the S_{ADDR} input.

An alternate slave address can also be programmed through R0x31FC.

Message Byte

Message bytes are used for sending register addresses and register write data to the slave device and for retrieving register read data.

Acknowledge Bit

Each 8-bit data transfer is followed by an acknowledge bit or a no-acknowledge bit in the S_{CLK} clock period following the data transfer. The transmitter (which is the master when writing, or the slave when reading) releases S_{DATA}. The receiver indicates an acknowledge bit by driving S_{DATA} LOW. As for data transfers, S_{DATA} can change when S_{CLK} is LOW and must be stable while S_{CLK} is HIGH.

No-Acknowledge Bit

The no-acknowledge bit is generated when the receiver does not drive S_{DATA} LOW during the S_{CLK} clock period following a data transfer. A no-acknowledge bit is used to terminate a read sequence.

Typical Sequence

A typical READ or WRITE sequence begins by the master generating a start condition on the bus. After the start condition, the master sends the 8-bit slave address/data direction byte. The last bit indicates whether the request is for a read or a write, where a “0” indicates a write and a “1” indicates a read. If the address matches the address of the slave device, the slave device acknowledges receipt of the address by generating an acknowledge bit on the bus.

If the request was a WRITE, the master then transfers the 16-bit register address to which the WRITE should take place. This transfer takes place as two 8-bit sequences and the slave sends an acknowledge bit after each sequence to indicate that the byte has been received. The master then transfers the data as an 8-bit sequence; the slave sends an acknowledge bit at the end of the sequence. The master stops writing by generating a (re)start or stop condition.

If the request was a READ, the master sends the 8-bit write slave address/data direction byte and 16-bit register address, the same way as with a WRITE request. The master then generates a (re)start condition and the 8-bit read slave address/data direction byte, and clocks out the register data, eight bits at a time. The master generates an acknowledge bit after each 8-bit transfer. The slave’s internal register address is automatically incremented after every 8 bits are transferred. The data transfer is stopped when the master sends a no-acknowledge bit.

Single READ from Random Location

This sequence (Figure 8) starts with a dummy WRITE to the 16-bit address that is to be used for the READ. The master terminates the WRITE by generating a restart condition. The master then sends the 8-bit read slave address/data direction byte and clocks out one byte of register data. The master terminates the READ by generating a no-acknowledge bit followed by a stop condition. Figure 8 shows how the internal register address maintained by the AR0134CS is loaded and incremented as the sequence proceeds.

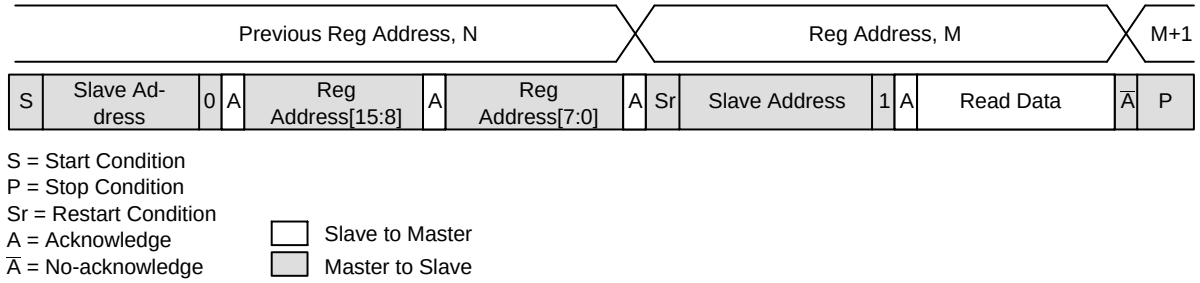

Figure 8. Single READ from Random Location

Single READ from Current Location

This sequence (Figure 9) performs a read using the current value of the AR0134CS internal register address. The master terminates the READ by generating a no-acknowledge bit followed by a stop condition. The figure shows two independent READ sequences.

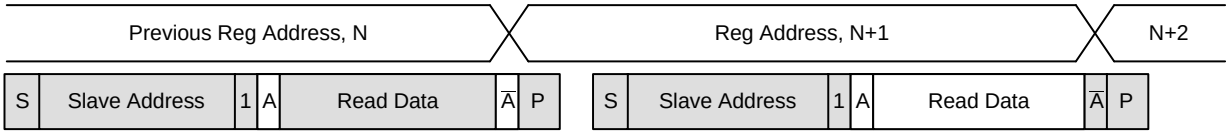

Figure 9. Single READ from Current Location

Sequential READ, Start from Random Location

This sequence (Figure 10) starts in the same way as the single READ from random location (Figure 8). Instead of generating a no-acknowledge bit after the first byte of data has been transferred, the master generates an acknowledge bit and continues to perform byte READs until “L” bytes have been read.

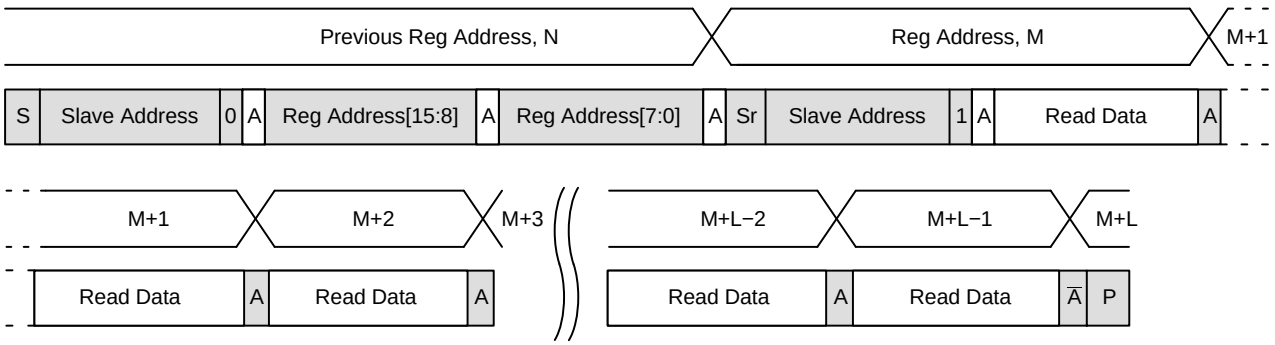

Figure 10. Sequential READ, Start from Random Location

Sequential READ, Start from Current Location

This sequence (Figure 11) starts in the same way as the single READ from current location (Figure 9). Instead of generating a no-acknowledge bit after the first byte of data has been transferred, the master generates an acknowledge bit and continues to perform byte READs until “L” bytes have been read.

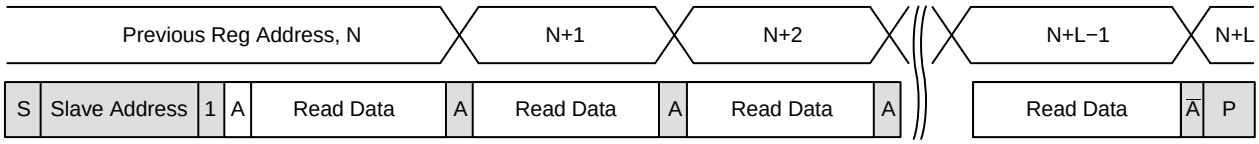

Figure 11. Sequential READ, Start from Current Location

Single WRITE to Random Location

This sequence (Figure 12) begins with the master generating a start condition. The slave address/data direction byte signals a WRITE and is followed by the HIGH then LOW bytes of the register address that is to be written. The master follows this with the byte of write data. The WRITE is terminated by the master generating a stop condition.

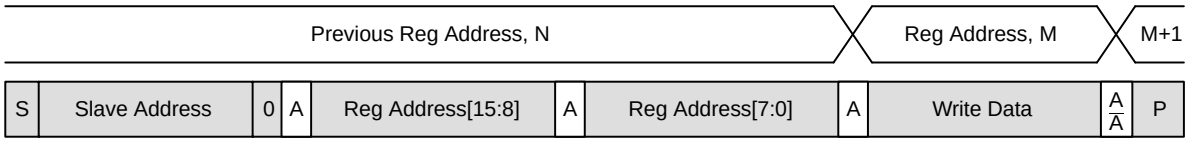

Figure 12. Single WRITE to Random Location

Sequential WRITE, Start at Random Location

This sequence (Figure 13) starts in the same way as the single WRITE to random location (Figure 12). Instead of generating a no-acknowledge bit after the first byte of data has been transferred, the master generates an acknowledge bit and continues to perform byte WRITEs until “L” bytes have been written. The WRITE is terminated by the master generating a stop condition.

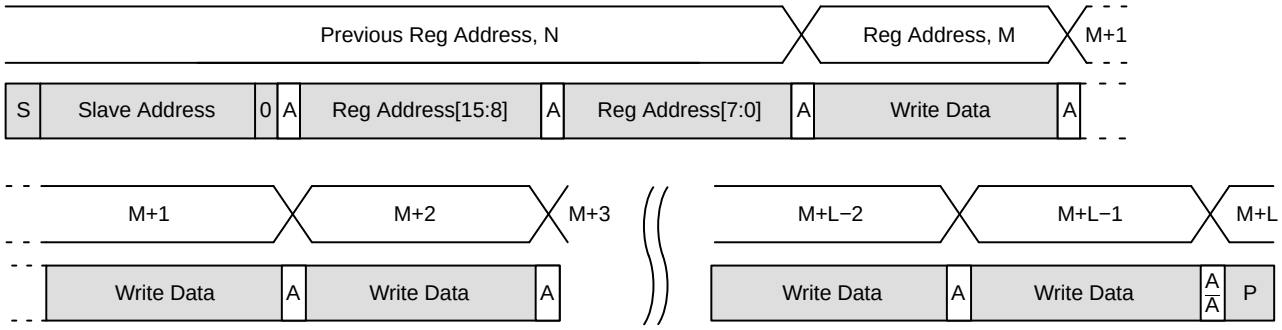

Figure 13. Sequential WRITE, Start at Random Location

ELECTRICAL SPECIFICATIONS

Unless otherwise stated, the following specifications apply to the following conditions:

V_{DD} = 1.8 V –0.10/+0.15;
V_{DD}_IO = V_{DD}_PLL = V_{AA} = V_{AA}_PIX = 2.8 V ±0.3 V;
V_{DD}_SLVS = 0.4 V –0.1/+0.2;
T_A = −30°C to +70°C;
Output Load = 10 pF;
PIXCLK Frequency = 74.25 MHz;
HiSPi off.

Two-Wire Serial Register Interface

The electrical characteristics of the two-wire serial register interface (S_{CLK}, S_{DATA}) are shown in Figure 14 and Table 5.

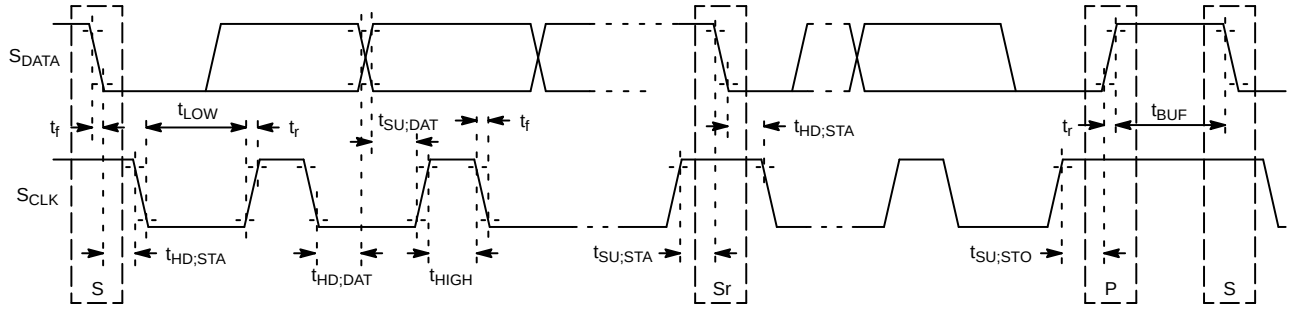

NOTE: Read sequence: For an 8-bit READ, read waveforms start after WRITE command and register address are issued.

Figure 14. Two-Wire Serial Bus Timing Parameters

Table 5. TWO-WIRE SERIAL BUS CHARACTERISTICS

(f_{EXTCLK} = 27 MHz; V_{DD} = 1.8 V; V_{DD}_IO = 2.8 V; V_{AA} = 2.8 V; V_{AA}_PIX = 2.8 V; V_{DD}_PLL = 2.8 V; V_{DD}_DAC = 2.8 V; T_A = 25°C)

Parameter	Symbol	Standard Mode		Fast-Mode		Unit
		Min	Max	Min	Max	
S_{CLK} Clock Frequency	f_{SCL}	0	100	0	400	kHz
Hold Time (Repeated) START Condition						
After This Period, the First Clock Pulse is Generated	$t_{HD;STA}$	4.0	−	0.6	−	μs
LOW Period of the S_{CLK} Clock	t_{LOW}	4.7	−	1.3	−	μs
HIGH Period of the S_{CLK} Clock	t_{HIGH}	4.0	−	0.6	−	μs
Set-up Time for a Repeated START Condition	$t_{SU;STA}$	4.7	−	0.6	−	μs
Data Hold Time	$t_{HD;DAT}$	0 (Note 4)	3.45 (Note 5)	0 (Note 6)	0.9 (Note 5)	μs
Data Set-up Time	$t_{SU;DAT}$	250	−	100 (Note 6)	−	ns
Rise Time of both S_{DATA} and S_{CLK} Signals	t_r	−	1000	20 + 0.1Cb (Note 7)	300	ns
Fall Time of both S_{DATA} and S_{CLK} Signals	t_f	−	300	20 + 0.1Cb (Note 7)	300	ns
Set-up Time for STOP Condition	$t_{SU;STO}$	4.0	−	0.6	−	μs
Bus Free Time between a STOP and START Condition	t_{BUF}	4.7	−	1.3	−	μs
Capacitive Load for each Bus Line	Cb	−	400	−	400	pF
Serial Interface Input Pin Capacitance	CIN_SI	−	3.3	−	3.3	pF

Table 5. TWO-WIRE SERIAL BUS CHARACTERISTICS (continued)
(f_{EXTCLK} = 27 MHz; V_{DD} = 1.8 V; V_{DD}_IO = 2.8 V; V_{AA} = 2.8 V; V_{AA}_PIX = 2.8 V; V_{DD}_PLL = 2.8 V; V_{DD}_DAC = 2.8 V; T_A = 25°C)

Parameter	Symbol	Standard Mode		Fast-Mode		Unit
		Min	Max	Min	Max	
S_{DATA} Max Load Capacitance	CLOAD_SD	–	30	–	30	pF
S_{DATA} Pull-up Resistor	RSD	1.5	4.7	1.5	4.7	kΩ

1. This table is based on I²C standard (v2.1 January 2000). Philips Semiconductor.
2. Two-wire control is I²C-compatible.
3. All values referred to V_{IHmin} = 0.9 V_{DD}_IO and V_{ILmax} = 0.1 V_{DD}_IO levels. Sensor EXCLK = 27 MHz.
4. A device must internally provide a hold time of at least 300 ns for the S_{DATA} signal to bridge the undefined region of the falling edge of S_{CLK}.
5. The maximum $t_{HD;DAT}$ has only to be met if the device does not stretch the LOW period (t_{LOW}) of the S_{CLK} signal.
6. A Fast-mode I²C-bus device can be used in a Standard-mode I²C-bus system, but the requirement $t_{SU;DAT}$ 250 ns must then be met. This will automatically be the case if the device does not stretch the LOW period of the S_{CLK} signal. If such a device does stretch the LOW period of the S_{CLK} signal, it must output the next data bit to the S_{DATA} line t_r max + $t_{SU;DAT}$ = 1000 + 250 = 1250 ns (according to the Standard-mode I²C-bus specification) before the S_{CLK} line is released.
7. Cb = total capacitance of one bus line in pF.

I/O Timing

By default, the AR0134CS launches pixel data, FV and LV with the falling edge of PIXCLK. The expectation is that the user captures D_{OUT}[11:0], FV and LV using the rising edge of PIXCLK. The launch edge of PIXCLK can be configured in register R0x3028. See Figure 15 and Table 6 for I/O timing (AC) characteristics.

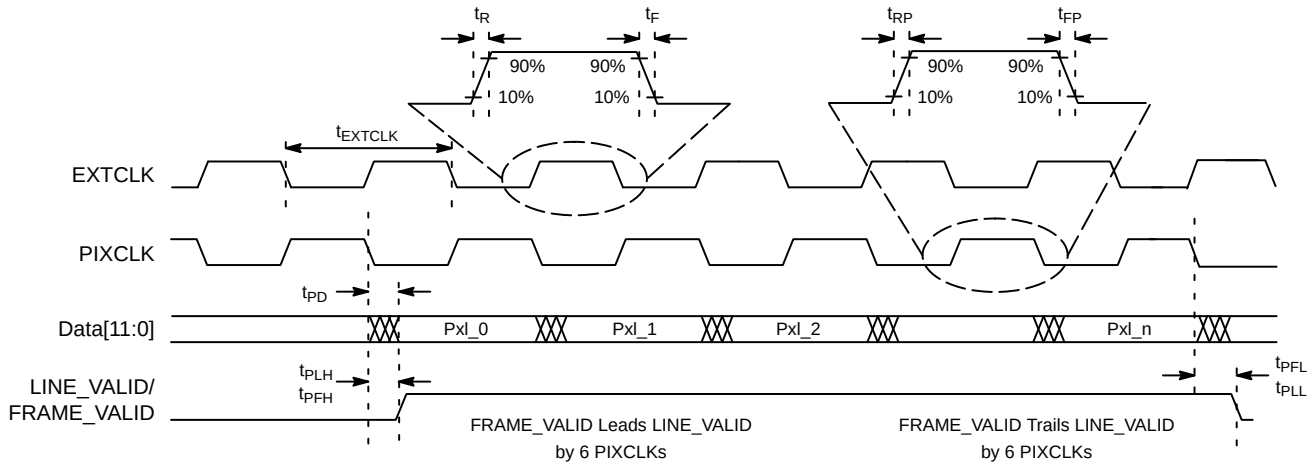

Figure 15. I/O Timing Diagram

Table 6. I/O TIMING CHARACTERISTICS, PARALLEL OUTPUT (1.8 V V_{DD}_IO) (Note 8)

Symbol	Definition	Condition	Min	Typ	Max	Unit
f_{EXTCLK}	Input Clock Frequency		6	–	50	MHz
t_{EXTCLK}	Input Clock Period		20	–	166	ns
t_R	Input Clock Rise Time	PLL Enabled	–	3	–	ns
t_F	Input Clock Fall Time	PLL Enabled	–	3	–	ns
t_{JITTER}	Input Clock Jitter		–	–	600	ns
t_{cp}	EXTCLK to PIXCLK Propagation Delay	Nominal Voltages, PLL Disabled, PIXCLK Slew Rate = 4	5.7	–	14.3	ns
t_{RP}	PIXCLK Rise Time	PCLK Slew Rate = 6	1.3	–	4.0	ns
t_{FP}	PIXCLK Fall Time	PCLK Slew Rate = 6	1.3	–	3.9	ns
	PIXCLK Duty Cycle		40	50	60	%
f_{PIXCLK}	PIXCLK Frequency	PIXCLK Slew Rate = 6, Data Slew Rate = 7	6	–	74.25	MHz
t_{PD}	PIXCLK to Data Valid	PIXCLK Slew Rate = 6, Data Slew Rate = 7	−2.5	–	2	ns

Table 6. I/O TIMING CHARACTERISTICS, PARALLEL OUTPUT (1.8 V V_{DD}_IO) (Note 8) (continued)

Symbol	Definition	Condition	Min	Typ	Max	Unit
t_{PFH}	PIXCLK to FV HIGH	PIXCLK Slew Rate = 6, Data Slew Rate = 7	−2.5	−	2	ns
t_{PLH}	PIXCLK to LV HIGH	PIXCLK Slew Rate = 6, Data Slew Rate = 7	−3	−	1.5	ns
t_{PFL}	PIXCLK to FV LOW	PIXCLK Slew Rate = 6, Data Slew Rate = 7	−2.5	−	2	ns
t_{PLL}	PIXCLK to LV LOW	PIXCLK Slew Rate = 6, Data Slew Rate = 7	−3	−	1.5	ns
C_{IN}	Input Pin Capacitance		−	2.5	−	pF

8. Minimum and maximum values are taken at 70°C, 1.7 V and −30°C, 1.95 V. All values are taken at the 50% transition point. The loading used is 10 pF.
9. Jitter from PIXCLK is already taken into account in the data for all of the output parameters.

Table 7. I/O TIMING CHARACTERISTICS, PARALLEL OUTPUT (2.8 V V_{DD}_IO) (Note 10)

Symbol	Definition	Condition	Min	Typ	Max	Unit
f_{EXTCLK}	Input Clock Frequency		6	−	50	MHz
t_{EXTCLK}	Input Clock Period		20	−	166	ns
t_R	Input Clock Rise Time	PLL Enabled	−	3	−	ns
t_F	Input Clock Fall Time	PLL Enabled	−	3	−	ns
t_{JITTER}	Input Clock Jitter		−	−	600	ns
t_{cp}	EXTCLK to PIXCLK Propagation Delay	Nominal Voltages, PLL Disabled, PIXCLK Slew Rate = 4	5.3	−	13.4	ns
t_{RP}	PIXCLK Rise Time	PCLK Slew Rate = 6	1.3	−	4.0	ns
t_{FP}	PIXCLK Fall Time	PCLK slew rate = 6	1.3	−	3.9	ns
	PIXCLK Duty Cycle		40	50	60	%
f_{PIXCLK}	PIXCLK Frequency	PIXCLK Slew Rate = 6, Data Slew Rate = 7	6	−	74.25	MHz
t_{PD}	PIXCLK to Data Valid	PIXCLK Slew Rate = 6, Data Slew Rate = 7	−2.5	−	2	ns
t_{PFH}	PIXCLK to FV HIGH	PIXCLK Slew Rate = 6, Data Slew Rate = 7	−2.5	−	2	ns
t_{PLH}	PIXCLK to LV HIGH	PIXCLK Slew Rate = 6, Data Slew Rate = 7	−2.5	−	2	ns
t_{PFL}	PIXCLK to FV LOW	PIXCLK Slew Rate = 6, Data Slew Rate = 7	−2.5	−	2	ns
t_{PLL}	PIXCLK to LV LOW	PIXCLK Slew Rate = 6, Data Slew Rate = 7	−2.5	−	2	ns
C_{IN}	Input Pin Capacitance		−	2.5	−	pF

10. Minimum and maximum values are taken at 70°C, 2.5 V and −30°C, 3.1 V. All values are taken at the 50% transition point. The loading used is 10 pF.
11. Jitter from PIXCLK is already taken into account in the data for all of the output parameters.

Table 8. I/O RISE SLEW RATE (2.8 V V_{DD}_IO) (Note 12)

Parallel Slew (R0x306E[15:13])	Condition	Min	Typ	Max	Unit
7	Default	1.50	2.50	3.90	V/ns
6	Default	0.98	1.62	2.52	V/ns
5	Default	0.71	1.12	1.79	V/ns
4	Default	0.52	0.82	1.26	V/ns
3	Default	0.37	0.58	0.88	V/ns
2	Default	0.26	0.40	0.61	V/ns
1	Default	0.17	0.27	0.40	V/ns
0	Default	0.10	0.16	0.23	V/ns

12. Minimum and maximum values are taken at 70°C, 2.5 V and −30°C, 3.1 V. The loading used is 10 pF.

Table 9. I/O FALL SLEW RATE (2.8 V V_{DD}_IO) (Note 13)

Parallel Slew (R0x306E[15:13])	Condition	Min	Typ	Max	Unit
7	Default	1.40	2.30	3.50	V/ns
6	Default	0.97	1.61	2.48	V/ns
5	Default	0.73	1.21	1.86	V/ns
4	Default	0.54	0.88	1.36	V/ns
3	Default	0.39	0.63	0.88	V/ns
2	Default	0.27	0.43	0.66	V/ns
1	Default	0.18	0.29	0.44	V/ns
0	Default	0.11	0.17	0.25	V/ns

13. Minimum and maximum values are taken at 70°C, 2.5 V and −30°C, 3.1 V. The loading used is 10 pF.

Table 10. I/O RISE SLEW RATE (1.8 V V_{DD}_IO) (Note 14)

Parallel Slew (R0x306E[15:13])	Condition	Min	Typ	Max	Unit
7	Default	0.57	0.91	1.55	V/ns
6	Default	0.39	0.61	1.02	V/ns
5	Default	0.29	0.46	0.75	V/ns
4	Default	0.22	0.34	0.54	V/ns
3	Default	0.16	0.24	0.39	V/ns
2	Default	0.12	0.17	0.27	V/ns
1	Default	0.08	0.11	0.18	V/ns
0	Default	0.05	0.07	0.10	V/ns

14. Minimum and maximum values are taken at 70°C, 1.7 V and −30°C, 1.95 V. The loading used is 10 pF.

Table 11. I/O FALL SLEW RATE (1.8 V V_{DD}_IO) (Note 15)

Parallel Slew (R0x306E[15:13])	Condition	Min	Typ	Max	Unit
7	Default	0.57	0.92	1.55	V/ns
6	Default	0.40	0.64	1.08	V/ns
5	Default	0.31	0.50	0.82	V/ns
4	Default	0.24	0.38	0.61	V/ns
3	Default	0.18	0.27	0.44	V/ns
2	Default	0.13	0.19	0.31	V/ns
1	Default	0.09	0.13	0.20	V/ns
0	Default	0.05	0.08	0.12	V/ns

15. Minimum and maximum values are taken at 70°C, 1.7 V and −30°C, 1.95 V. The loading used is 10 pF.

DC Electrical Characteristics

The DC electrical characteristics are shown in Table 12, Table 13, Table 14, and Table 15.

Table 12. DC ELECTRICAL CHARACTERISTICS

Symbol	Definition	Condition	Min	Typ	Max	Unit
V_{DD}	Core Digital Voltage		1.7	1.8	1.95	V
V_{DD_IO}	I/O Digital Voltage		1.7/2.5	1.8/2.8	1.9/3.1	V
V_{AA}	Analog Voltage		2.5	2.8	3.1	V
V_{AA_PIX}	Pixel Supply Voltage		2.5	2.8	3.1	V
V_{DD_PLL}	PLL Supply Voltage		2.5	2.8	3.1	V
V_{DD_SLVS}	HiSPi Supply Voltage		0.3	0.4	0.6	V
V_{IH}	Input HIGH Voltage		$V_{DD_IO} \times 0.7$	–	–	V
V_{IL}	Input LOW Voltage		–	–	$V_{DD_IO} \times 0.3$	V
I_{IN}	Input Leakage Current	No Pull-up Resistor; $V_{IN} = V_{DD_IO}$ or D_{GND}	20	–	–	μA
V_{OH}	Output HIGH Voltage		$V_{DD_IO} – 0.3$	–	–	V
V_{OL}	Output LOW Voltage	V_{DD_IO} = 2.8 V	–	–	0.4	V
I_{OH}	Output HIGH Current	At Specified V_{OH}	–22	–	–	mA
I_{OL}	Output LOW Current	At Specified V_{OL}	–	–	22	mA

CAUTION: Stresses greater than those listed in Table 13 may cause permanent damage to the device. This is a stress rating only, and functional operation of the device at these or any other conditions above those indicated in the operational sections of this specification is not implied.

Table 13. ABSOLUTE MAXIMUM RATINGS

Symbol	Parameter	Minimum	Maximum	Unit
V_{SUPPLY}	Power Supply Voltage (All Supplies)	–0.3	4.5	V
I_{SUPPLY}	Total Power Supply Current	–	200	mA
I_{GND}	Total Ground Current	–	200	mA
V_{IN}	DC Input Voltage	–0.3	V_{DD_IO} + 0.3	V
V_{OUT}	DC Output Voltage	–0.3	V_{DD_IO} + 0.3	V
T_{STG}	Storage Temperature (Note 16)	–40	+85	°C

Stresses exceeding those listed in the Maximum Ratings table may damage the device. If any of these limits are exceeded, device functionality should not be assumed, damage may occur and reliability may be affected.

16. Exposure to absolute maximum rating conditions for extended periods may affect reliability.

Table 14. OPERATING CURRENT CONSUMPTION FOR PARALLEL OUTPUT

($V_{AA} = V_{AA_PIX} = V_{DD_IO} = V_{DD_PLL}$ = 2.8 V; V_{DD} = 1.8 V; PLL Enabled and PIXCLK = 74.25 MHz; T_A = 25°C; C_{LOAD} = 10 pF)

Symbol	Parameter	Condition	Min	Typ	Max	Unit
$I_{DD}1$	Digital Operating Current	Parallel, Streaming, Full Resolution 54 fps	−	46	60	mA
I_{DD_IO}	I/O Digital Operating Current	Parallel, Streaming, Full Resolution 54 fps	−	52	–	mA
I_{AA}	Analog Operating Current	Parallel, Streaming, Full Resolution 54 fps	−	46	55	mA
I_{AA_PIX}	Pixel Supply Current	Parallel, Streaming, Full Resolution 54 fps	−	7	9	mA
I_{DD_PLL}	PLL Supply Current	Parallel, Streaming, Full Resolution 54 fps	−	8	10	mA

Table 15. STANDBY CURRENT CONSUMPTION
(Analog − V_{AA} + V_{AA}_PIX + V_{DD}_PLL; Digital − V_{DD} + V_{DD}_IO; T_A = 25°C)

Definition	Condition	Min	Typ	Max	Unit
Hard Standby (Clock Off, Driven Low)	Analog, 2.8 V	–	3	15	μA
	Digital, 1.8 V	–	25	80	μA
Hard Standby (Clock On, EXTCLK = 20 MHz)	Analog, 2.8 V	–	12	25	μA
	Digital, 1.8 V	–	1.1	1.7	mA
Soft Standby (Clock Off, Driven Low)	Analog, 2.8 V	–	3	15	μA
	Digital, 1.8 V	–	25	80	μA
Soft Standby (Clock On, EXTCLK = 20 MHz)	Analog, 2.8 V	–	12	25	μA
	Digital, 1.8 V	–	1.1	1.7	mA

HiSPi Electrical Specifications

The ON Semiconductor AR0134CS sensor supports SLVS mode only, and does not have a DLL for timing adjustments. Refer to the High-Speed Serial Pixel (HiSPi) Interface Physical Layer Specification v2.00.00 for electrical definitions, specifications, and timing information. The V_{DD}_SLVS supply in this data sheet corresponds to V_{DD}_TX in the HiSPi Physical Layer Specification. Similarly, V_{DD} is equivalent to V_{DD}_HiSPi as referenced in the specification. The HiSPi transmitter electrical specifications are listed at 700 MHz.

Table 16. INPUT VOLTAGE AND CURRENT (HiSPi POWER SUPPLY 0.4 V)
(Measurement Conditions: Max Freq. 700 MHz)

Symbol	Parameter	Min	Typ	Max	Unit
I_{DD}_SLVS	Supply Current (PWR_{HiSPi}) (Driving 100 Ω Load)	–	10	15	mA
V_{CMD}	HiSPi Common Mode Voltage (Driving 100 Ω Load)	V_{DD}_SLVS × 0.45	V_{DD}_SLVS/2	V_{DD}_SLVS × 0.55	V
$\|V_{OD}\|$	HiSPi Differential Output Voltage (Driving 100 Ω Load)	V_{DD}_SLVS × 0.36	V_{DD}_SLVS/2	V_{DD}_SLVS × 0.64	V
ΔV_{CM}	Change in V_{CM} between Logic 1 and 0	−	−	25	mV
$\|V_{OD}\|$	Change in $\|V_{OD}\|$ between Logic 1 and 0	−	−	25	mV
NM	V_{OD} Noise Margin	–	−	30	%
$\|\Delta V_{CM}\|$	Difference in V_{CM} between any Two Channels	−	−	50	mV
$\|\Delta V_{OD}\|$	Difference in V_{OD} between any Two Channels	−	−	100	mV
ΔV_{CM}_ac	Common-mode AC Voltage (pk) without V_{CM} Cap Termination	−	−	50	mV
ΔV_{CM}_ac	Common-mode AC Voltage (pk) with V_{CM} Cap Termination	−	−	30	mV
V_{OD}_ac	Max Overshoot Peak $\|V_{OD}\|$	−	−	1.3 × $\|V_{OD}\|$	V
V_{diff_pkpk}	Max Overshoot $V_{diff\ pk\text{-}pk}$	−	−	2.6 × $\|V_{OD}\|$	V
V_{eye}	Eye Height	1.4 × V_{OD}	−	−	
R_o	Single-ended Output Impedance	35	50	70	Ω
ΔR_o	Output Impedance Mismatch	−	−	20	%

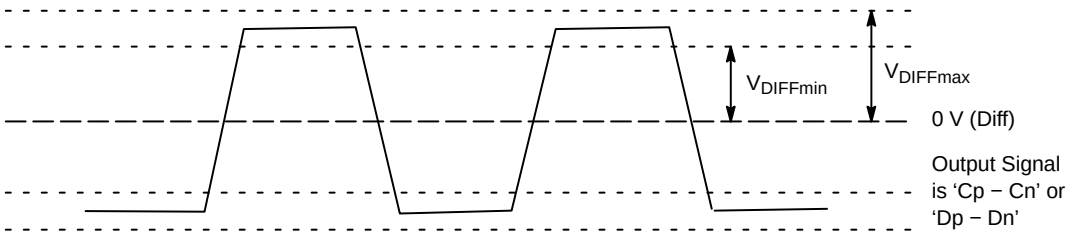

Figure 16. Differential Output Voltage for Clock and Data Pairs

Table 17. RISE AND FALL TIMES

(Measurement Conditions: HiSPi Power Supply 0.4 V, Max Freq. 700 MHz)

Symbol	Parameter	Min	Typ	Max	Unit
1/UI	Data Rate	280	–	700	Mb/s
TxPRE	Max Setup Time from Transmitter (Note 17)	0.3	–	–	UI
TxPost	Max Hold Time from Transmitter	0.3	–	–	UI
RISE	Rise Time (20% − 80%)	–	0.25 UI	–	
FALL	Fall Time (20% − 80%)	150 ps	0.25 UI	–	
PLL_DUTY	Clock Duty	45	50	55	%
t_{pw}	Bitrate Period (Note 17)	1.43	−	3.57	ns
t_{eye}	Eye Width (Notes 17, 18)	0.3	−	−	UI
$t_{totaljit}$	Data Total Jitter (pk pk)@1e−9 (Notes 17, 18)	−	−	0.2	UI
t_{ckjit}	Clock Period Jitter (RMS) (Note 18)	−	−	50	ps
t_{cyjit}	Clock Cycle to Cycle Jitter (RMS) (Note 18)	−	−	100	ps
t_{chskew}	Clock to Data Skew (Notes 17, 18)	−0.1	−	0.1	UI
$t_{\|PHYskew\|}$	PHY-to-PHY Skew (Notes 17, 21)	−	−	2.1	UI
$t_{DIFFSKEW}$	Mean Differential Skew (Note 22)	–100	−	100	ps

17. One UI is defined as the normalized mean time between one edge and the following edge of the clock.
18. Taken from 0 V crossing point.
19. Also defined with a maximum loading capacitance of 10 pF on any pin. The loading capacitance may also need to be less for higher bitrates so the rise and fall times do not exceed the maximum 0.3 UI.
20. The absolute mean skew between the Clock lane and any Data Lane in the same PHY between any edges.
21. The absolute mean skew between any Clock in one PHY and any Data lane in any other PHY between any edges.
22. Differential skew is defined as the skew between complementary outputs. It is measured as the absolute time between the two complementary edges at mean V_{CM} point.

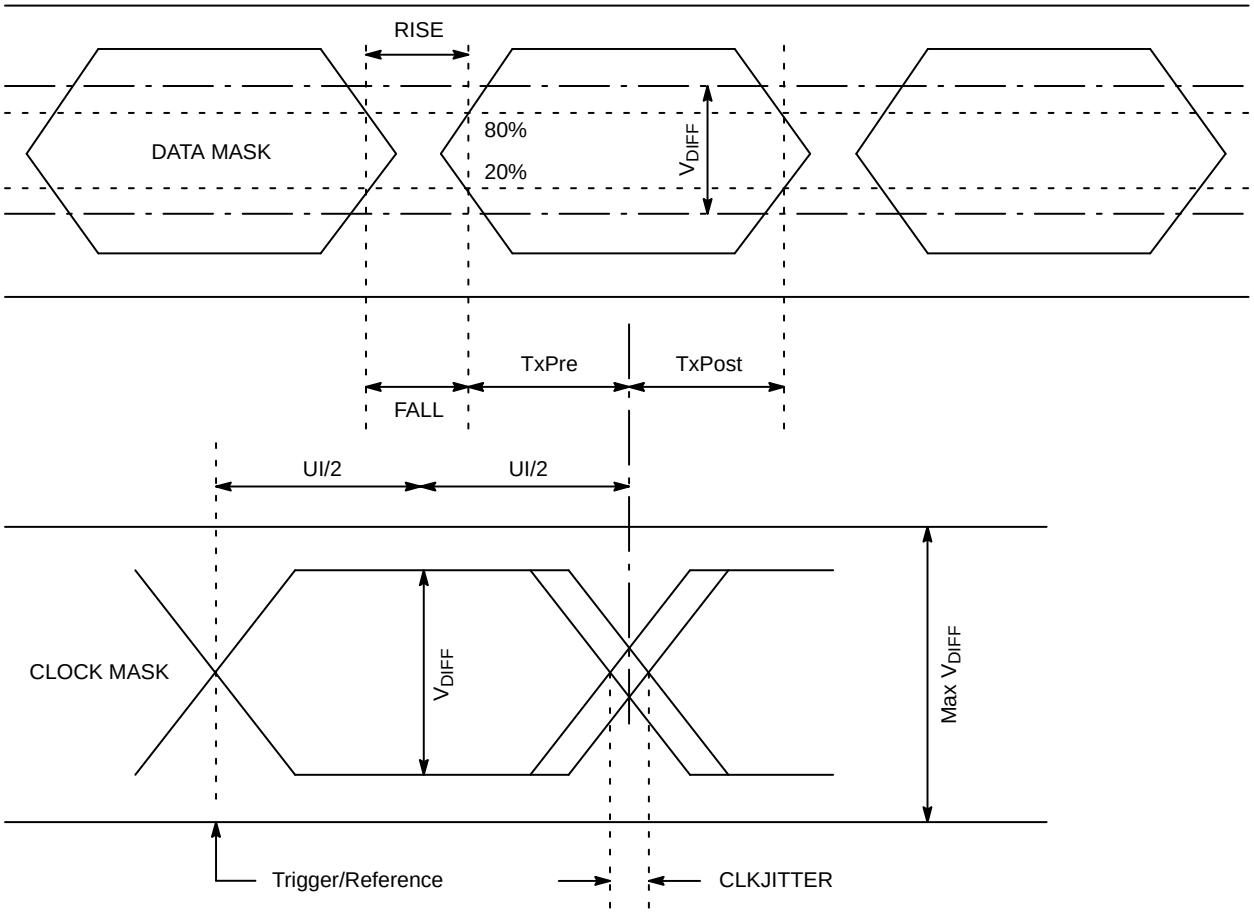

Figure 17. Eye Diagram for Clock and Data Signals

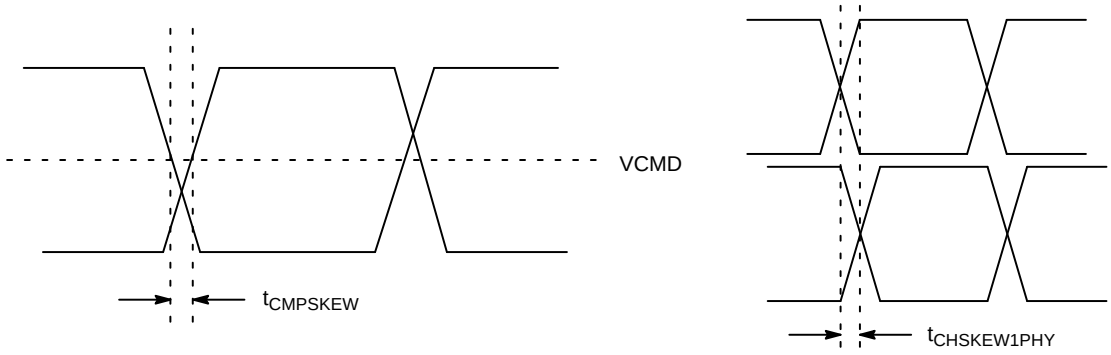

Figure 18. Skew within the PHY and Output Channels

POWER-ON RESET AND STANDBY TIMING

Power-Up Sequence

The recommended power-up sequence for the AR0134CS is shown in Figure 19. The available power supplies (V_{DD}_IO, V_{DD}, V_{DD}_SLVS, V_{DD}_PLL, V_{AA}, V_{AA}_PIX) must have the separation specified below.

1. Turn on V_{DD}_PLL power supply.
2. After 0−10 μs, turn on V_{AA} and V_{AA}_PIX power supply.
3. After 0−10 μs, turn on V_{DD}_IO power supply.
4. After the last power supply is stable, enable EXTCLK.
5. If RESET_BAR is in a LOW state, hold RESET_BAR LOW for at least 1 ms. If RESET_BAR is in a HIGH state, assert RESET_BAR for at least 1 ms.
6. Wait 160000 EXTCLKs (for internal initialization into software standby).
7. Configure PLL, output, and image settings to desired values.
8. Wait 1 ms for the PLL to lock.
9. Set streaming mode (R0x301a[2] = 1).

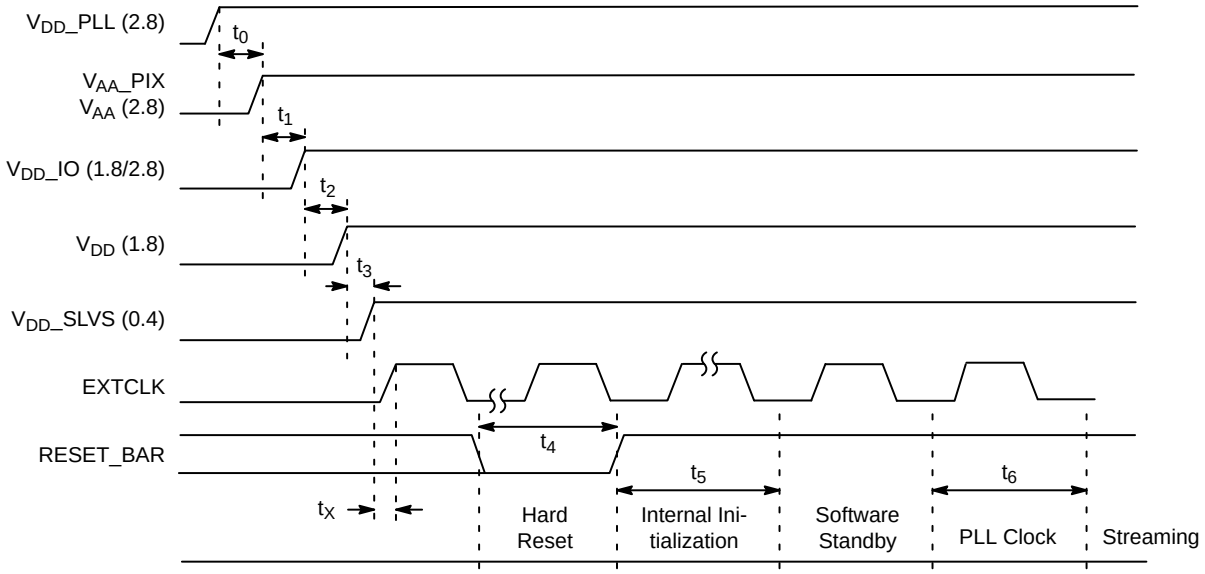

Figure 19. Power Up

Table 18. POWER-UP SEQUENCE

Symbol	Definition	Min	Typ	Max	Unit
t_0	V_{DD}_PLL to V_{AA}/V_{AA}_PIX	0	10	–	μs
t_1	V_{AA}/V_{AA}_PIX to V_{DD}_IO	0	10	–	μs
t_2	V_{DD}_IO to V_{DD}	0	10	–	μs
t_3	V_{DD} to V_{DD}_SLVS	0	10	–	μs
t_X	Xtal Settle Time	–	30 (Note 23)	–	ms
t_4	Hard Reset	1 (Note 24)	–	–	ms
t_5	Internal Initialization	160000	–	–	EXTCLKs
t_6	PLL Lock Time	1	–	–	ms

23. Xtal settling time is component-dependent, usually taking about 10–100 ms.
24. Hard reset time is the minimum time required after power rails are settled. In a circuit where hard reset is held down by RC circuit, then the RC time must include the all power rail settle time and Xtal settle time.
25. It is critical that V_{DD}_PLL is not powered up after the other power supplies. It must be powered before or at least at the same time as the others. If the case happens that V_{DD}_PLL is powered after other supplies then the sensor may have functionality issues and will experience high current draw on this supply.

Power-Down Sequence

The recommended power-down sequence for the AR0134CS is shown in Figure 20. The available power supplies (V_{DD}_IO, V_{DD}, V_{DD}_SLVS, V_{DD}_PLL, V_{AA}, V_{AA}_PIX) must have the separation specified below.

1. Disable streaming if output is active by setting standby R0x301a[2] = 0.
2. The soft standby state is reached after the current row or frame, depending on configuration, has ended.
3. Turn off V_{DD}_SLVS.
4. Turn off V_{DD}.
5. Turn off V_{DD}_IO.
6. Turn off V_{AA}/V_{AA}_PIX.
7. Turn off V_{DD}_PLL.

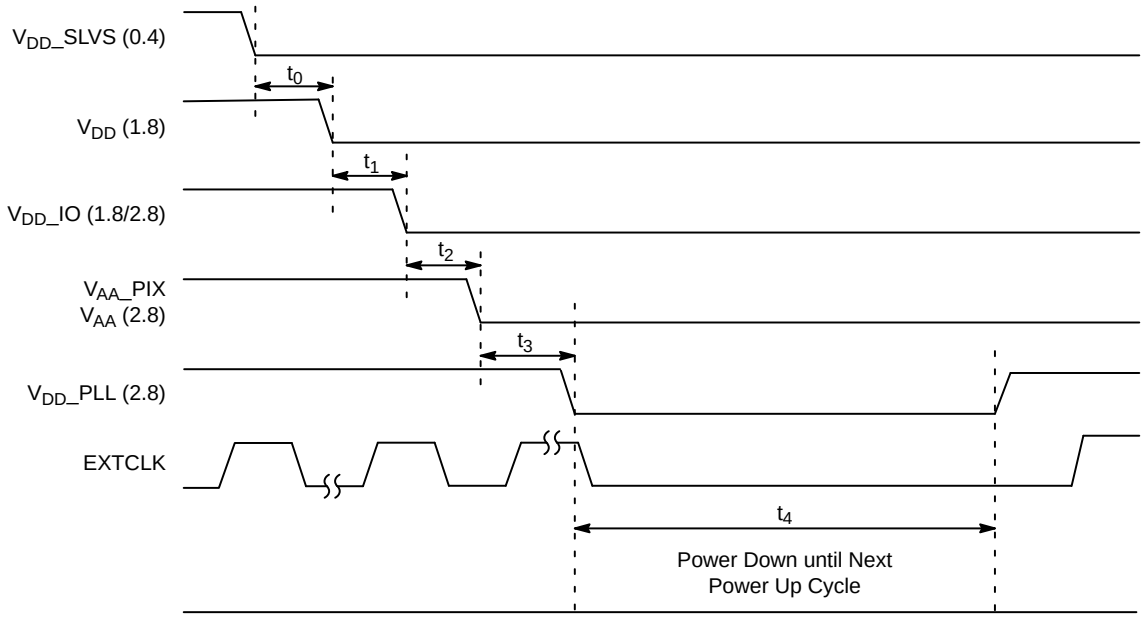

Figure 20. Power Down

Table 19. POWER-DOWN SEQUENCE

Symbol	Parameter	Min	Typ	Max	Unit
t_0	V_{DD}_SLVS to V_{DD}	0	–	–	µs
t_1	V_{DD} to V_{DD}_IO	0	–	–	µs
t_2	V_{DD}_IO to V_{AA}/V_{AA}_PIX	0	–	–	µs
t_3	V_{AA}/V_{AA}_PIX to V_{DD}_PLL	0	–	–	µs
t_4	PwrDn until Next PwrUp Time	100	–	–	ms

26. t_4 is required between power down and next power up time; all decoupling caps from regulators must be completely discharged.

Standby Sequence

Figure 21 and Figure 22 show timing diagrams for entering and exiting standby. Delays are shown indicating the last valid register write prior to entering standby as well as the first valid write upon exiting standby. Also shown is timing if the EXTCLK is to be disabled during standby.

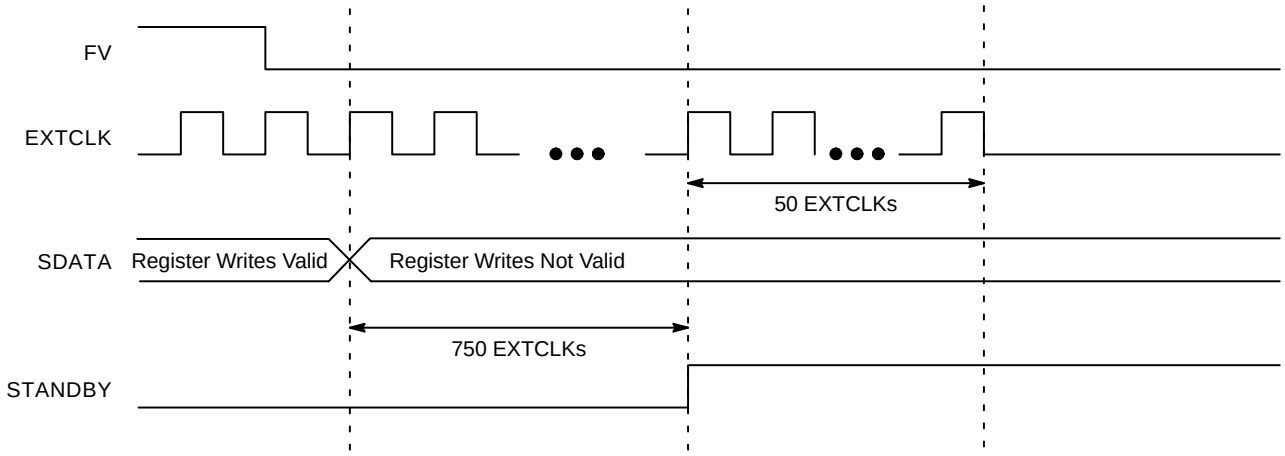

Figure 21. Enter Standby Timing

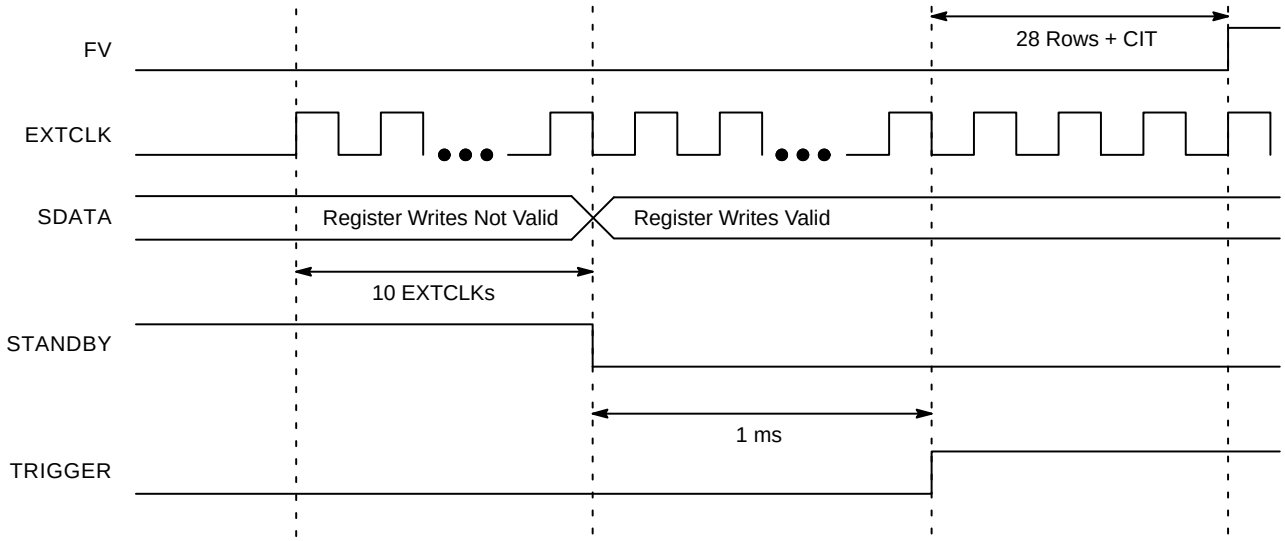

Figure 22. Exit Standby Timing

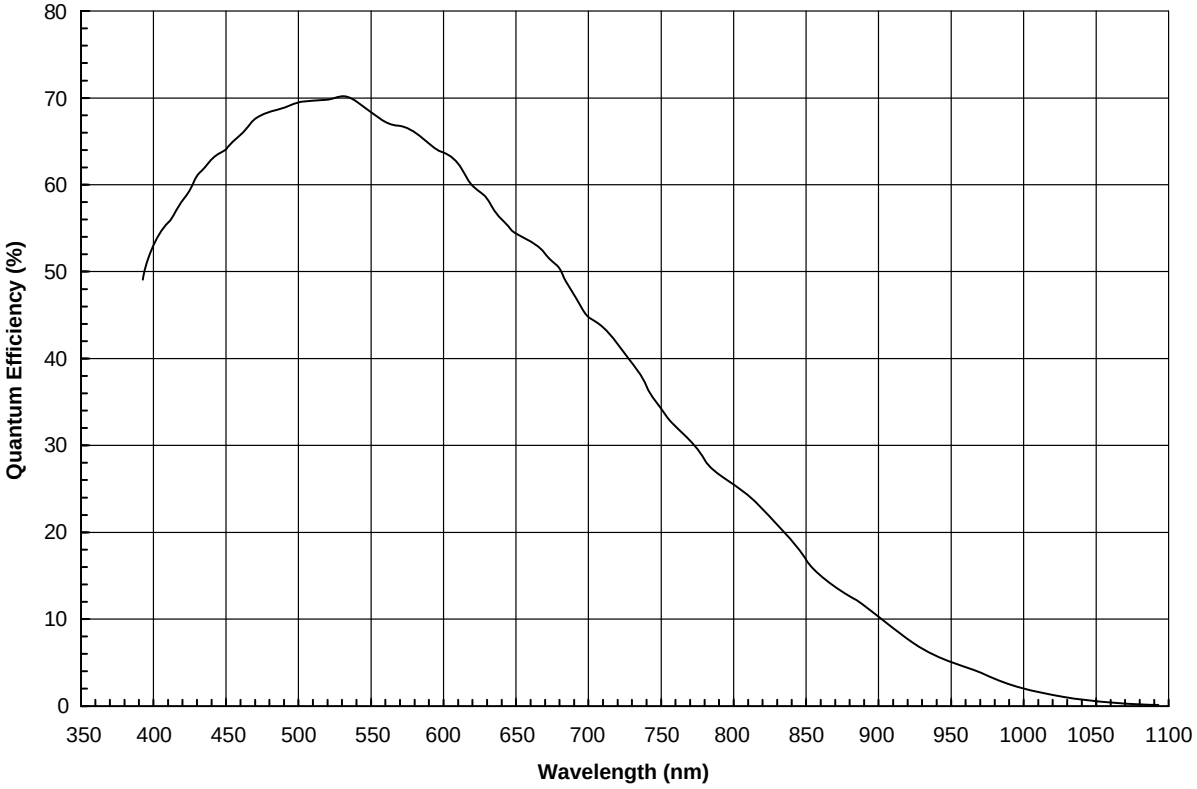

Figure 23. Quantum Efficiency − Monochrome Sensor (Typical)

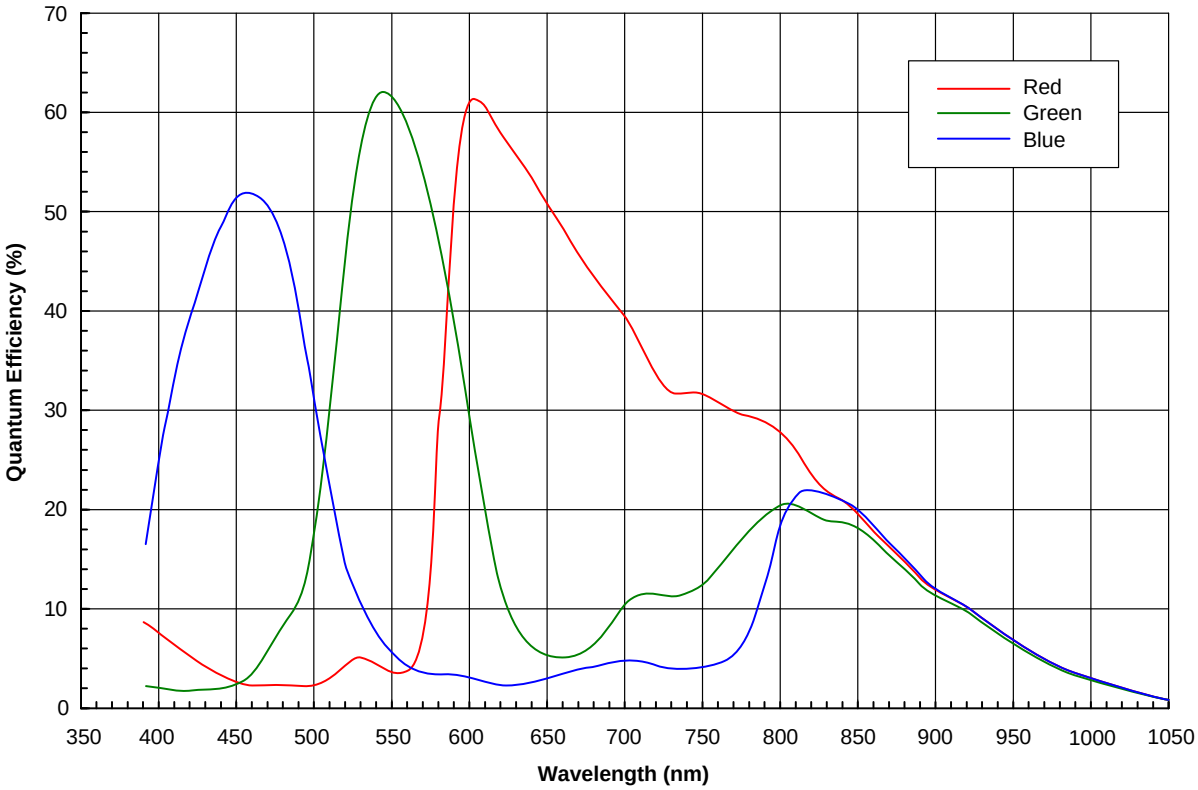

Figure 24. Quantum Efficiency − Color Sensor (Typical)

CRA vs. Image Height Plot

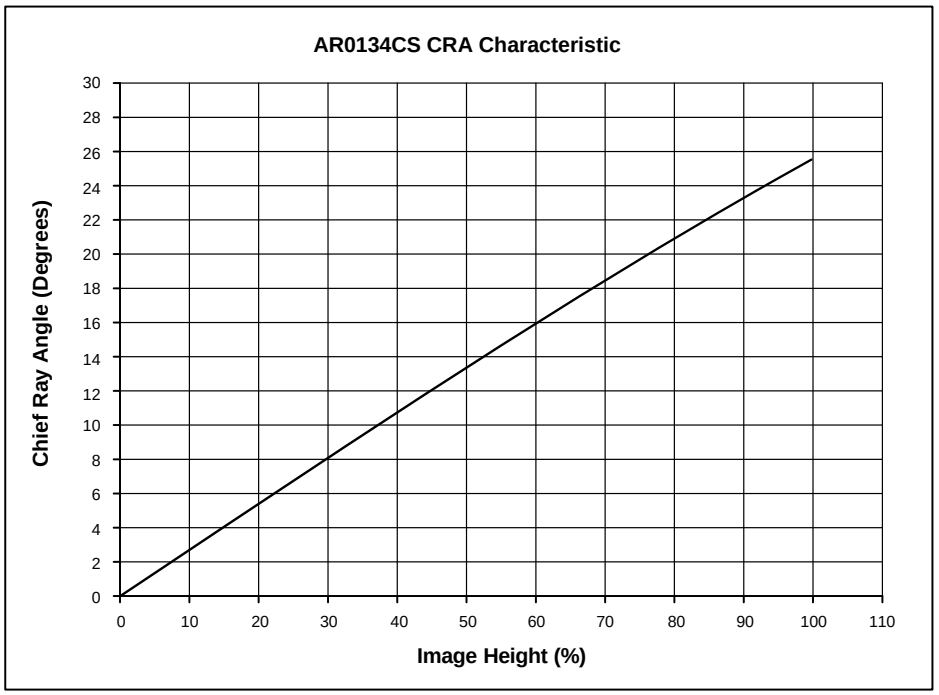

Figure 25. Chief Ray Angle − 25° Mono

Image Height		CRA
(%)	(mm)	(deg)
0	0	0
5	0.150	1.35
10	0.300	2.70
15	0.450	4.04
20	0.600	5.39
25	0.750	6.73
30	0.900	8.06
35	1.050	9.39
40	1.200	10.71
45	1.350	12.02
50	1.500	13.33
55	1.650	14.62
60	1.800	15.90
65	1.950	17.16
70	2.100	18.41
75	2.250	19.64
80	2.400	20.85
85	2.550	22.05
90	2.700	23.22
95	2.850	24.38
100	3.000	25.51

PACKAGE DIMENSIONS

IBGA63 9x9
CASE 503AG
ISSUE O

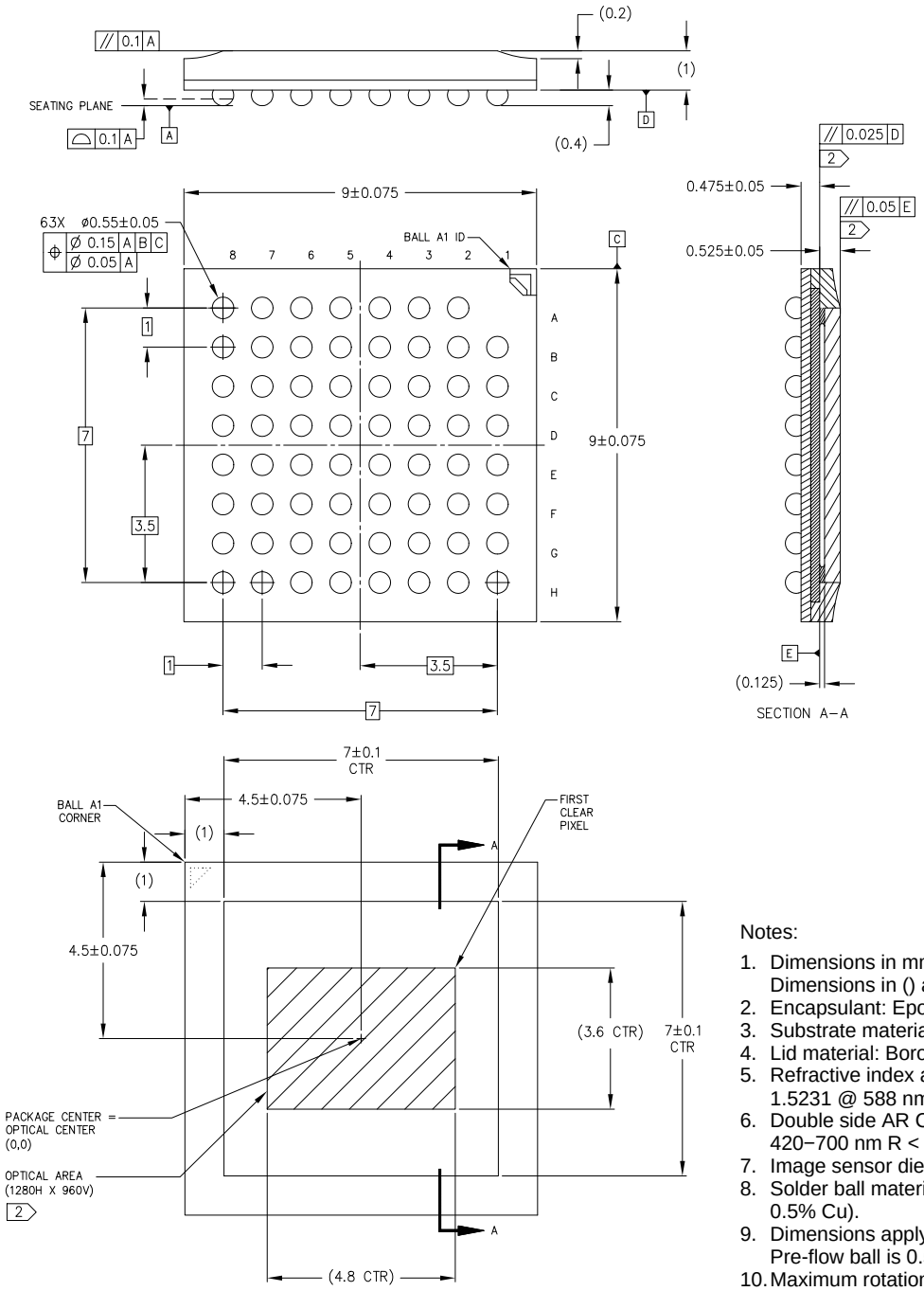

NOTES	
1	DIMENSIONS IN MM. DIMENSIONS IN ( ) ARE FOR REFERENCE ONLY.
2	MAXIMUM ROTATION OF OPTICAL AREA RELATIVE TO PACKAGE EDGES: 1°. MAXIMUM TILT OF OPTICAL AREA RELATIVE TO SUBSTRATE PLANE D: 25 MICRONS. MAXIMUM TILT OF COVER GLASS RELATIVE TO OPTICAL AREA PLANE E: 50 MICRONS.

Notes:

1. Dimensions in mm.
   Dimensions in () are for reference only.
2. Encapsulant: Epoxy.
3. Substrate material: Plastic laminate 0.25 thickness.
4. Lid material: Borosilicate glass 0.4 ±0.04 thickness.
5. Refractive index at 20C = 1.5255 @ 546 nm and 1.5231 @ 588 nm.
6. Double side AR Coating: 530−570 nm R< 1%; 420−700 nm R < 2%.
7. Image sensor die: 0.2 mm thickness.
8. Solder ball material: SAC305 (95% Sn, 3% Ag, 0.5% Cu).
9. Dimensions apply to solder balls post reflow. Pre-flow ball is 0.5 on a ∅0.4 SMD ball pad.
10. Maximum rotation of optical area relative to package edges: 1°.
11. Maximum tilt of optical area relative to substrate plane D: 25 μm.
12. Maximum tilt of cover glass relative to optical area plane E: 50 μm.

PACKAGE DIMENSIONS

ILCC48 10x10
CASE 847AE
ISSUE O

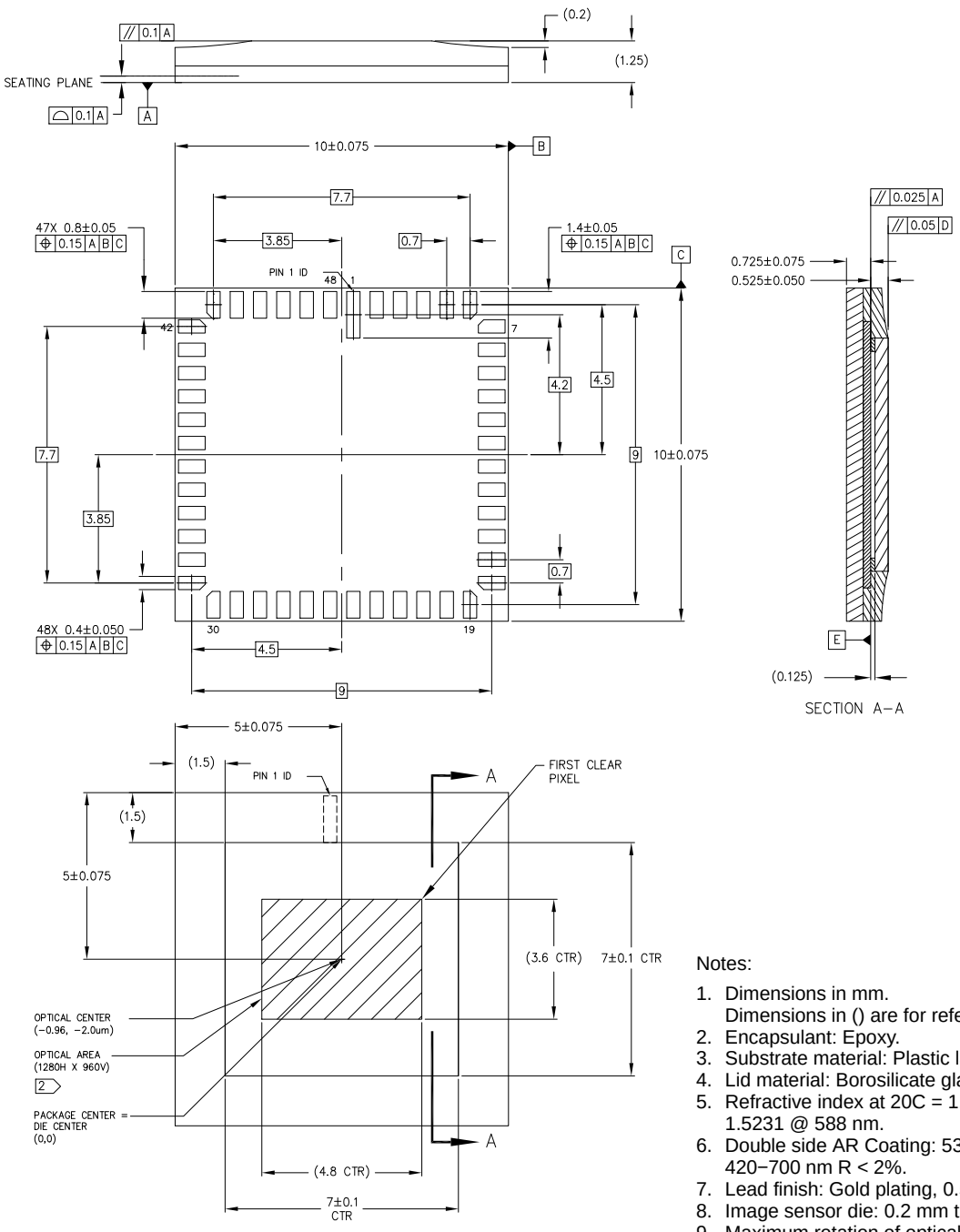

NOTES	
1	DIMENSIONS IN MM. DIMENSIONS IN ( ) ARE FOR REFERENCE ONLY.
2	MAXIMUM ROTATION OF OPTICAL AREA RELATIVE TO PACKAGE EDGES: 0.75°. MAXIMUM TILT OF OPTICAL AREA RELATIVE TO SUBSTRATE PLANE D: 25 MICRONS MAXIMUM TILT OF COVER GLASS RELATIVE TO OPTICAL AREA PLANE E: 50 MICRONS.

Notes:

1. Dimensions in mm.
   Dimensions in () are for reference only.
2. Encapsulant: Epoxy.
3. Substrate material: Plastic laminate 0.25 thickness.
4. Lid material: Borosilicate glass 0.4 ±0.04 thickness.
5. Refractive index at 20C = 1.5255 @ 546 nm and 1.5231 @ 588 nm.
6. Double side AR Coating: 530−570 nm R< 1%; 420−700 nm R < 2%.
7. Lead finish: Gold plating, 0.5 μm min. thickness.
8. Image sensor die: 0.2 mm thickness.
9. Maximum rotation of optical area relative to package edges: 0.75°.
10. Maximum tilt of optical area relative to substrate plane D: 25 μm.
11. Maximum tilt of cover glass relative to optical area plane E: 50 μm.

ON Semiconductor and ON are trademarks of Semiconductor Components Industries, LLC dba ON Semiconductor or its subsidiaries in the United States and/or other countries. ON Semiconductor owns the rights to a number of patents, trademarks, copyrights, trade secrets, and other intellectual property. A listing of ON Semiconductor's product/patent coverage may be accessed at www.onsemi.com/site/pdf/Patent−Marking.pdf. ON Semiconductor reserves the right to make changes without further notice to any products herein. ON Semiconductor makes no warranty, representation or guarantee regarding the suitability of its products for any particular purpose, nor does ON Semiconductor assume any liability arising out of the application or use of any product or circuit, and specifically disclaims any and all liability, including without limitation special, consequential or incidental damages. Buyer is responsible for its products and applications using ON Semiconductor products, including compliance with all laws, regulations and safety requirements or standards, regardless of any support or applications information provided by ON Semiconductor. "Typical" parameters which may be provided in ON Semiconductor data sheets and/or specifications can and do vary in different applications and actual performance may vary over time. All operating parameters, including "Typicals" must be validated for each customer application by customer's technical experts. ON Semiconductor does not convey any license under its patent rights nor the rights of others. ON Semiconductor products are not designed, intended, or authorized for use as a critical component in life support systems or any FDA Class 3 medical devices or medical devices with a same or similar classification in a foreign jurisdiction or any devices intended for implantation in the human body. Should Buyer purchase or use ON Semiconductor products for any such unintended or unauthorized application, Buyer shall indemnify and hold ON Semiconductor and its officers, employees, subsidiaries, affiliates, and distributors harmless against all claims, costs, damages, and expenses, and reasonable attorney fees arising out of, directly or indirectly, any claim of personal injury or death associated with such unintended or unauthorized use, even if such claim alleges that ON Semiconductor was negligent regarding the design or manufacture of the part. ON Semiconductor is an Equal Opportunity/Affirmative Action Employer. This literature is subject to all applicable copyright laws and is not for resale in any manner.

PUBLICATION ORDERING INFORMATION

LITERATURE FULFILLMENT:
Literature Distribution Center for ON Semiconductor
19521 E. 32nd Pkwy, Aurora, Colorado 80011 USA
Phone: 303−675−2175 or 800−344−3860 Toll Free USA/Canada
Fax: 303−675−2176 or 800−344−3867 Toll Free USA/Canada
Email: orderlit@onsemi.com

N. American Technical Support: 800−282−9855 Toll Free USA/Canada
Europe, Middle East and Africa Technical Support:
Phone: 421 33 790 2910
Japan Customer Focus Center
Phone: 81−3−5817−1050

ON Semiconductor Website: **www.onsemi.com**

Order Literature: http://www.onsemi.com/orderlit

For additional information, please contact your local Sales Representative