Hall Effect Micro Switch IC

## Features

- **Micro Power Operation for Battery Applications**
- **Chopper Stabilized Amplifier**
- **Independent of North or South Pole Magnet, Easy for Manufacture**
- **Small Size Package**
- **Lead Free and Green Devices Available (RoHS Compliant)**

## Applications

- **Micro Switch**
- **Handheld Wireless Application Wake Up Switch**
- **Clamp Shell Type Application Switch**
- **Magnet Switch in Low Duty Cycle Applications**

## General Description

The APX8131H, integrated circuit, is an ultra-sensitive, pole independent Hall-effect switch with a latched digital output. A 2.5 volt to 3.5 volt operation and an unique clocking scheme reduce the average operating power requirements, either a north or south pole of sufficient flux will turn the output on; in the absence of a magnetic field, the output is off. The polarity independence and minimal power requirement allow this device to be easily replaced reed switch for superior for signal conditioning. Advanced CMOS processing is used to take advantage of low-voltage and low-power requirements, SOT-23 package provided a optimized package for most applications.

## Pin Configuration

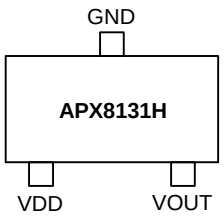


**SOT-23**

## Ordering and Marking Information

| | |
|---|---|
| APX8131H □□-□□□<br>Assembly Material<br>Handling Code<br>Temperature Range<br>Package Code | Package Code<br>A : SOT-23<br>Operating Ambient Temperature Range<br>I : -40 to 85 °C<br>Handling Code<br>TR : Tape & Reel<br>Assembly Material<br>G : Halogen and Lead Free Device |
| APX8131H A: X31X | X - Date Code |

Note: ANPEC lead-free products contain molding compounds/die attach materials and 100% matte tin plate termination finish; which are fully compliant with RoHS. ANPEC lead-free products meet or exceed the lead-free requirements of IPC/JEDEC J-STD-020D for MSL classification at lead-free peak reflow temperature. ANPEC defines “Green” to mean lead-free (RoHS compliant) and halogen free (Br or Cl does not exceed 900ppm by weight in homogeneous material and total of Br and Cl does not exceed 1500ppm by weight).

ANPEC reserves the right to make changes to improve reliability or manufacturability without notice, and advise customers to obtain the latest version of relevant information to verify before placing orders.

## Absolute Maximum Ratings ($T_A$ = 25°C unless otherwise noted)(Note1)

| Symbol | Parameter | Rating | Unit |
|---|---|---|---|
| $V_{DD}$ | Supply Voltage | 5 | V |
| $V_{OUT}$ | Output Voltage | 5 | V |
| $T_J$ | Junction Temperature Range | 150 | °C |
| $T_{STG}$ | Storage Temperature Range | -65 to +150 | |

Note1: Stresses beyond those listed under "absolute maximum ratings" may cause permanent damage to the device. These are stress ratings only and functional operation of the device at these or any other conditions beyond those indicated under "recommended operating conditions" is not implied. Exposure to absolute maximum rating conditions for extended periods may affect device reliability.

## Thermal Characteristics

| Symbol | Parameter | Typical Value | Unit |
|---|---|---|---|
| $\theta_{JA}$ | Junction-to-Ambient Resistance in Free Air (Note 2) SOT-23 | 260 | °C/W |
| $\theta_{JC}$ | Junction-to-Case Resistance in Free Air (Note 2) SOT-23 | 145 | °C/W |
| $P_D$ | Power Dissipation, $T_A$=25°C SOT-23 | 0.385 | W |

Note 2: $\theta_{JA}$ is measured with the component mounted on a high effective thermal conductivity test board in free air.

## Electrical Characteristics ($T_A$ = 25°C, $V_{DD}$=3V unless otherwise noted)

| Symbol | Characteristic | Test Conditions | APX8131H | | | Unit |
|---|---|---|---|---|---|---|
| | | | Min. | Typ. | Max. | |
| $V_{DD}$ | Supply Voltage Range | Operating | 2.5 | - | 3.5 | V |
| $I_{DD}$ | Supply Current | Average | - | 5 | 10 | µA |
| | | Awake | - | 1.2 | 2 | mA |
| | | Sleep | - | 2 | 8 | µA |
| $I_{OFF}$ | Output Leakage Current | $V_{OUT}$ = 3.5V, $B_{RPN}$<B<$B_{RPS}$ | - | - | 1.0 | µA |
| $V_{OL}$ | Output Low Voltage | $I_{SINK}$ = 1mA | - | 20 | 40 | mV |
| $t_{awake}$ | Wake Up Time | | - | 180 | - | µs |
| $t_{period}$ | Period | | - | 60 | 120 | ms |
| d.c. | Duty Cycle | | - | 0.3 | - | % |
| $f_c$ | Chopping Frequency | | - | 11 | - | kHz |

Copyright © ANPEC Electronics Corp.

## Magnetic Characteristics ($T_A$ = 25°C, $V_{DD}$=3V unless otherwise noted)

| Symbol | Characteristic | Test Conditions | APX8131H | | | Unit |
|---|---|---|---|---|---|---|
| | | | Min. | Typ. | Max. | |
| $B_{OPS}$ | Operate Points | | 30 | - | 40 | G |
| $B_{OPN}$ | | | -40 | - | -30 | G |
| $B_{RPS}$ | Release Points | | 10 | - | 30 | G |
| $B_{RPN}$ | | | -30 | - | -10 | G |
| $B_{hys}$ | Hysteresis | | - | 15 | - | G |

## Pin Description

| PIN | | FUNCTION |
|---|---|---|
| NO. | NAME | |
| 1 | VDD | Power Input |
| 2 | VOUT | When a magnetic field enters the hall element and exceeds the operate point BOPS (or less than BOPN), the output turns on (output is low). When the magnetic field is below the release point BRPS (or above BRPN), the output turns off (output is high). It is designed with open drain configuration and connecting a pull up resistor from VOUT to VDD is necessary. It cannot be floating. |
| 3 | GND | Ground Connection. |

Copyright © ANPEC Electronics Corp.

## Block Diagram

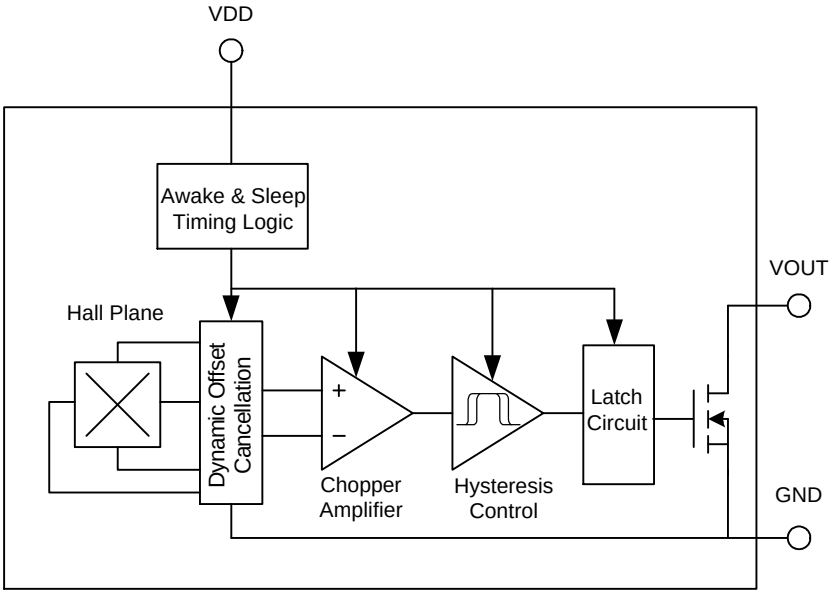


## Typical Application Circuit

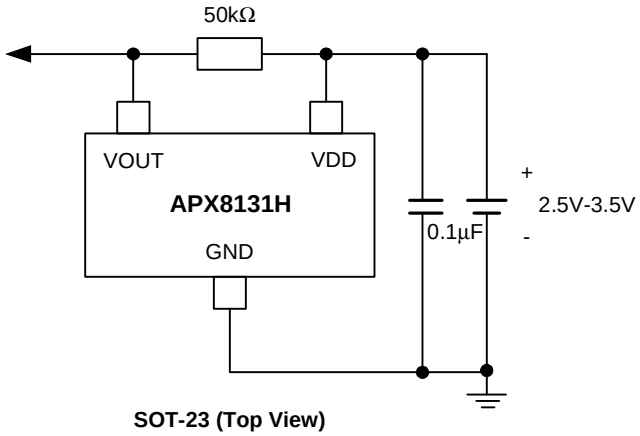


**SOT-23 (Top View)**

## Function Description

### Operation

The output of APX8131H switches low (turns on) when in presence of strong flux density facing the marked side of package exceeds the operate point $B_{OPS}$ (or is less than $B_{OPN}$). After turn-on, the output is capable of sinking up to 1mA and the output voltage is low (turns on). In absence of flux density below the release point $B_{RPS}$ (or increased above $B_{RPN}$), the APX8131A output switches high (turns off). The difference in the magnetic operated and released point is the hysteresis ($B_{hys}$) of the device. This built-in hysteresis allows clean switching of the output even in the presence of external mechanical bouncing vibration and electrical noise.

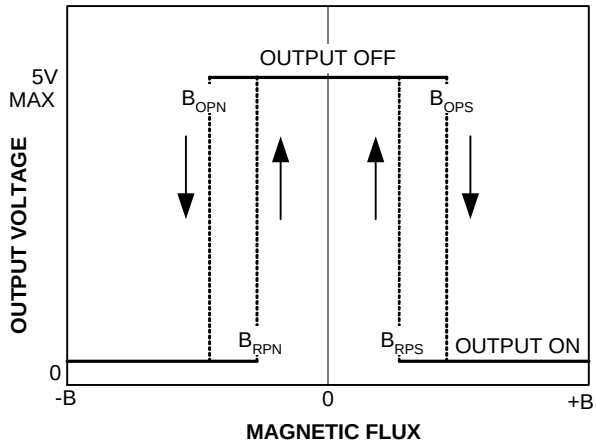

## Application Information

It is strongly recommended that an external bypass capacitor be connected (in close to the Hall sensor) between the supply and the ground of the device to reduce both external noise and noise generated by the chopper-stabilization technique. This is especially true due to the relatively high impedance of battery supplies.The output is an open drain output, it must be connected a pull-up resistor to a supply voltage which is lower than 5V, connect a 50kΩ resistor to VDD in common use.

**Pole-Independent**

The pole-independent sensing technique allows for operation with either a north or south pole magnet orientation, enhancing the manufacturability of the device. The state-of-the-art technology provides the same output polarity for either pole in presence.

**Awake & Sleep**

Internal awake & sleep timing block circuit activates the sensor for 180μs and deactivates it for the remainder of the period (60ms). A short “awake” time allows for stabilization prior to the sensor sampling and data latching on the falling edge of the timing pulse. While in sleep cycle, the output is latched in its previous state.

**Chopper Stabilized Technique**

The chopper stabilized technique cancels the mismatching of the hall element, the amplifier offset voltage and temperature sensitive drift by the dynamic offset cancellation and switched capacitor technique. This technique produces devices have an extremely stable Hall output voltage, therefore, the magnetic switch points are stable.

**Recommended Minimum Footprint**

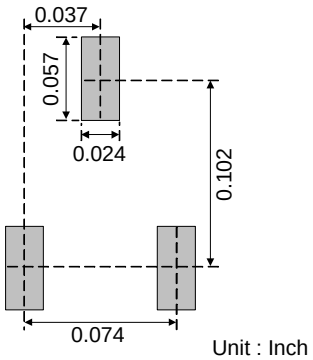


Unit : Inch

**SOT-23-3**

## Package Information

**SOT-23**

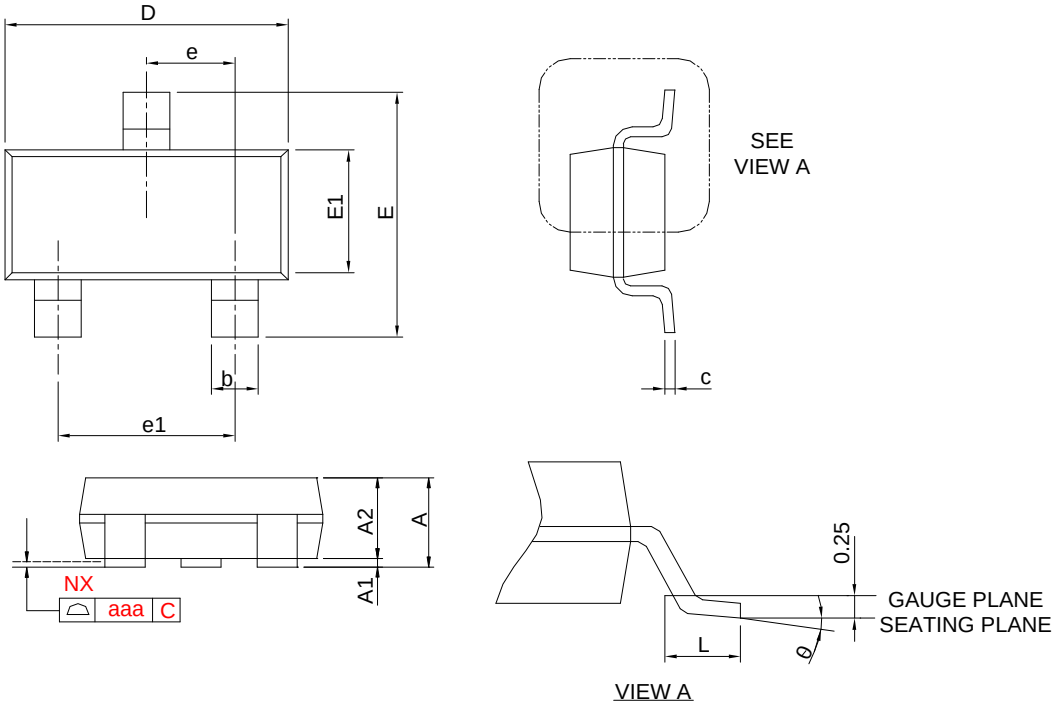


| SYMBOL | SOT-23 | | | |
|---|---|---|---|---|
| | MILLIMETERS | | INCHES | |
| | MIN. | MAX. | MIN. | MAX. |
| A | | 1.45 | | 0.057 |
| A1 | 0.00 | 0.15 | 0.000 | 0.006 |
| A2 | 0.90 | 1.30 | 0.035 | 0.051 |
| b | 0.30 | 0.50 | 0.012 | 0.020 |
| c | 0.08 | 0.22 | 0.003 | 0.009 |
| D | 2.70 | 3.10 | 0.106 | 0.122 |
| E | 2.60 | 3.00 | 0.102 | 0.118 |
| E1 | 1.40 | 1.80 | 0.055 | 0.071 |
| e | 0.95 BSC | | 0.037 BSC | |
| e1 | 1.90 BSC | | 0.075 BSC | |
| L | 0.30 | 0.60 | 0.012 | 0.024 |
| θ | 0° | 8° | 0° | 8° |
| aaa | 0.10 | | 0.004 | |

Note : Dimension D and E1 do not include mold flash, protrusions or gate burrs. Mold flash, protrusion or gate burrs shall not exceed 10 mil per side.

Copyright © ANPEC Electronics Corp.

## Carrier Tape & Reel Dimensions

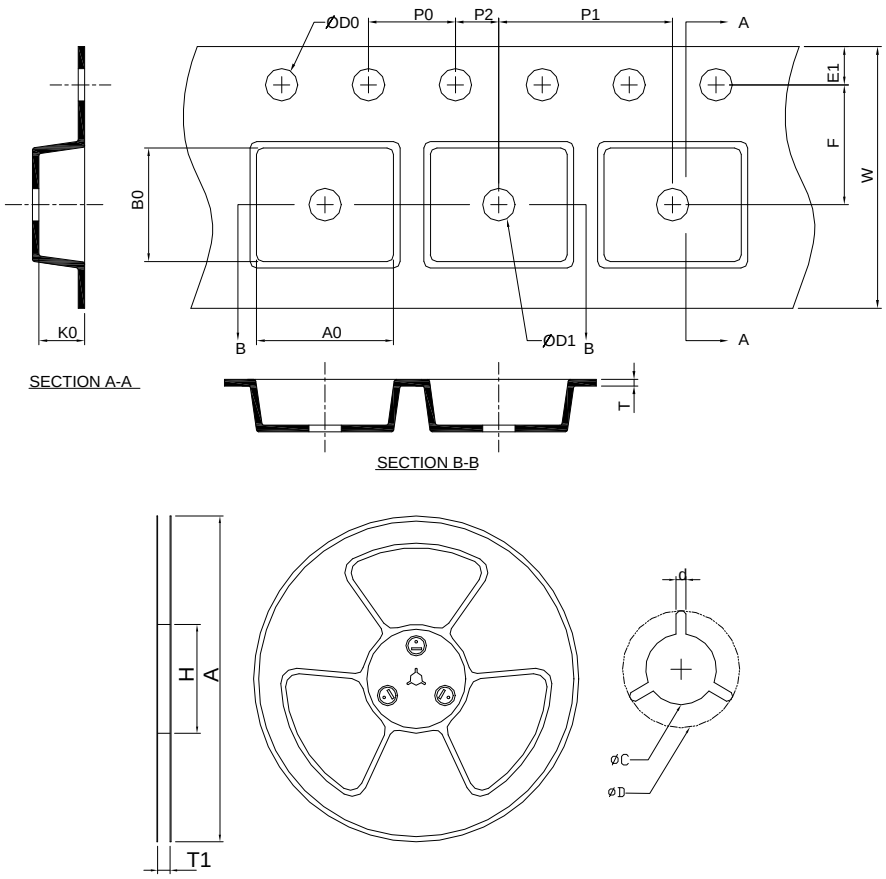


| Application | A | H | T1 | C | d | D | W | E1 | F |
|---|---|---|---|---|---|---|---|---|---|
| SOT-23 | 178.0±2.00 | 50 MIN. | 8.4+2.00 -0.00 | 13.0+0.50 -0.20 | 1.5 MIN. | 20.2 MIN. | 8.0±0.30 | 1.75±0.10 | 3.5±0.05 |
| | **P0** | **P1** | **P2** | **D0** | **D1** | **T** | **A0** | **B0** | **K0** |
| | 4.0±0.10 | 4.0±0.10 | 2.0±0.05 | 1.5+0.10 -0.00 | 1.0 MIN. | 0.6+0.00 -0.40 | 3.20±0.20 | 3.10±0.20 | 1.50±0.20 |

(mm)

## Devices Per Unit

| Package Type | Unit | Quantity |
|---|---|---|
| **SOT-23** | Tape & Reel | 3000 |

Copyright © ANPEC Electronics Corp.

## Taping Direction Information

**SOT-23**

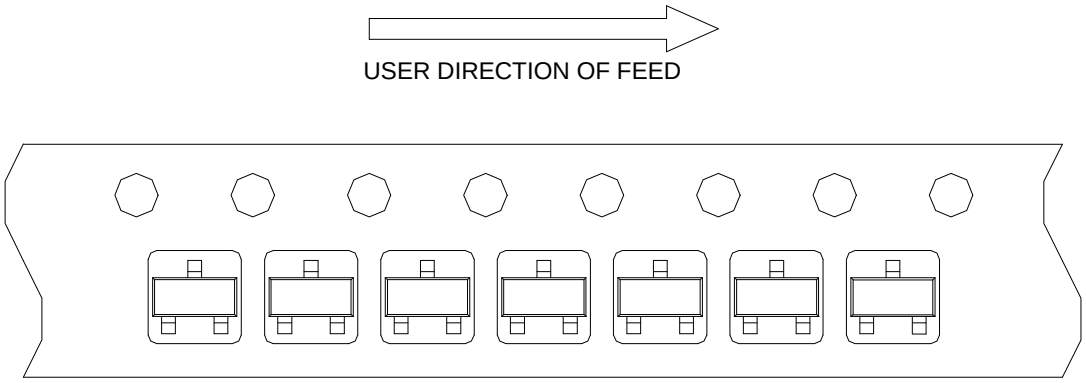


## Classification Profile

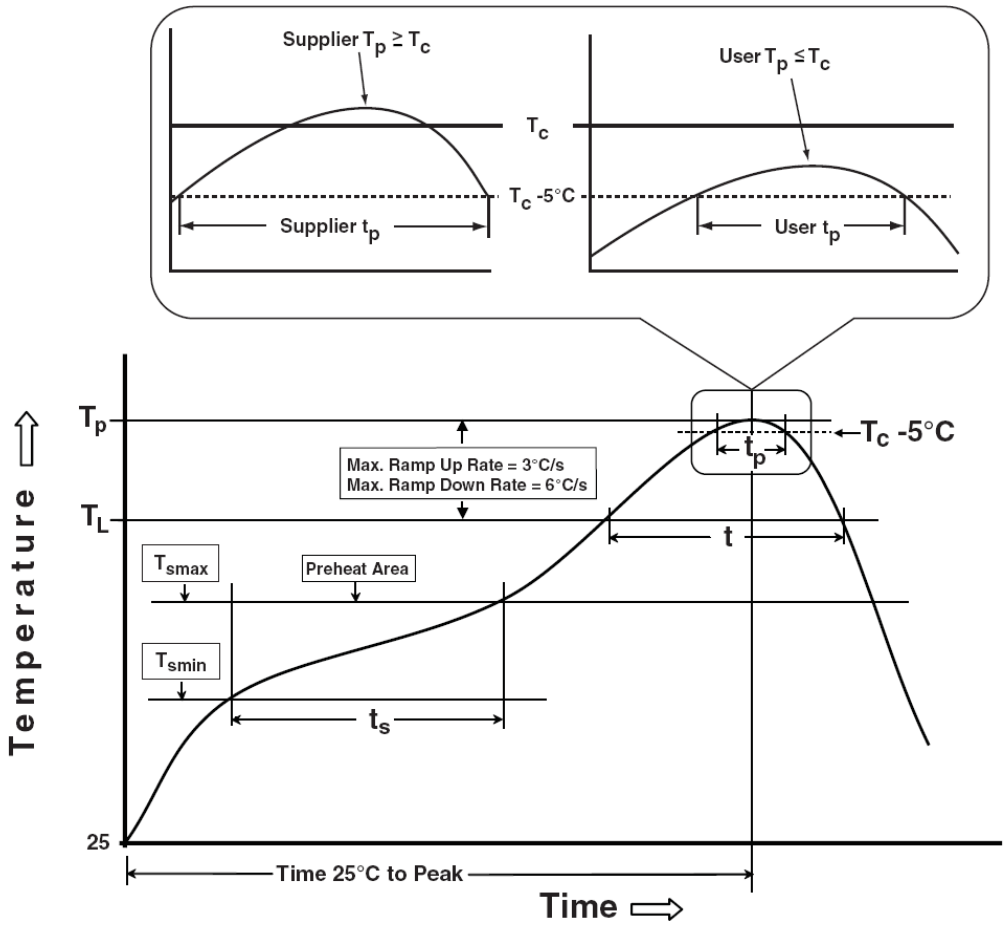

## Classification Reflow Profiles

| Profile Feature | Sn-Pb Eutectic Assembly | Pb-Free Assembly |
|---|---|---|
| **Preheat & Soak**<br>Temperature min ($T_{smin}$)<br>Temperature max ($T_{smax}$)<br>Time ($T_{smin}$ to $T_{smax}$) ($t_s$) | <br>100 °C<br>150 °C<br>60-120 seconds | <br>150 °C<br>200 °C<br>60-120 seconds |
| Average ramp-up rate ($T_{smax}$ to $T_P$) | 3 °C/second max. | 3°C/second max. |
| Liquidous temperature ($T_L$)<br>Time at liquidous ($t_L$) | 183 °C<br>60-150 seconds | 217 °C<br>60-150 seconds |
| Peak package body Temperature ($T_p$)* | See Classification Temp in table 1 | See Classification Temp in table 2 |
| Time ($t_P$)** within 5°C of the specified classification temperature ($T_c$) | 20** seconds | 30** seconds |
| Average ramp-down rate ($T_p$ to $T_{smax}$) | 6 °C/second max. | 6 °C/second max. |
| Time 25°C to peak temperature | 6 minutes max. | 8 minutes max. |
| * Tolerance for peak profile Temperature ($T_p$) is defined as a supplier minimum and a user maximum.<br>** Tolerance for time at peak profile temperature ($t_p$) is defined as a supplier minimum and a user maximum. | | |

Table 1. SnPb Eutectic Process – Classification Temperatures (Tc)

| Package Thickness | Volume $mm^3$ <350 | Volume $mm^3$ ³350 |
|---|---|---|
| <2.5 mm | 235 °C | 220 °C |
| ≥2.5 mm | 220 °C | 220 °C |

Table 2. Pb-free Process – Classification Temperatures (Tc)

| Package Thickness | Volume $mm^3$ <350 | Volume $mm^3$ 350-2000 | Volume $mm^3$ >2000 |
|---|---|---|---|
| <1.6 mm | 260 °C | 260 °C | 260 °C |
| 1.6 mm – 2.5 mm | 260 °C | 250 °C | 245 °C |
| ≥2.5 mm | 250 °C | 245 °C | 245 °C |

## Reliability Test Program

| Test item | Method | Description |
|---|---|---|
| SOLDERABILITY | JESD-22, B102 | 5 Sec, 245°C |
| HOLT | JESD-22, A108 | 1000 Hrs, Bias @ Tj=125°C |
| PCT | JESD-22, A102 | 168 Hrs, 100%RH, 2atm, 121°C |
| TCT | JESD-22, A104 | 500 Cycles, -65°C~150°C |
| ESD | MIL-STD-883-3015.7 | VHBM≧2KV, VMM≧200V |
| Latch-Up | JESD 78 | 10ms, $1_{tr}$≧100mA |

Copyright © ANPEC Electronics Corp.

## Customer Service

**Anpec Electronics Corp.**
Head Office :
No.6, Dusing 1st Road, SBIP,
Hsin-Chu, Taiwan
Tel : 886-3-5642000
Fax : 886-3-5642050

Taipei Branch :
2F, No. 11, Lane 218, Sec 2 Jhongsing Rd.,
Sindian City, Taipei County 23146, Taiwan
Tel : 886-2-2910-3838
Fax : 886-2-2917-3838