APX1117

1A LOW DROPOUT POSITIVE ADJUSTABLE OR FIXED-MODE REGULATOR

Features

- 1.3V Maximum Dropout at Full Load Current
- Fast Transient Response
- Output Current Limiting
- Built-in Thermal Shutdown
- Good Noise Rejection
- 3-Terminal Adjustable or Fixed 1.8V, 2.5V, 3.3V
- SOT223-3L and TO252-3L, Packages in "Green" Molding Compound (No Br, Sb)
- Lead Free Finish / RoHS Compliant (Note 1)

General Description

APX1117 is a low dropout positive adjustable or fixed-mode voltage regulator with 1A output current capability. The product is specifically designed to provide well-regulated supply for applications such as high-speed bus termination and low current 3.3V logic supply. APX1117 is also well suited for other applications such as VGA cards. APX1117 is guaranteed to have lower than 1.3V dropout at full load current making it ideal to provide well-regulated outputs of 1.25V to 5.0V with 6.3V to 18V input supply.

Applications

- PC Peripheral
- Communication

Ordering Information

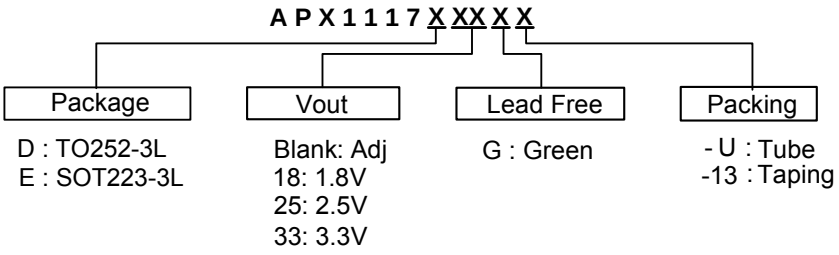

Note: 1. RoHS revision 13.2.2003. Glass and High Temperature Solder Exemptions Applied, see *EU Directive Annex Notes 5 and 7.*

Device	Package Code	Packaging (Note 2)	Tube		13" Tape and Reel	
			Quantity	Part Number Suffix	Quantity	Part Number Suffix
APX1117D	D	TO252-3L	80	-U	2500/Tape & Reel	-13
APX1117E	E	SOT223-3L	75	-U	2500/Tape & Reel	-13

Note: 2. Pad layout as shown on Diodes Inc. suggested pad layout document AP02001, which can be found on our website at http://www.diodes.com/datasheets/ap02001.pdf.

© Diodes Incorporated

Pin Assignments

(1) TO252-3L

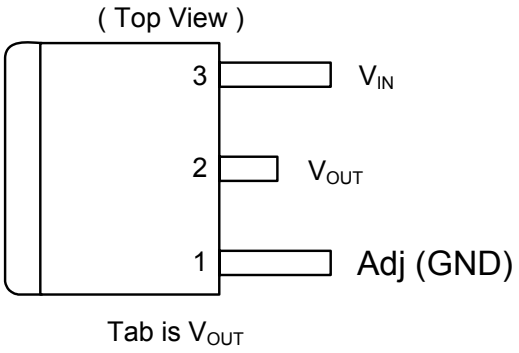

(2) SOT223-3L

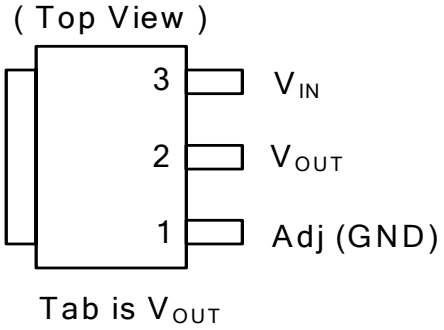

Pin Descriptions

Name	I/O	PIN #	Descripitions
Adj (GND)	I	1	A resistor divider from this pin to the V_{OUT} pin and ground sets the output voltage (Ground only for Fixed-Mode).
V_{OUT}	O	2	The output of the regulator. A minimum of 10uF capacitor (0.15Ω ≤ ESR ≤ 20Ω) must be connected from this pin to ground to insure stability.
V_{IN}	I	3	The input pin of regulator. Typically a large storage capacitor (0.15Ω ≤ ESR ≤ 20Ω) is connected from this pin to ground to insure that the input voltage does not sag below the minimum dropout voltage during the load transient response. This pin must always be 1.3V higher than V_{OUT} in order for the device to regulate properly.

© Diodes Incorporated

Block Diagram

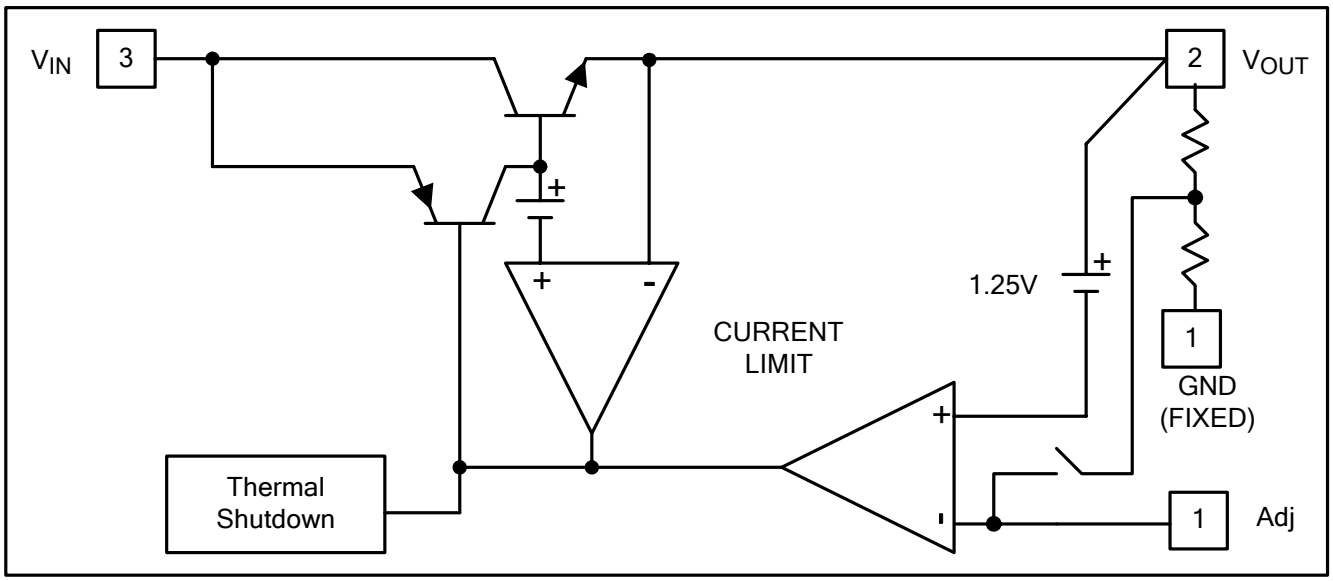

Absolute Maximum Ratings

Symbol	Parameter	Rating	Unit
V_{IN}	DC Supply Voltage	-0.3 to 18	V
T_J	Operating Junction Temperature Range	0 to +125	°C
T_{MJ}	Maximum Junction Temperature	150	°C
P_D	Power Dissipation SOT223-3L TO252-3L	Internally limited by maximum junction temperature of 150°C (Note 3)	mW
T_{ST}	Storage Temperature	-65 to +150	°C

Note: 3. APX1117 contains an internal thermal limiting circuit that is designed to protect the regulator in the event that the maximum junction temperature is exceeded. When activated, typically at 150°C, the regulator output switches off and then back on as the die cools.

© Diodes Incorporated

Electrical Characteristics (Under Operating Conditions)

Parameter	Conditions		Min	TYP.	Max	Unit
Reference Voltage	APX1117-ADJ	T_A = 25°C, (V_{IN}-V_{OUT}) = 1.5V I_O = 10mA	1.225	1.250	1.275	V
	APX1117-1.8	I_{OUT} = 10mA, T_A = 25°C, 3.3V≦V_{IN}≦12V	1.764	1.800	1.836	V
	APX1117-2.5	I_{OUT} = 10mA, T_A = 25°C, 4V≦V_{IN}≦12V	2.450	2.500	2.550	V
	APX1117-3.3	I_{OUT} = 10mA, T_A = 25°C, 4.8V≦V_{IN}≦12V	3.235	3.300	3.365	V
Line Regulation	APX1117-XXX	I_O = 10mA,V_{OUT}+1.5V<V_{IN}<12V, T_A = 25°C			0.2	%
Load Regulation	APX1117-ADJ	V_{IN}=3.3V,Vadj=0,0mA<Io<1A, T_A = 25°C (Note 4, 5)			1	%
	APX1117-1.8	V_{IN} = 3.3V, 0mA<Io<1A, T_A = 25°C (Note 4, 5)		15	18	mV
	APX1117-2.5	V_{IN} = 4V, 0mA<Io<1A, T_A = 25°C (Note 4, 5)		20	25	mV
	APX1117-3.3	V_{IN} = 5V, 0≦I_{OUT}≦1A, T_A = 25°C (Note 4, 5)		26	33	mV
Dropout Voltage (V_{IN}-V_{OUT})	APX1117-ADJ/1.8/2.5/3.3	I_{OUT} = 1A (Note 6)			1.3	V
Current Limit	APX1117-ADJ/1.8/2.5/3.3	(V_{IN}-V_{OUT}) = 5V	1. 1			A
Minimum Load Current (Note 7)	APX1117-XXX	0°C≦T_J≦125°C		5	10	mA
Thermal Regulation	T_A = 25°C, 30ms pulse			0.008	0.04	%/W
Ripple Rejection	F = 180Hz, C_{OUT} = 25uF Tantalum, I_{OUT} = 1A					
	APX1117-XXX	V_{IN} = V_{OUT}+3V		60	70	dB
Temperature Stability	I_O = 10mA			0.5		%
θ_{JA} Thermal Resistance Junction-to-Ambient	SOT223-3L: Control Circuitry/Power Transistor (Note 8) TO252-3L: Control Circuitry/Power Transistor (Note 9)			107 73		°C/W
θ_{JC} Thermal Resistance Junction-to-Case	SOT223-3L: Control Circuitry/Power Transistor (Note 8) TO252-3L: Control Circuitry/Power Transistor (Note 9)			12 16		°C/W

Note: 4. See thermal regulation specifications for changes in output voltage due to heating effects. Line and load regulation are measured at a constant junction temperature by low duty cycle pulse testing. Load regulation is measured at the output lead = 1/18" from the package.

5. Line and load regulation are guaranteed up to the maximum power dissipation of 15W. Power dissipation is determined by the difference between input and output differential and the output current. Guaranteed maximum power dissipation will not be available over the full input/output range.

6. ΔV_{OUT} = 100mV

7. Quiescent current is defined as the minimum output current required in maintaining regulation. At 12V input/output differential the device is guaranteed to regulate if the output current is greater than 10mA.

8. Test condition for SOT223-3L: T_A=27°C, no air flow, 2 oz copper, 5mmX5mm pad.

9. Test condition for TO252-3L: T_A=27°C, no air flow, 2 oz copper, 5mmX5mm pad.

© Diodes Incorporated

Typical Performance Characteristics

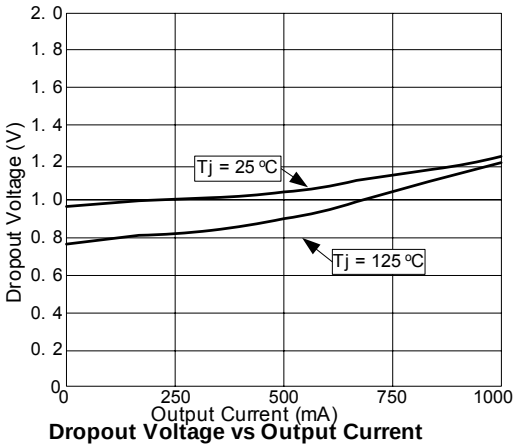

Dropout Voltage vs Output Current

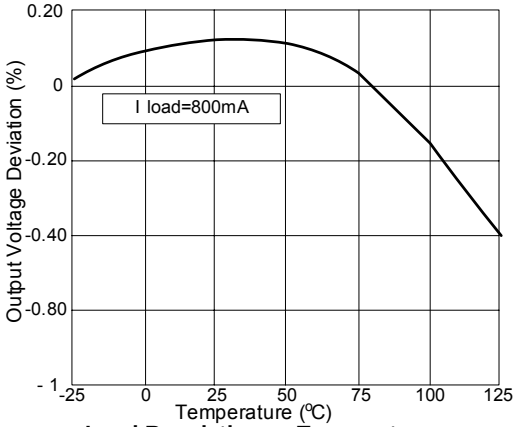

Load Regulation vs Temperature

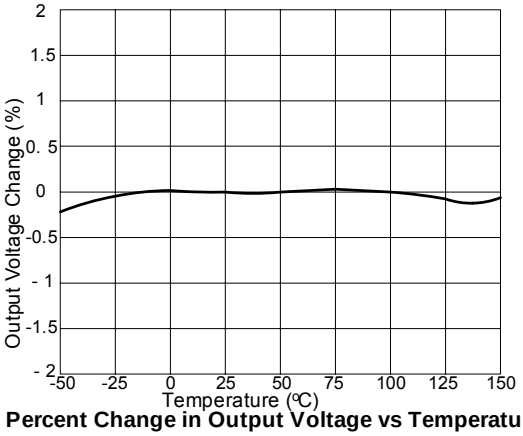

Percent Change in Output Voltage vs Temperature

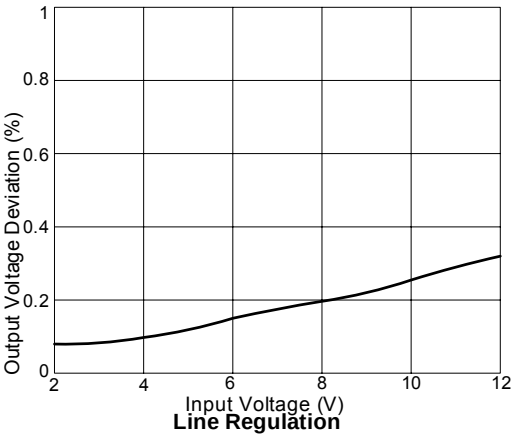

Line Regulation

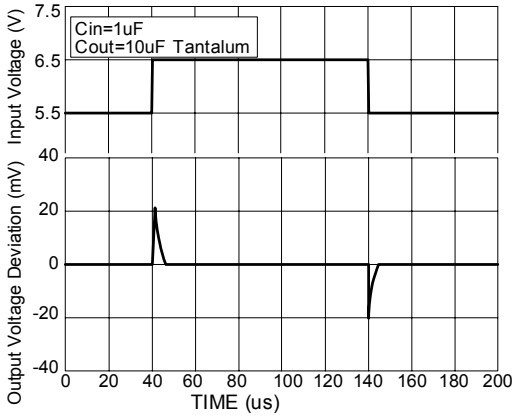

Line Transient Response

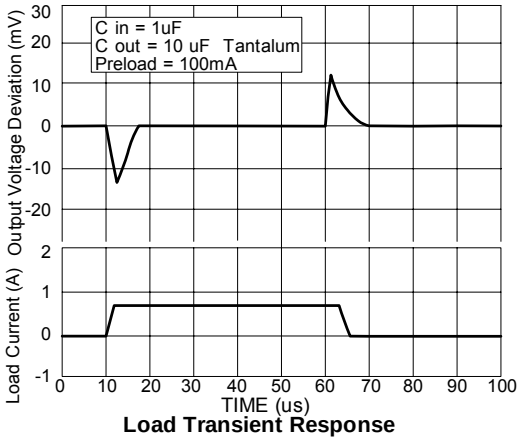

Load Transient Response

© Diodes Incorporated

Typical Application Circuit

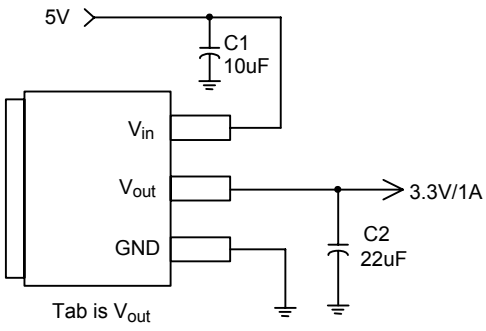

(5V/3.3V fixed output)

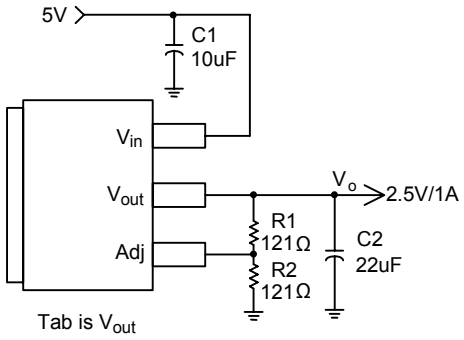

(5V/2.5V ADJ output)

Note: $V_o = V_{REF} * (1 + \frac{R_2}{R_1})$

Marking Information

(1) TO252-3L

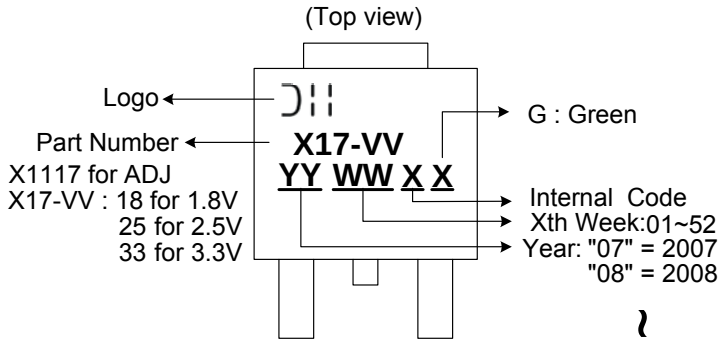

(2) SOT223-3L

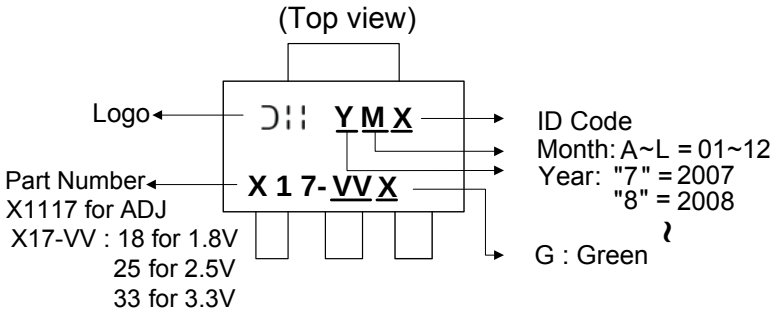

© Diodes Incorporated

Package Information (All Dimensions in mm)

(1) TO252-3L

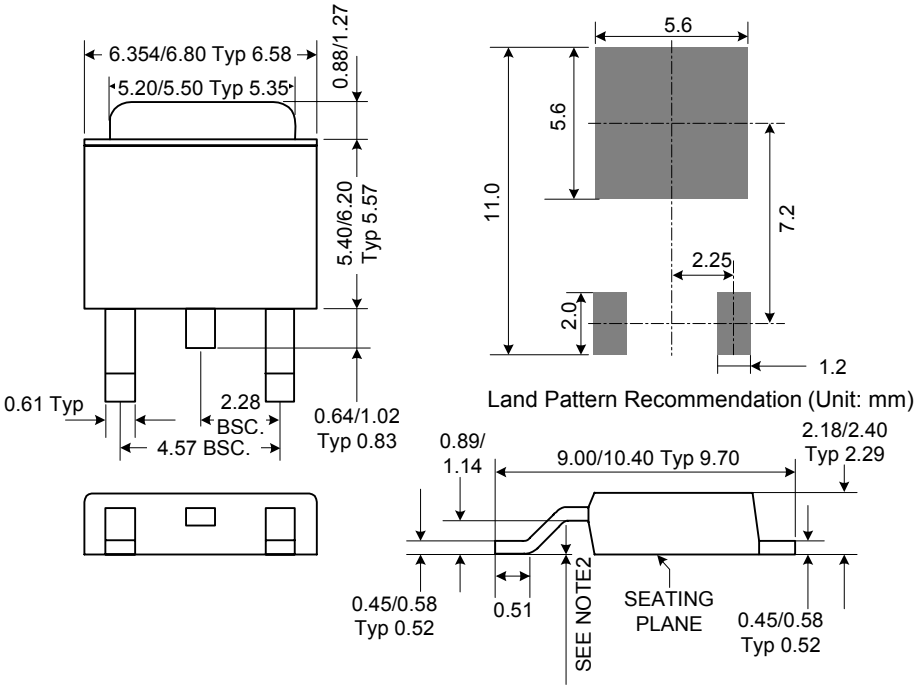

(2) SOT223-3L

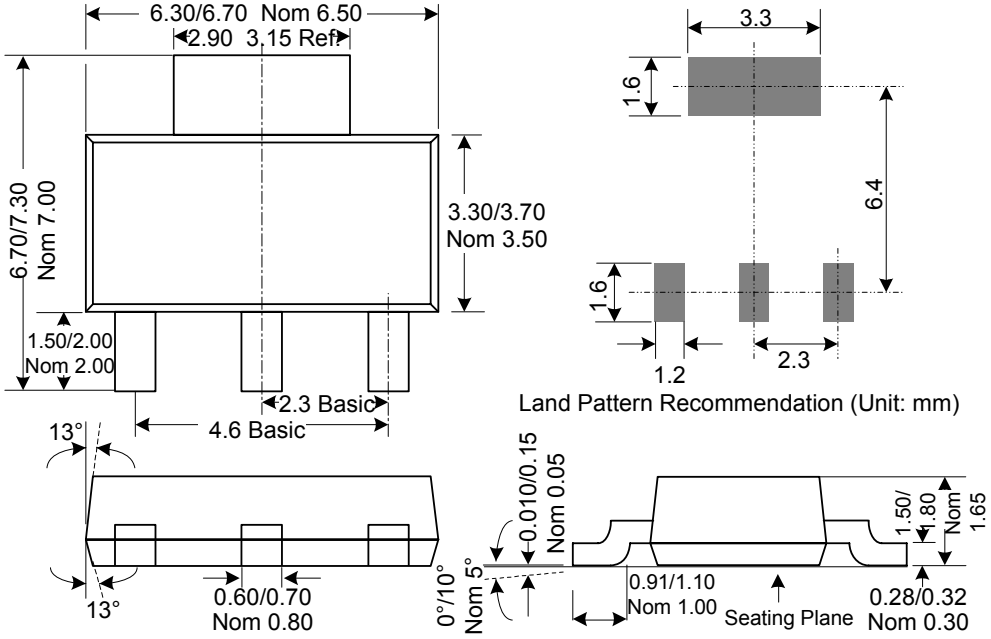

© Diodes Incorporated

IMPORTANT NOTICE

Diodes Incorporated and its subsidiaries reserve the right to make modifications, enhancements, improvements, corrections or other changes without further notice to any product herein. Diodes Incorporated does not assume any liability arising out of the application or use of any product described herein; neither does it convey any license under its patent rights, nor the rights of others. The user of products in such applications shall assume all risks of such use and will agree to hold Diodes Incorporated and all the companies whose products are represented on our website, harmless against all damages.

LIFE SUPPORT

Diodes Incorporated products are not authorized for use as critical components in life support devices or systems without the expressed written approval of the President of Diodes Incorporated.

© Diodes Incorporated