Single PWM Switching Controller

Features

- 2.3 to 5.5V Input Voltage Range
- Adjustable Frequency: Maximum 1MHZ
- Incorporates Soft-start Function
- Built-in Short-circuit Detection Circuit (SCP)
- Low Operating Current: Maximum to 1mA
- Low Shutdown Current: Maximum to 1mA
- Package: MSOP-8, TSSOP-8
- Under Voltage Lockout
- Lead Free Available (RoHS Compliant)

Applications

- LCD Display Power Source
- Camcorders VCRs, MP3 and Digital Still Camera
- Hand-held and Communication Instruments
- PDAs

General Description

The APW7078 is a single PWM, step-up DC-DC controller with low operating voltage application integrating soft-start and short circuit detection function. And the oscillator switching frequency on chip can be operated by terminating OSC pin to connect capacitor and resistor for adjustable operating frequency. Soft-start is adjusted with external capacitor, which sets the input current ramp. Besides, the external compensation FB pin will apply the flexibility in the dynamic loop status, which allow using small, low equivalent series resistance (ESR) ceramic output capacitors.

Pinouts

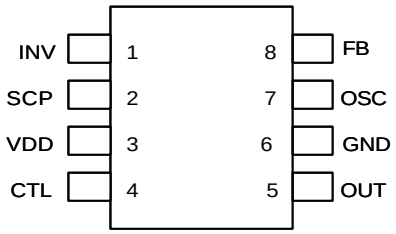

APW7078

Ordering and Marking Information

APW7078 □□-□□□ Lead Free Code Handling Code Temp. Range Package Code	Package Code X : MSOP - 8 O : TSSOP-8 Temp. Range I : -40 to 85 °C Handling Code TU : Tube TR : Tape & Reel Lead Free Code L : Lead Free Device Blank : Original Device
APW7078 X : APW7078 XXX XX	XXXXX - Date Code
APW7078 O : APW7078 XXXXX	XXXXX - Date Code

Notes: ANPEC lead-free products contain molding compounds/die attach materials and 100% matte in plate termination finish; which are fully compliant with RoHS and compatible with both SnPb and lead-free soldiering operations. ANPEC lead-free products meet or exceed the lead-free requirements of IPC/JEDEC J STD-020C for MSL classification at lead-free peak reflow temperature.

ANPEC reserves the right to make changes to improve reliability or manufacturability without notice, and advise customers to obtain the latest version of relevant information to verify before placing orders.

Block Diagram

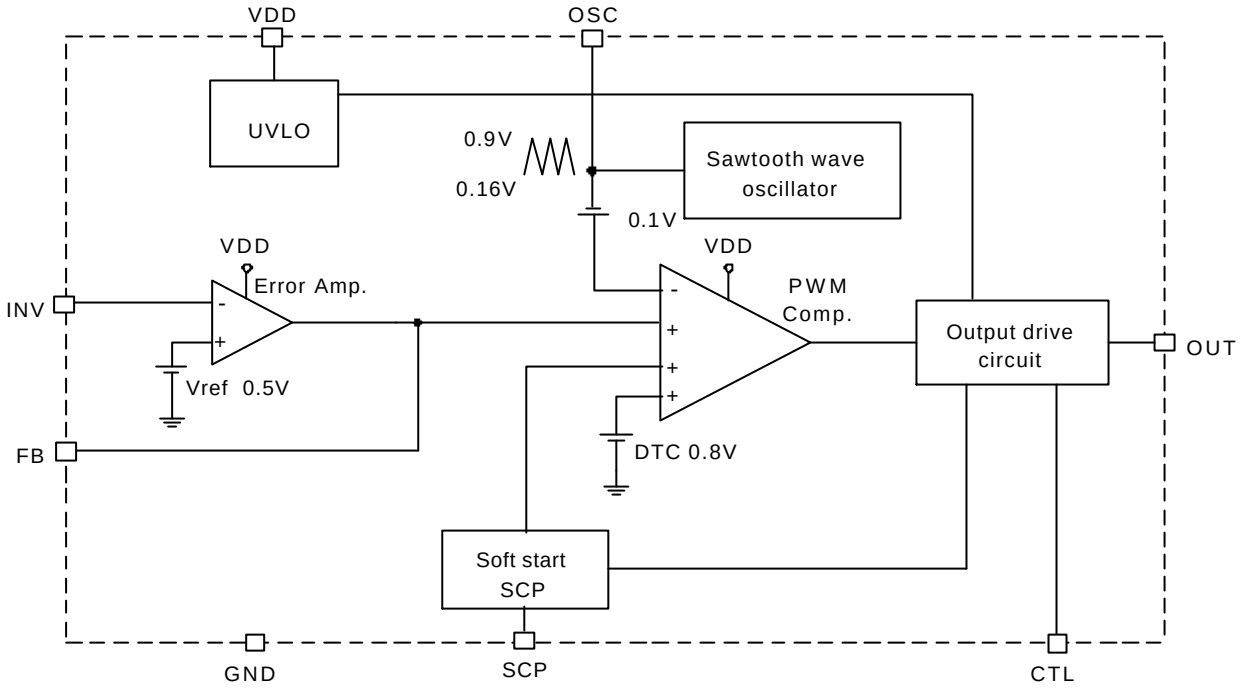

Absolute Maximum Ratings

Symbol	Parameter	Value	Unit
V_{DD}	Supply Voltage	-0.3 to 7	V
V_{IO}	Input / Output Pins	-0.3 to 7	V
T_A	Operating Ambient Temperature Range	-40 to 85	°C
T_J	Junction Temperature Range	-40 to 150	°C
T_{STG}	Storage Temperature Range	-65 to +150	°C
T_S	Soldering Temperature	300, 10 seconds	°C

Recommended Operating Condition

Symbol	Parameter	Value			Unit
		Min.	Typ.	Max.	
V_{DD}	Supply Voltage	2.3	-	5.5	V
V_{INV}	Error Amplifier Invert Input Voltage	-0.2	-	1	V
V_{CTL}	Control Pin Input Voltage	-0.2	-	V_{DD}	V
C_{SCP}	SCP Pin Capacitor	-	0.1	-	µF
R_T	Timing Resistance	1.0	3.3	10	KΩ
C_T	Timing Capacitor	100	-	270	pF
F_{SW}	Oscillator Frequency	200	600	1000	KHz

Copyright © ANPEC Electronics Corp.

Electrical Characteristics (T_A = 25°C, V_{DD} = 3.3V, unless otherwise specified)

Symbol	Parameter	Test Conditions	APW7078			Unit
			Min	Typ	Max	
Entire Device						
V_{DD}	Supply Voltage		2.3		5.5	V
I_{DD}	Supply Current	V_{DD}=2.3V to 5.5V		0.7	1	mA
I_{SD}	Shutdown Current	CTL pin open or VDD		0.1	1	μA
Dmax	Maximum Duty Cycle	Rt=3.3K, Ct=270pF	80	85	92	%
Under Voltage Lockout Protection						
V_{TH}	V_{DD} Startup Threshold Voltage	-	1.9	2.0	2.1	V
V_R	Hysteresis voltage		-	1.8	1.9	V
Soft-Start						
Vss	Voltage at Soft-Start completion	-	0.7	0.8	0.9	V
Ics	Soft-Start Charge Current	Vscp=0V	-0.7	-1.0	-1.5	μA
Short Circuit Protection(SCP)						
Vscp	Threshold Voltage		0.7	0.8	0.9	V
Iscp	Charge Current	Vscp=0V	-0.7	-1.0	-1.5	μA
Sawtooth waveform oscillator(OSC)						
Fosc	Oscillator Frequency	Rt=3.3KΩ, Ct=270pF	500	600	700	KHz
Fdv	Frequency Stability for Voltage	V_{DD}=2.3V to 5.5V	-	2	5	%
Fdt	Frequency Stability for Temperature	Ta=-40°C to 85°C	-	5	-	%
Error Amplifier						
Vref	Reference Voltage	VFB=INV	0.49	0.5	0.51	V
Vref/dV	Vref stability	V_{DD}=2.3V to 5.5V		5	20	mV
Vref/dT	Vref variation with Temperature	Ta=-40°C to 85°C		1		%
gm	Transconductance		1000	1300	1600	μA/V
I_B	Input Bias Current	INV=0V			1	μA
V_{OH}	Output Voltage Range	-	1.6	1.8		V
V_{OL}		-			0.01	V
	Output Source Current	INV=0V,FB=0.5V	-150	-180	-210	μA
	Output Sink Current	INV=1V,FB=0.5V	140	170	200	μA

Copyright © ANPEC Electronics Corp.

Electrical Characteristics (Cont.)

(T_A = 25°C, V_{DD} = 3.3V, unless otherwise specified)

Symbol	Parameter	Test Conditions	APW7078			Unit
			Min	Typ	Max	
PWM Controller Driver						
I_{SOURCE}	Output Source Current	Duty<5%, OUT=0V	-150	-200		mA
I_{SINK}	Output Sink Current	Duty>5%, OUT=5V	150	200		mA
Control Block						
V_{IL}	Control Voltage	Active mode			$0.2V_{DD}$	
V_{IH}		Switch-off mode	$0.8V_{DD}$			

Function Pin Description

Pin No.	Symbol	I/O	Description
1	INV	I	Internal 0.5V reference voltage. Use a resistor divider to set the output voltage.
2	SCP	-	Soft-start and short-circuit detection, connects a capacitor from the pin to ground.
3	VDD	-	Power supply input pin for IC voltage.
4	CTL	I	Output control pin. Low = operating mode; High = shutdown mode.
5	OUT	O	External MOSFET driving pin.
6	GND	-	Ground pins of the IC.
7	OSC	-	Setting capacitor and resister to provide oscillation switching frequency adjustment.
8	FB	O	Error amplifier output pin. Setting circuit for IC compensation.

Application Schematic

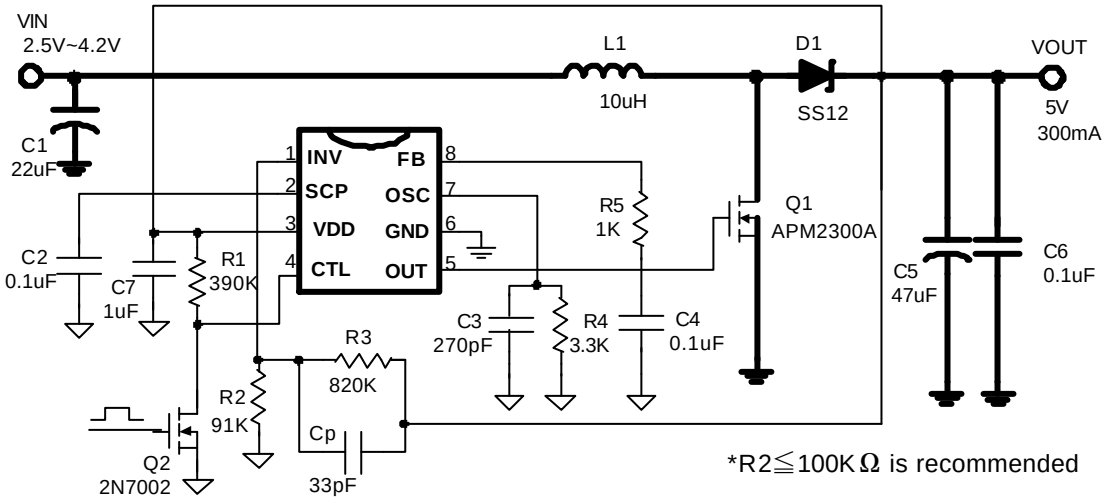

Fig1: APW7078 Step-up Application for Adjust Voltage

Application Schematic

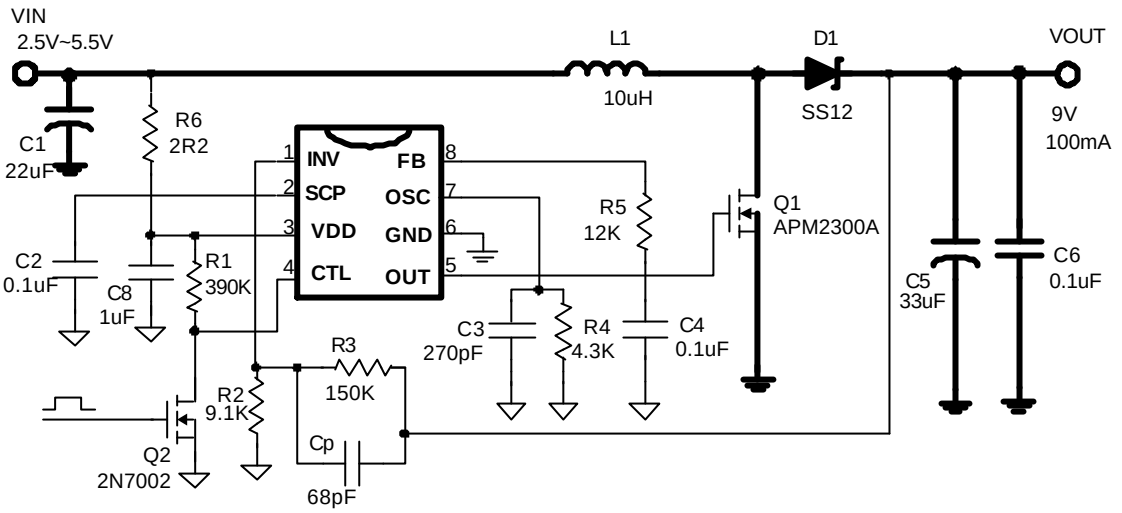

Fig2: APW7078 Step-up Application for Adjust Voltage

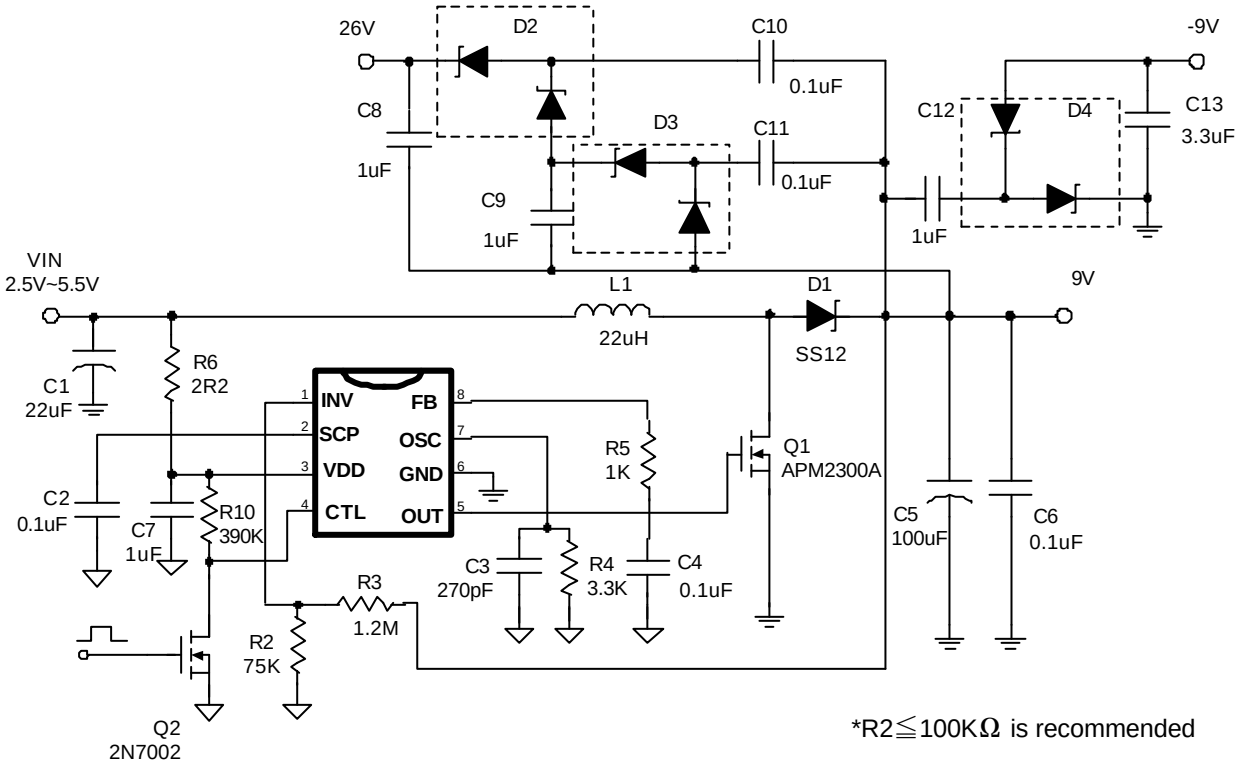

Fig3. APW7078 Multiple-output for TFT LCD Panel Power

Timing Diagram

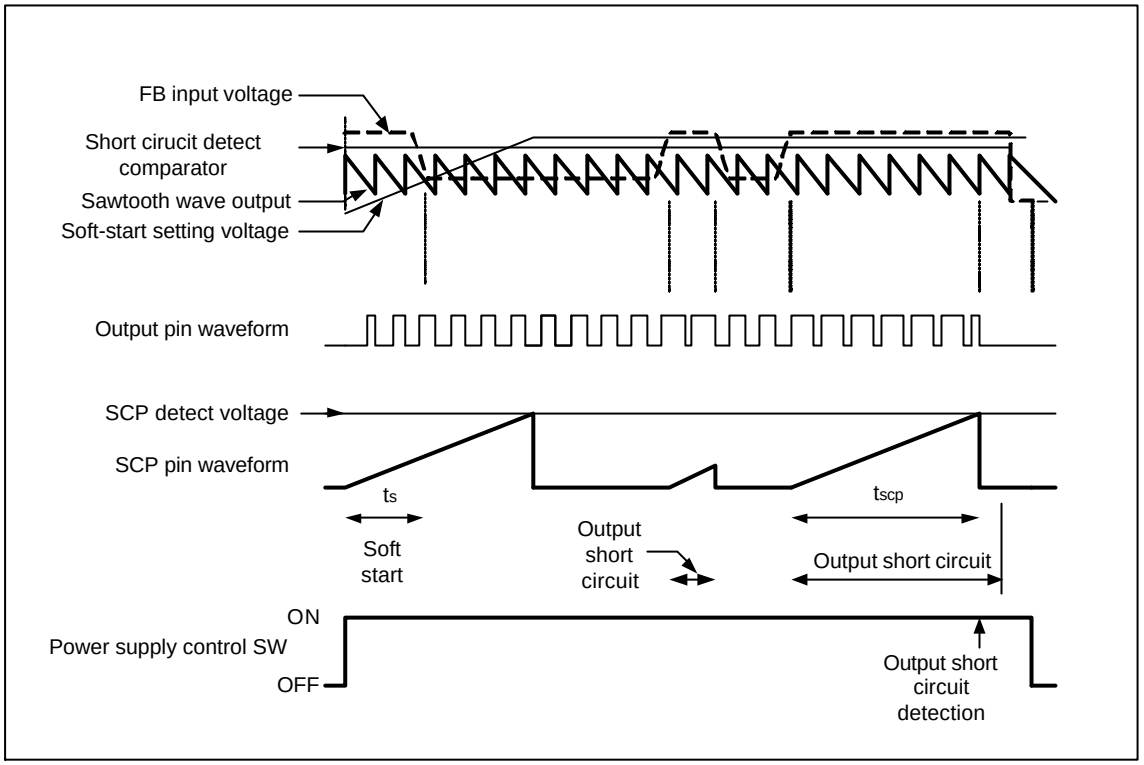

Typical Characteristics (T_A = 25°C, V_{DD} = 3.3V, unless otherwise specified)

Supply Current vs. Supply Voltage

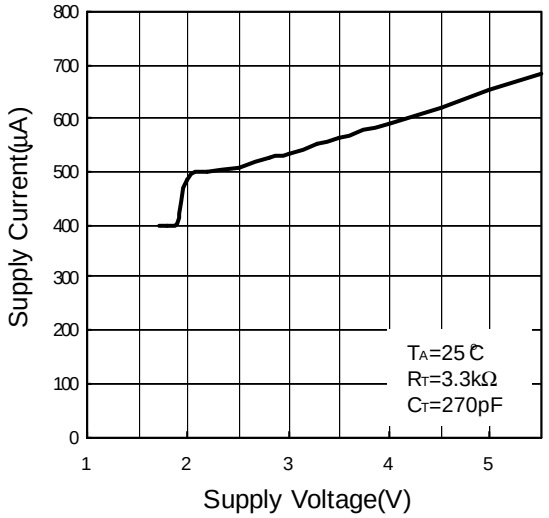

SHDN and Release

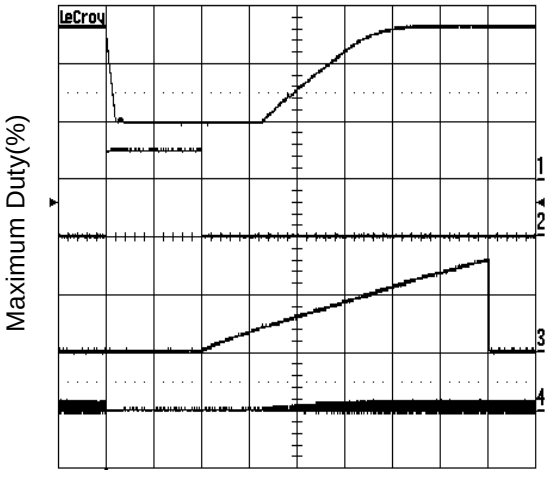

CH1=VOUT 2V/DIV TIME=20ms/DIV
CH2=VCTL 2V/DIV
CH3=Vss 0.5V/DIV
CH4=IL 1A/DIV

Typical Characteristics (Cont.)

(T_A = 25°C, V_{DD} = 3.3V, unless otherwise specified)

Reference Voltage vs. Supply Voltage

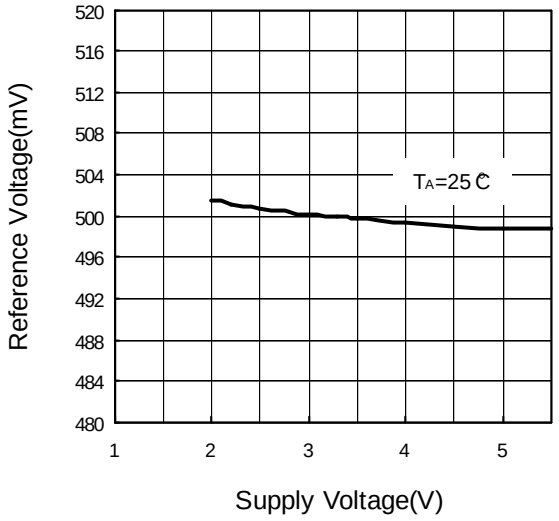

Reference Voltage vs. Temperature

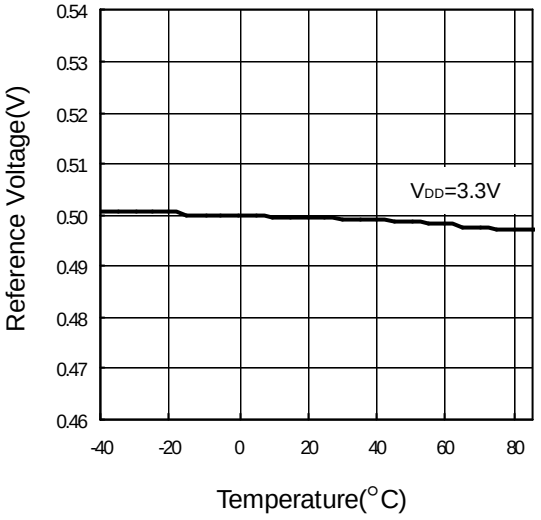

Oscillator Frequency vs. Timing Resistor

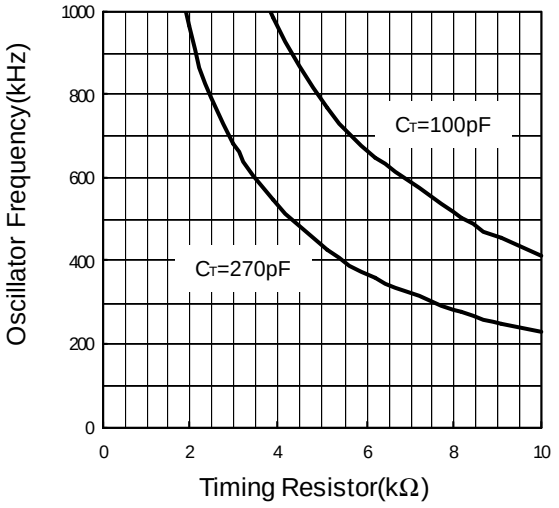

Maximum Duty vs. Oscillator Frequency

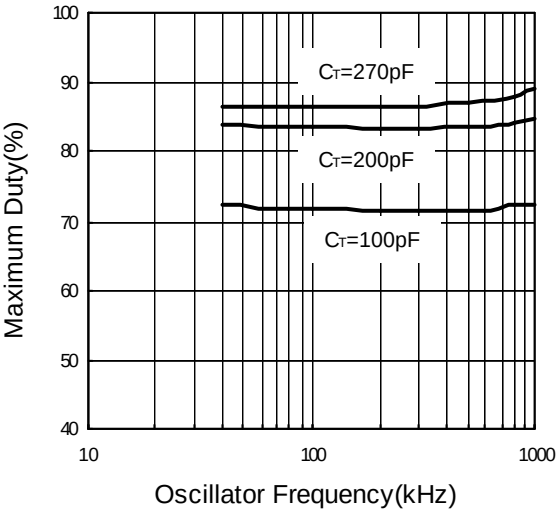

Copyright © ANPEC Electronics Corp.

Typical Characteristics (Cont.)

(T_A = 25°C, V_{DD} = 3.3V, unless otherwise specified)

Power on and off under light load

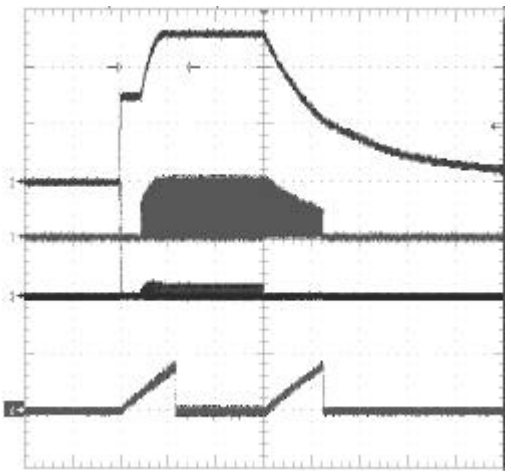

IOUT= 5mA, TIME=40ms/DIV
CH1=OUT 5V DIV
CH2=VOUT=VDD 2V/DIV
CH3=IL 0.5A/DIV
CH4=Vss 1V/DIV

Power on and off under heavy load

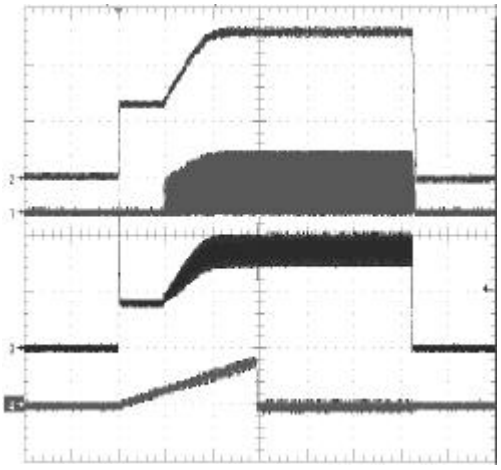

IIOUT= 400mA, TIME=40ms/DIV
CH1=OUT 5V DIV
CH2=VOUT=VDD 2V/DIV
CH3=IL 0.5A/DIV
CH4=Vss 1V/DIV

Efficiency

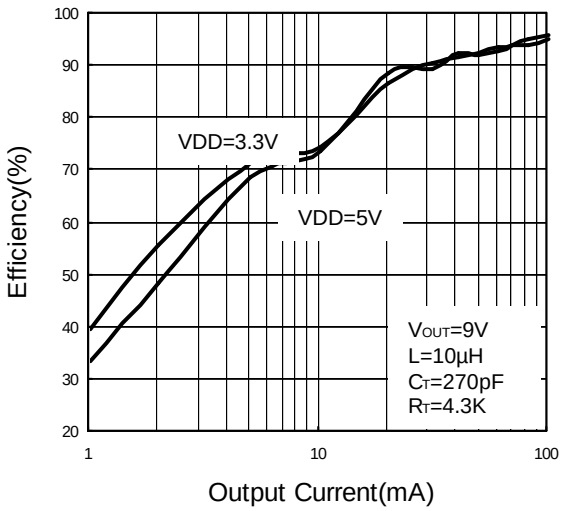

Efficiency

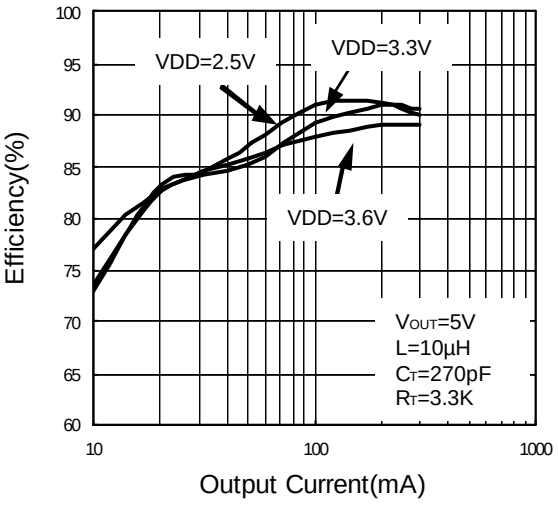

Copyright © ANPEC Electronics Corp.

Typical Characteristics

(T_A = 25°C, V_{DD} = 3.3V, unless otherwise specified)

Frequency Variation Ratio vs. Supply Voltage

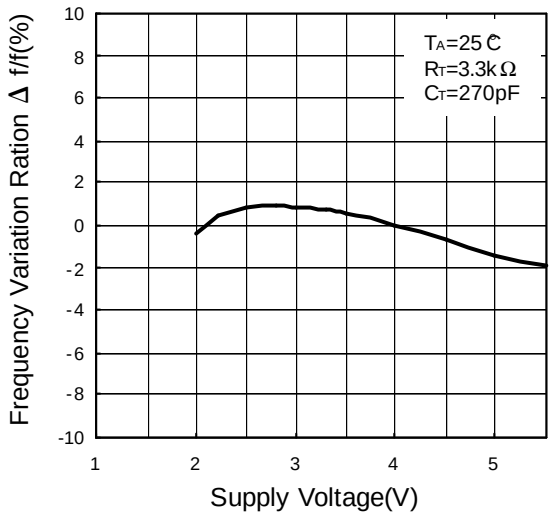

Frequency Variation Ratio vs. Temperature

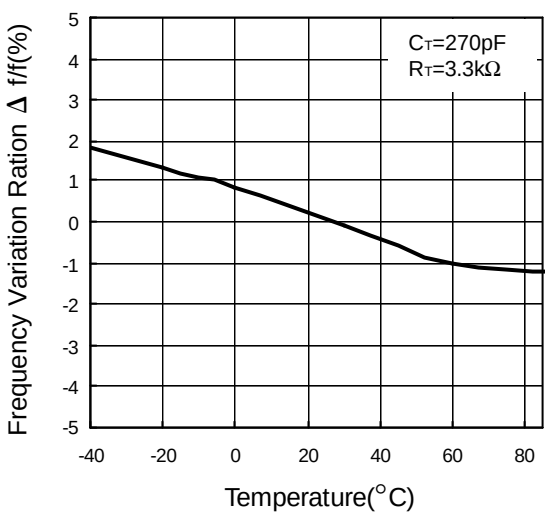

Function Description

Setting Oscillating Frequency

The oscillator circuit generate a triangular sawtooth wave with a peak of 0.9V and through of 0.16V using the timing capacitor(Ct) and the timing resistor(Rt) that are connected to OSC pin. This oscillator can provide oscillating frequency up to 1MHz.

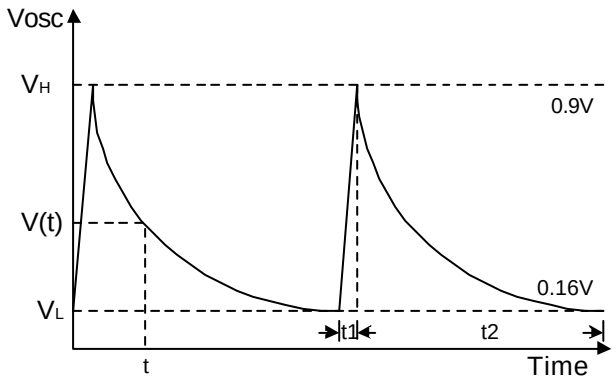

$$i = c\frac{\Delta V}{\Delta t}$$

$$t_1 = C_t \cdot \frac{0.9V - 0.16V}{2mA} = 370 \cdot C_t$$

$$V(t) = V_H \cdot e^{-\frac{t}{R_t C_t}}$$

$$t_2 = R_t C_t \ln(V_H / V_L) = 1.72 \cdot R_t C_t$$

$$T = t_1 + t_2 = C_t(370 + 1.72R_t)$$

Setting Output Voltage

The output voltage is set using the INV pin and a resistor divider connected to the output as shown in the typical operating circuit. The internal reference voltage is 0.5V with 2% variation, so the ratio of the feedback resistors sets the output voltage according to the following equation:

Function Description (Cont.)

Setting Output Voltage (Cont.)

$$V_{OUT} = \left(1 + \frac{R3}{R2}\right) \times 0.5V$$

To avoid the thermal noise from feedback resistor, Resistance R2 smaller than 100kΩ and 1% variation is recommended.

Error amplifier

The error amplifier detects the output voltage of the switching regulator and outputs the PWM control signal. The voltage gain is fixed, and connecting a phase compensation resistor and capacitor to the FB pin (pin 8) provides stable phase compensation for the system.

PWM comparator

The voltage comparator has one inverting and three non-inverting inputs. The comparator is a voltage/pulse width converter that controls the ON time of the output pulse depending on the input voltage. The output level is high (H) when the sawtooth wave is lower than the error amplifier output voltage, soft start setting voltage, and idle period setting voltage.

Output circuit

The output circuit is a typical push-pull configuration to drive an external NMOS transistor directly. It can provide a 200mA source/sink to/from OUT(pin 6).

Soft start and short circuit detection

Soft start operation is set by connecting capacitor Cscp to the SCP pin (pin 2). Soft start prevents a current spike on start-up.On completion of soft start operation, the SCP pin (pin 2) stays low and enters the short circuit detection wait state.When an output short circuit occurs, the error amplifier output is fixed at 1.8V and capacitor Cscp starts charging.

After charging to approximately 0.8 V, the output pin (pin 5) is set low and the SCP pin stays low. Once the protection circuit operates, the circuit can be restored by resetting the power supply. Short circuit detection time can be calculate as follow:

$$t_{SCP} = 0.8 \times Cscp(\mu F)$$

Under Voltage Lock Out(UVLO)

Transients during powering on or instantaneous glitches in the supply voltage can cause system damage or failure. The circuit to prevent malfunction at low input voltage detects a low input voltage by comparing the supply voltage to the internal reference voltage. On detection, the circuit fixes the output pin to low. The system recovers when the supply voltage rises back above the threshold voltage of the malfunction prevention circuit.

Layout Considerations

Switching Noise Decoupling Capacitor

A 0.1μF ceramic capacitor should be placed close to the VOUT pin and GND pin of the chip to filter the switching spikes in the output voltage monitored by the VOUT pin.

Feedback Network

On APW7078 application, the feedback networks should be connected directly to a dedicated analog ground plane and this ground plane must connect to the GND pin. If no analog ground plane is available then this ground must tie directly to the GND pin. The feedback network, resistors R2 and R3, should be kept close to the FB pin, and away from the inductor, to minimize copper trace connections that can inject noise into the system.

Input Capacitor

The input capacitor C_{IN} in V_{IN} must be placed close to the IC. This will reduce copper trace resistance which

Copyright © ANPEC Electronics Corp.

Function Description(Cont.)

Input Capacitor (Cont.)

effects input voltage ripple of the IC. For additional input voltage filtering, a 1µF capacitor can be placed in parallel with C_{IN}, close to the VDD pin, to shunt any high frequency noise to ground.

Demo Board Circuit Layout

Top Layer

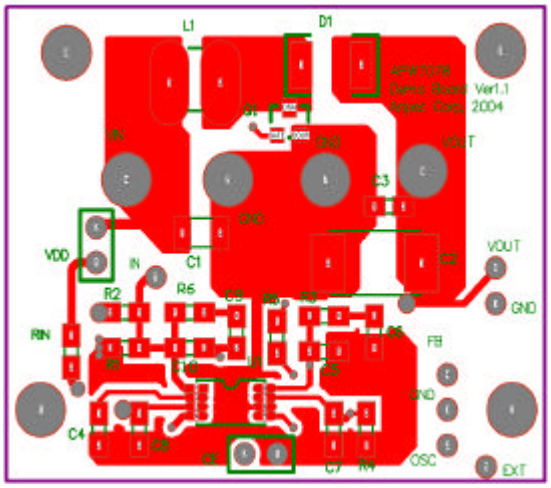

Bottom Layer

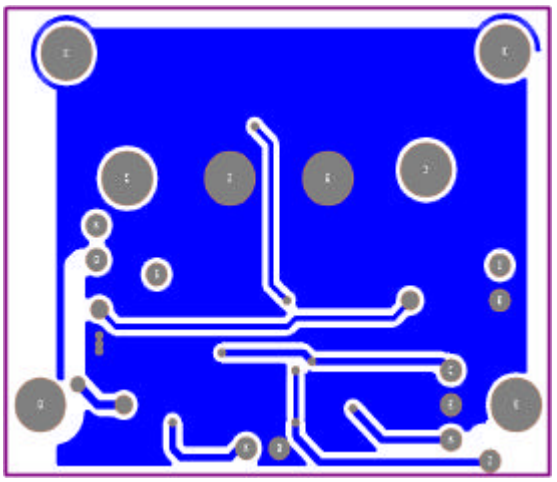

Packaging Information

MSOP-8

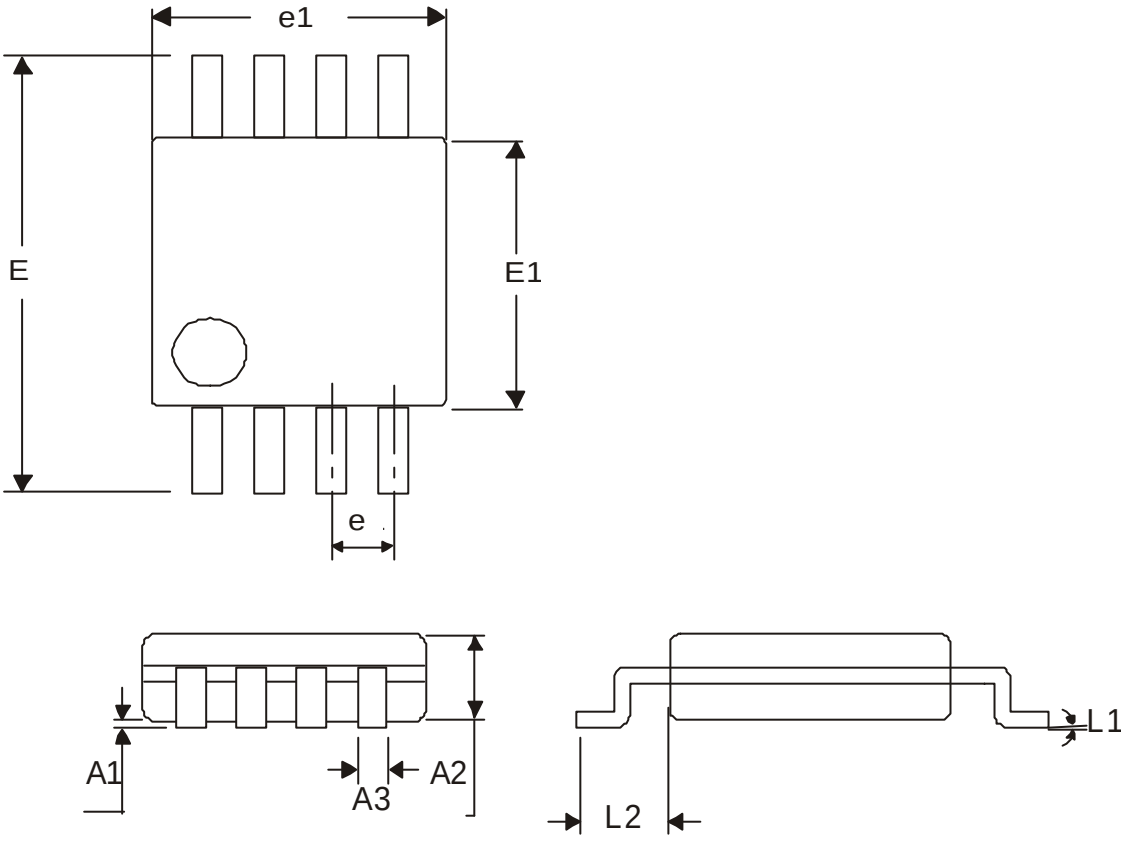

Dim	Millimeters		Inches	
	Min.	Max.	Min.	Max.
A1	0.06	0.15	0.002	0.006
A2	0.86 TYP		0.34 TYP	
A3	0.25	0.4	0.01	0.0126
e	0.65 TYP		0.0256TYP	
e1	2.90	3.1	0.114	0.124
E	4.8	5.0	0.189	0.197
E1	2.90	3.1	0.169	0.177
L1	0.25 REF		0.039REF	
L2	0.0375 REF		0.953 REF	

Copyright © ANPEC Electronics Corp.

Packaging Information

TSSOP-8

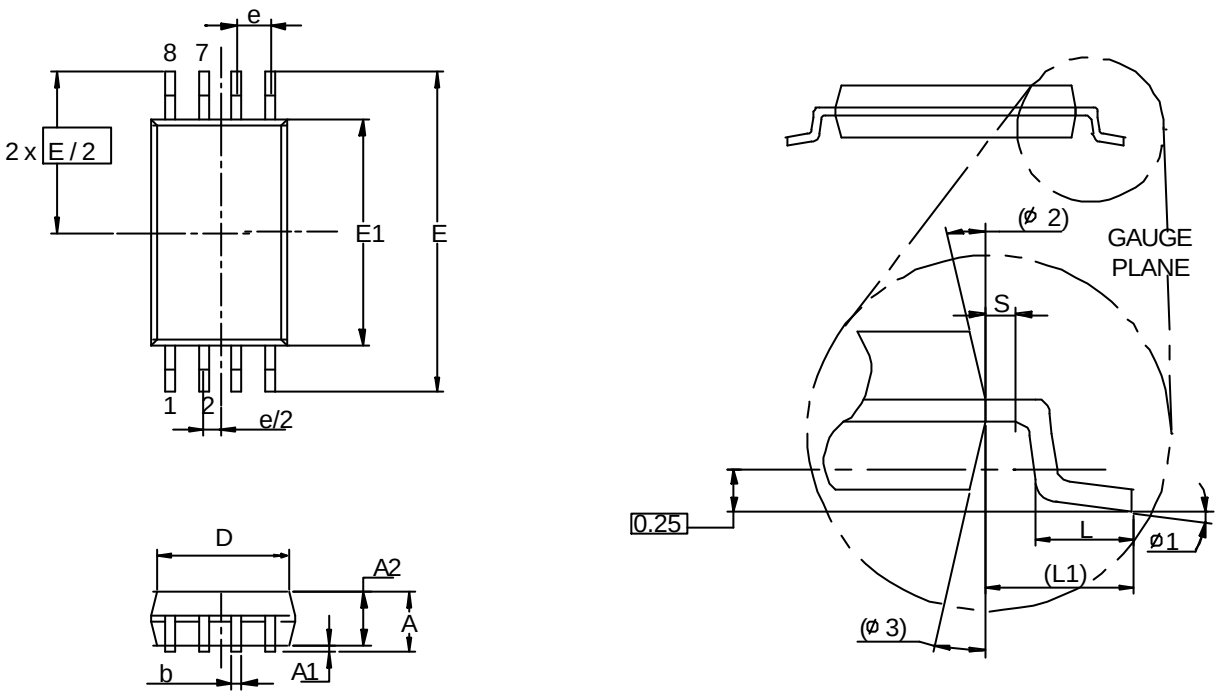

Dim	Millimeters		Inches	
	Min.	Max.	Min.	Max.
A		1.2		0.047
A1	0.00	0.15	0.000	0.006
A2	0.80	1.05	0.031	0.041
b	0.19	0.30	0.007	0.012
D	2.9	3.1	0.114	0.122
e	0.65 BSC		0.026 BSC	
E	6.40 BSC		0.252 BSC	
E1	4.30	4.50	0.169	0.177
L	0.45	0.75	0.018	0.030
L1	1.0 REF		0.039REF	
R	0.09		0.004	
R1	0.09		0.004	
S	0.2		0.008	
ϕ1	0°	8°	0°	8°
ϕ2	12° REF		12° REF	
ϕ3	12° REF		12° REF	

Copyright © ANPEC Electronics Corp.

Physical Specifications

Terminal Material	Solder-Plated Copper (Solder Material : 90/10 or 63/37 SnPb)
Lead Solderability	Meets EIA Specification RSI86-91, ANSI/J-STD-002 Category 3.

Reflow Condition (IR/Convection or VPR Reflow)

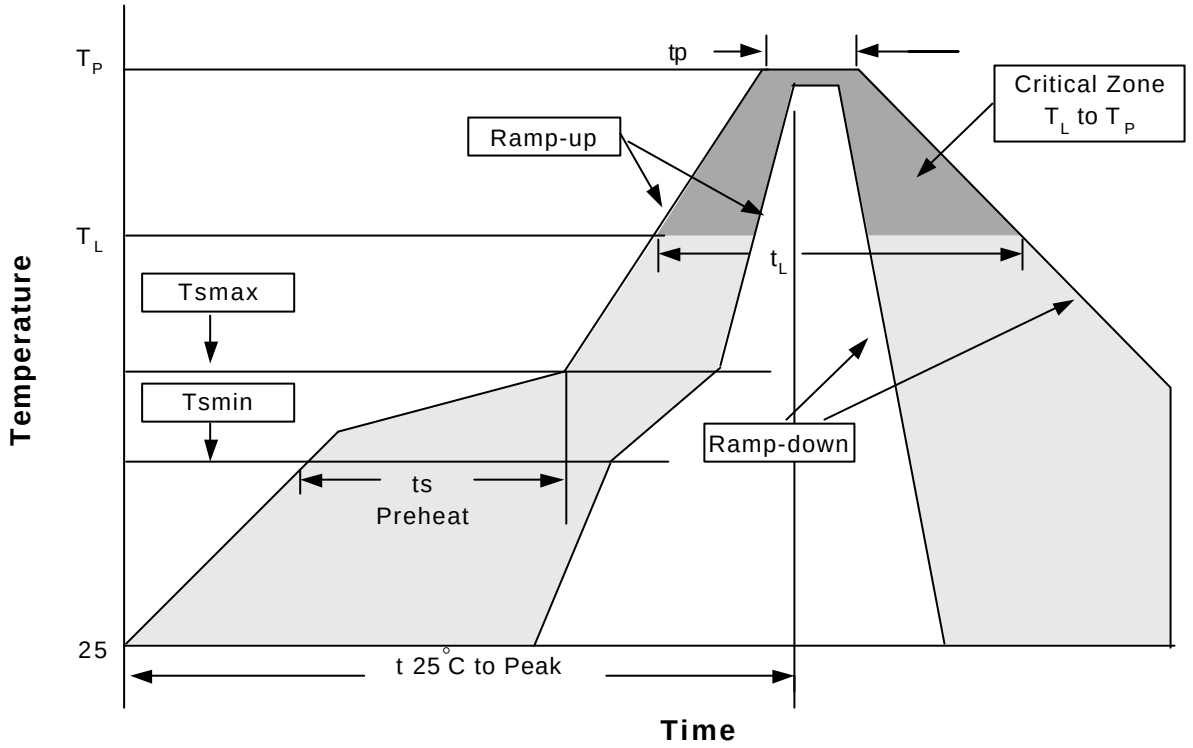

Classification Reflow Profiles

Profile Feature	Sn-Pb Eutectic Assembly	Pb-Free Assembly
Average ramp-up rate (T_L to T_P)	3°C/second max.	3°C/second max.
Preheat - Temperature Min (Tsmin) - Temperature Max (Tsmax) - Time (min to max) (ts)	100°C 150°C 60-120 seconds	150°C 200°C 60-180 seconds
Time maintained above: - Temperature (T_L) - Time (t_L)	183°C 60-150 seconds	217°C 60-150 seconds
Peak/Classificatioon Temperature (Tp)	See table 1	See table 2
Time within 5°C of actual Peak Temperature (tp)	10-30 seconds	20-40 seconds
Ramp-down Rate	6°C/second max.	6°C/second max.
Time 25°C to Peak Temperature	6 minutes max.	8 minutes max.

Notes: All temperatures refer to topside of the package .Measured on the body surface.

Copyright © ANPEC Electronics Corp.

Classification Reflow Profiles(Cont.)

Table 1. SnPb Entectic Process – Package Peak Reflow Temperatures

Package Thickness	Volume mm^3 <350	Volume mm^3 ³350
<2.5 mm	240 +0/-5°C	225 +0/-5°C
≥2.5 mm	225 +0/-5°C	225 +0/-5°C

Table 2. Pb-free Process – Package Classification Reflow Temperatures

Package Thickness	Volume mm^3 <350	Volume mm^3 350-2000	Volume mm^3 >2000
<1.6 mm	260 +0°C*	260 +0°C*	260 +0°C*
1.6 mm – 2.5 mm	260 +0°C*	250 +0°C*	245 +0°C*
≥2.5 mm	250 +0°C*	245 +0°C*	245 +0°C*
*Tolerance: The device manufacturer/supplier **shall** assure process compatibility up to and including the stated classification temperature (this means Peak reflow temperature +0°C. For example 260°C+0°C) at the rated MSL level.			

Reliability Test Program

Test item	Method	Description
SOLDERABILITY	MIL-STD-883D-2003	245°C,5 SEC
HOLT	MIL-STD 883D-1005.7	1000 Hrs Bias @ 125°C
PCT	JESD-22-B, A102	168 Hrs, 100% RH, 121°C
TST	MIL-STD 883D-1011.9	-65°C ~ 150°C, 200 Cycles

Carrier Tape & Reel Dimensions

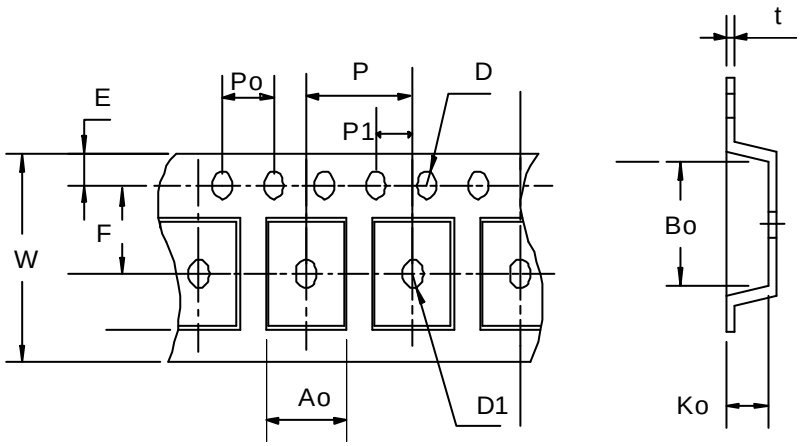

Carrier Tape & Reel Dimensions(Cont.)

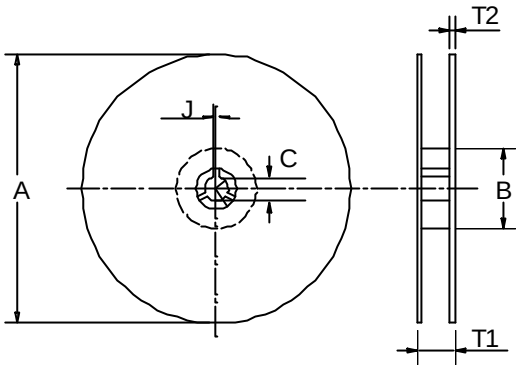

Application	A	B	C	J	T1	T2	W	P	E
MSOP- 8	330 ± 1	62 +1.5	12.75+ 0.15	2 ± 0.5	12.4 ± 0.2	2 ± 0.2	12± 0. 3	8± 0.1	1.75±0.1
	F	D	D1	Po	P1	Ao	Bo	Ko	t
	5.5± 1	1.55 +0.1	1.55+ 0.25	4.0 ± 0.1	2.0 ± 0.1	6.4 ± 0.1	5.2± 0. 1	2.1± 0.1	0.3±0.013
Application	A	B	C	J	T1	T2	W	P	E
TSSOP-8	330 ± 1	62 +1.5	12.75+ 0.15	2 + 0.5	12.4 ± 0.2	2 ± 0.2	12± 0. 3	8± 0.1	1.75±0.1
	F	D	D1	Po	P1	Ao	Bo	Ko	t
	5.5 ± 0. 1	1.5 + 0.1	1.5 + 0.1	4.0 ± 0.1	2.0 ± 0.1	7.0 ± 0.1	3.6 ± 0.3	1.6 ± 0.1	0.3±0.013

(mm)

Cover Tape Dimensions

Application	Carrier Width	Cover Tape Width	Devices Per Reel
MSOP- 8	12	9.3	2500
TSSOP- 8	12	9.3	2500

Customer Service

Anpec Electronics Corp.
Head Office :
No.6, Dusing 1st Road, SBIP,
Hsin-Chu, Taiwan, R.O.C.
Tel : 886-3-5642000
Fax : 886-3-5642050

Taipei Branch :
7F, No. 137, Lane 235, Pac Chiao Rd.,
Hsin Tien City, Taipei Hsien, Taiwan, R. O. C.
Tel : 886-2-89191368
Fax : 886-2-89191369