APTGT600DU60

Dual common source Trench + Field Stop IGBT® Power Module

V_{CES} = 600V
I_C = 600A* @ Tc = 80°C

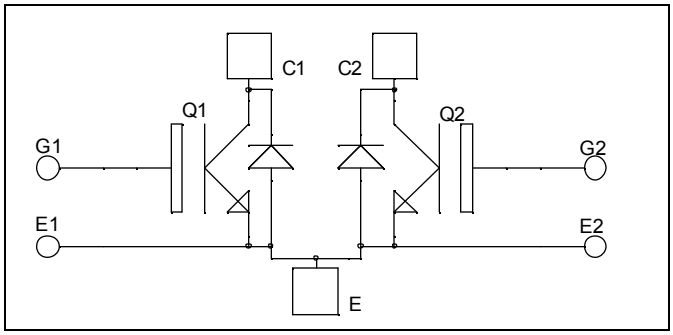

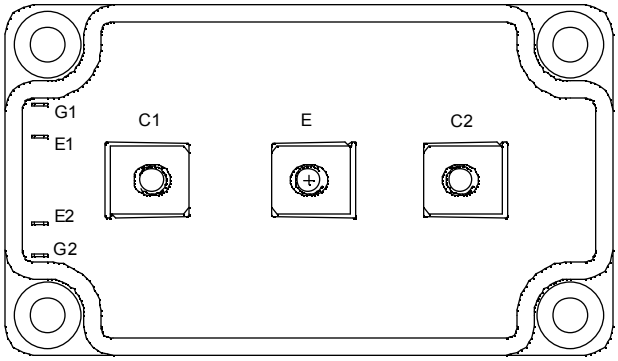

Application

- AC Switches
- Switched Mode Power Supplies
- Uninterruptible Power Supplies

Features

- Trench + Field Stop IGBT® Technology
  - Low voltage drop
  - Low tail current
  - Switching frequency up to 20 kHz
  - Soft recovery parallel diodes
  - Low diode VF
  - Low leakage current
  - Avalanche energy rated
  - RBSOA and SCSOA rated
- Kelvin emitter for easy drive
- Very low stray inductance
  - Symmetrical design
  - M5 power connectors
- High level of integration

Benefits

- Stable temperature behavior
- Very rugged
- Direct mounting to heatsink (isolated package)
- Low junction to case thermal resistance
- Easy paralleling due to positive TC of VCEsat
- Low profile

Absolute maximum ratings

Symbol	*Parameter*		*Max ratings*	*Unit*
V_{CES}	Collector - Emitter Breakdown Voltage		600	V
I_C	Continuous Collector Current	T_C = 25°C	700 *	A
		T_C = 80°C	600 *	
I_{CM}	Pulsed Collector Current	T_C = 25°C	800	
V_{GE}	Gate – Emitter Voltage		±20	V
P_D	Maximum Power Dissipation	T_C = 25°C	2300	W
RBSOA	Reverse Bias Safe Operating Area	T_j = 150°C	1200A @ 550V	

* Specification of IGBT device but output current must be limited to 500A to not exceed a delta of temperature greater than 100°C for the connectors.

CAUTION: These Devices are sensitive to Electrostatic Discharge. Proper Handing Procedures Should Be Followed.

All ratings @ T_j = 25°C unless otherwise specified

Electrical Characteristics

Symbol	*Characteristic*	*Test Conditions*		*Min*	*Typ*	*Max*	*Unit*
I_{CES}	Zero Gate Voltage Collector Current	V_{GE} = 0V, V_{CE} = 600V				750	µA
$V_{CE(sat)}$	Collector Emitter Saturation Voltage	V_{GE} =15V I_C = 600A	T_j = 25°C		1.4	1.8	V
			T_j = 150°C		1.5		
$V_{GE(th)}$	Gate Threshold Voltage	V_{GE} = V_{CE}, I_C = 2mA		5.0	5.8	6.5	V
I_{GES}	Gate – Emitter Leakage Current	V_{GE} = 20V, V_{CE} = 0V				800	nA

Dynamic Characteristics

Symbol	*Characteristic*	*Test Conditions*	*Min*	*Typ*	*Max*	*Unit*
C_{ies}	Input Capacitance	V_{GE} = 0V V_{CE} = 25V f = 1MHz		49		nF
C_{oes}	Output Capacitance			3.1		
C_{res}	Reverse Transfer Capacitance			1.5		
$T_{d(on)}$	Turn-on Delay Time	Inductive Switching (25°C) V_{GE} = ±15V V_{Bus} = 300V I_C = 600A R_G = 2Ω		130		ns
T_r	Rise Time			55		
$T_{d(off)}$	Turn-off Delay Time			250		
T_f	Fall Time			60		
$T_{d(on)}$	Turn-on Delay Time	Inductive Switching (150°C) V_{GE} = ±15V V_{Bus} = 300V I_C = 600A R_G = 2Ω		145		ns
T_r	Rise Time			60		
$T_{d(off)}$	Turn-off Delay Time			320		
T_f	Fall Time			80		
E_{on}	Turn on Energy			10.5		mJ
E_{off}	Turn off Energy			21		

Reverse diode ratings and characteristics

Symbol	*Characteristic*	*Test Conditions*		*Min*	*Typ*	*Max*	*Unit*
V_{RRM}	Maximum Peak Repetitive Reverse Voltage			600			V
I_{RM}	Maximum Reverse Leakage Current	V_R=600V	T_j = 25°C			750	µA
			T_j = 150°C			1000	
$I_{F(AV)}$	Maximum Average Forward Current	50% duty cycle	Tc = 80°C		600		A
V_F	Diode Forward Voltage	I_F = 600A V_{GE} = 0V	T_j = 25°C		1.5	1.9	V
			T_j = 150°C		1.4		
t_{rr}	Reverse Recovery Time	I_F = 600A V_R = 300V di/dt =5000A/µs	T_j = 25°C		125		ns
			T_j = 150°C		220		
Q_{rr}	Reverse Recovery Charge		T_j = 25°C		27		µC
			T_j = 150°C		57		

Thermal and package characteristics

Symbol	*Characteristic*			*Min*	*Typ*	*Max*	*Unit*
R_{thJC}	Junction to Case		IGBT			0.065	°C/W
			Diode			0.11	
V_{ISOL}	RMS Isolation Voltage, any terminal to case t =1 min, I isol<1mA, 50/60Hz			2500			V
T_J	Operating junction temperature range			-40		175	°C
T_{STG}	Storage Temperature Range			-40		125	
T_C	Operating Case Temperature			-40		100	
Torque	Mounting torque	To heatsink	M6	3		5	N.m
		For terminals	M5	2		3.5	
Wt	Package Weight					280	g

Package outline (dimensions in mm)

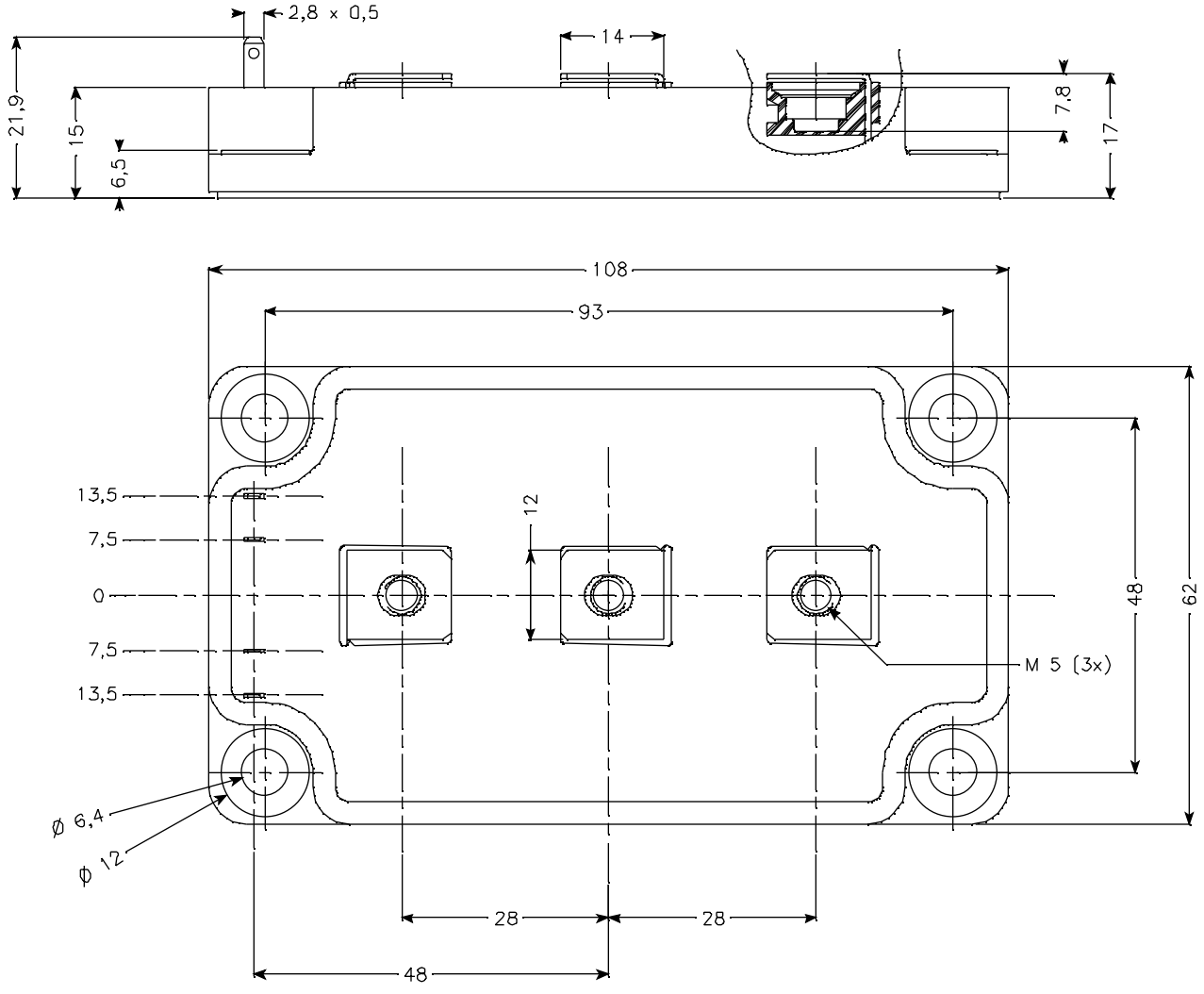

Typical Performance Curve

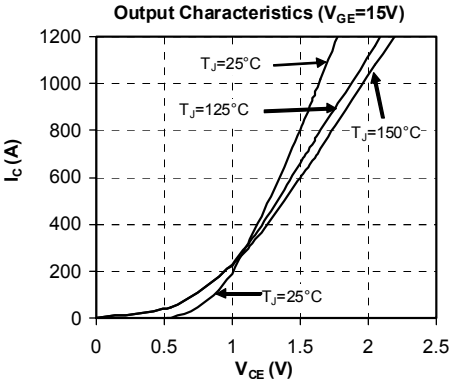

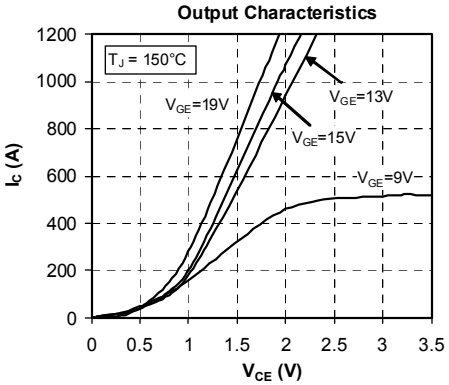

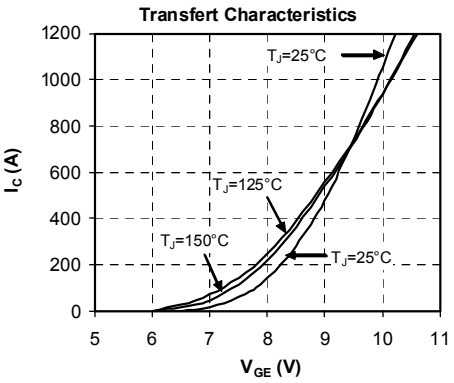

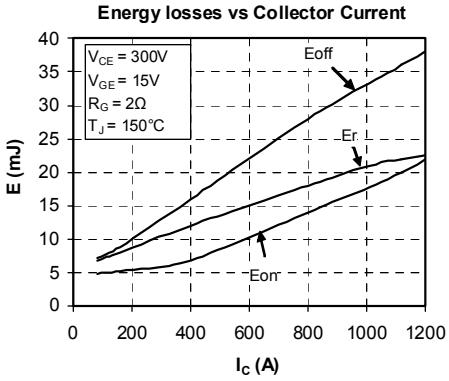

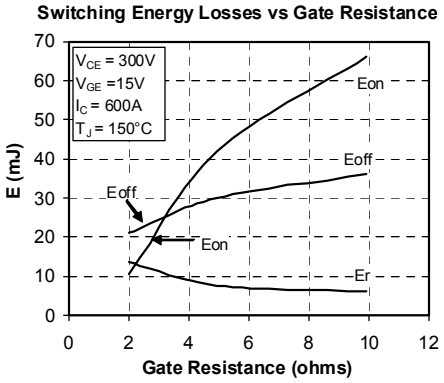

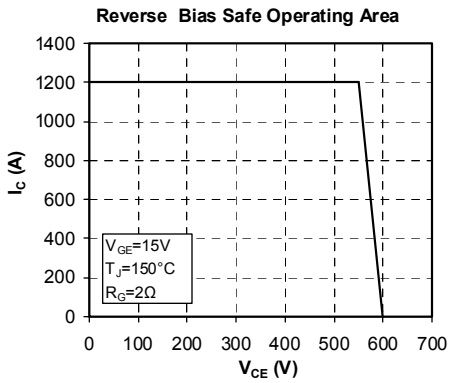

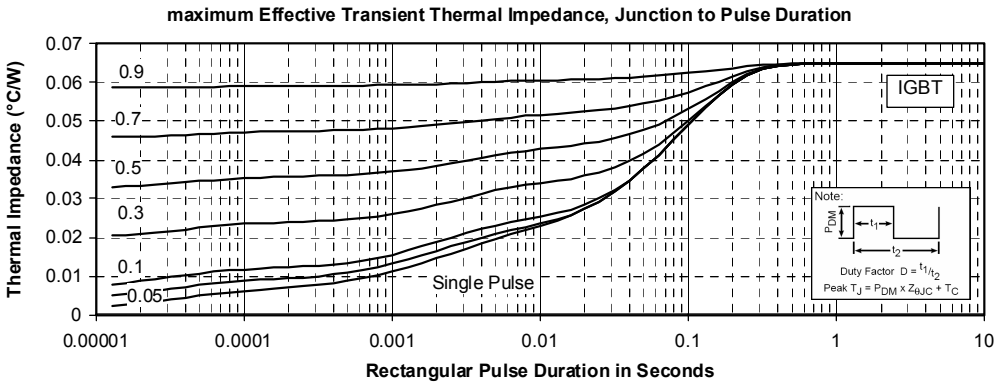

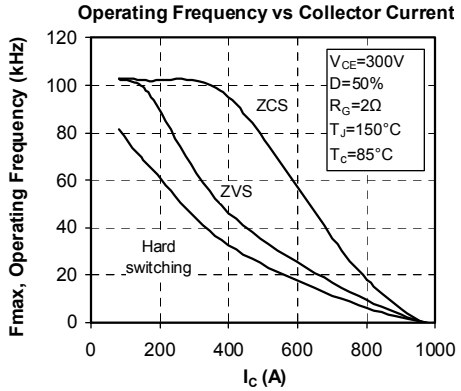

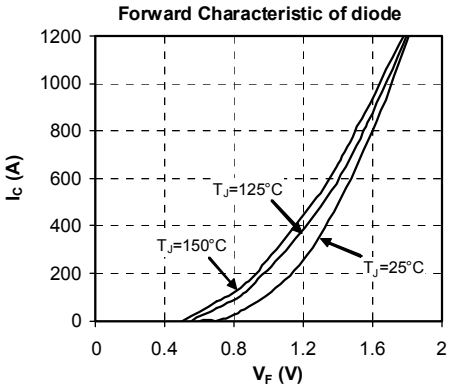

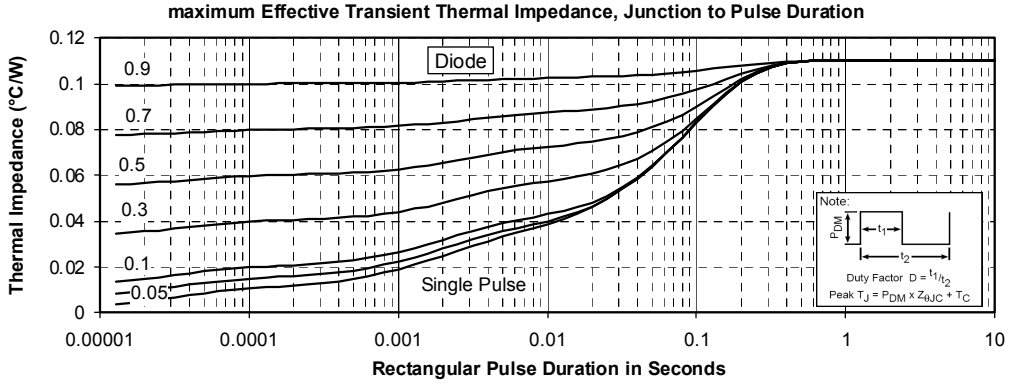

APT reserves the right to change, without notice, the specifications and information contained herein

APT's products are covered by one or more of U.S patents 4,895,810 5,045,903 5,089,434 5,182,234 5,019,522 5,262,336 6,503,786 5,256,583 4,748,103 5,283,202 5,231,474 5,434,095 5,528,058 and foreign patents. U.S and Foreign patents pending. All Rights Reserved.