APTGT300DU60

Dual common source Trench + Field Stop IGBT® Power Module

V_{CES} = 600V
I_C = 300A @ Tc = 80°C

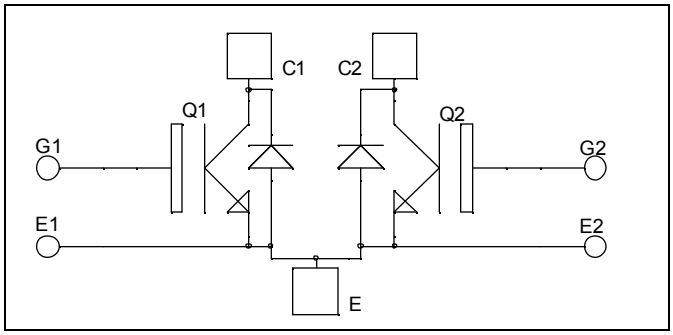

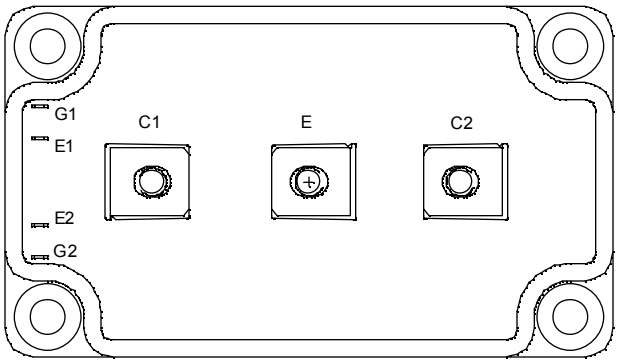

Application

- AC Switches
- Switched Mode Power Supplies
- Uninterruptible Power Supplies

Features

- Trench + Field Stop IGBT® Technology
  - Low voltage drop
  - Low tail current
  - Switching frequency up to 20 kHz
  - Soft recovery parallel diodes
  - Low diode VF
  - Low leakage current
  - Avalanche energy rated
  - RBSOA and SCSOA rated
- Kelvin emitter for easy drive
- Very low stray inductance
  - Symmetrical design
  - M5 power connectors
- High level of integration

Benefits

- Stable temperature behavior
- Very rugged
- Direct mounting to heatsink (isolated package)
- Low junction to case thermal resistance
- Easy paralleling due to positive TC of VCEsat
- Low profile

Absolute maximum ratings

Symbol	*Parameter*		*Max ratings*	*Unit*
V_{CES}	Collector - Emitter Breakdown Voltage		600	V
I_C	Continuous Collector Current	T_C = 25°C	430	A
		T_C = 80°C	300	
I_{CM}	Pulsed Collector Current	T_C = 25°C	500	
V_{GE}	Gate – Emitter Voltage		±20	V
P_D	Maximum Power Dissipation	T_C = 25°C	1150	W
RBSOA	Reverse Bias Safe Operating Area	T_j = 150°C	600A @ 550V	

CAUTION: These Devices are sensitive to Electrostatic Discharge. Proper Handing Procedures Should Be Followed.

All ratings @ T_j = 25°C unless otherwise specified

Electrical Characteristics

Symbol	*Characteristic*	*Test Conditions*		*Min*	*Typ*	*Max*	*Unit*
I_{CES}	Zero Gate Voltage Collector Current	V_{GE} = 0V, V_{CE} = 600V				350	µA
$V_{CE(sat)}$	Collector Emitter Saturation Voltage	V_{GE} =15V I_C = 300A	T_j = 25°C		1.4	1.8	V
			T_j = 150°C		1.5		
$V_{GE(th)}$	Gate Threshold Voltage	V_{GE} = V_{CE}, I_C = 1.5 mA		5.0	5.8	6.5	V
I_{GES}	Gate – Emitter Leakage Current	V_{GE} = 20V, V_{CE} = 0V				500	nA

Dynamic Characteristics

Symbol	*Characteristic*	*Test Conditions*	*Min*	*Typ*	*Max*	*Unit*
C_{ies}	Input Capacitance	V_{GE} = 0V V_{CE} = 25V f = 1MHz		24		nF
C_{oes}	Output Capacitance			1.5		
C_{res}	Reverse Transfer Capacitance			0.75		
$T_{d(on)}$	Turn-on Delay Time	Inductive Switching (25°C) V_{GE} = ±15V V_{Bus} = 300V I_C = 300A R_G = 3.3Ω		115		ns
T_r	Rise Time			45		
$T_{d(off)}$	Turn-off Delay Time			200		
T_f	Fall Time			55		
$T_{d(on)}$	Turn-on Delay Time	Inductive Switching (150°C) V_{GE} = ±15V V_{Bus} = 300V I_C = 300A R_G = 3.3Ω		120		ns
T_r	Rise Time			50		
$T_{d(off)}$	Turn-off Delay Time			250		
T_f	Fall Time			70		
E_{on}	Turn on Energy			5.2		mJ
E_{off}	Turn off Energy			10.5		

Reverse diode ratings and characteristics

Symbol	*Characteristic*	*Test Conditions*		*Min*	*Typ*	*Max*	*Unit*
V_{RRM}	Maximum Peak Repetitive Reverse Voltage			600			V
I_{RM}	Maximum Reverse Leakage Current	V_R=600V	T_j = 25°C			350	µA
			T_j = 150°C			600	
$I_{F(AV)}$	Maximum Average Forward Current	50% duty cycle	Tc = 80°C		300		A
V_F	Diode Forward Voltage	I_F = 300A V_{GE} = 0V	T_j = 25°C		1.5	1.9	V
			T_j = 150°C		1.4		
t_{rr}	Reverse Recovery Time	I_F = 300A V_R = 300V di/dt =3100A/µs	T_j = 25°C		120		ns
			T_j = 150°C		210		
Q_{rr}	Reverse Recovery Charge		T_j = 25°C		13.5		µC
			T_j = 150°C		28.5		

Thermal and package characteristics

Symbol	*Characteristic*			*Min*	*Typ*	*Max*	*Unit*
R_{thJC}	Junction to Case		IGBT			0.13	°C/W
			Diode			0.21	
V_{ISOL}	RMS Isolation Voltage, any terminal to case t =1 min, I isol<1mA, 50/60Hz			2500			V
T_J	Operating junction temperature range			-40		175	°C
T_{STG}	Storage Temperature Range			-40		125	
T_C	Operating Case Temperature			-40		100	
Torque	Mounting torque	To heatsink	M6	3		5	N.m
		For terminals	M5	2		3.5	
Wt	Package Weight					280	g

Package outline (dimensions in mm)

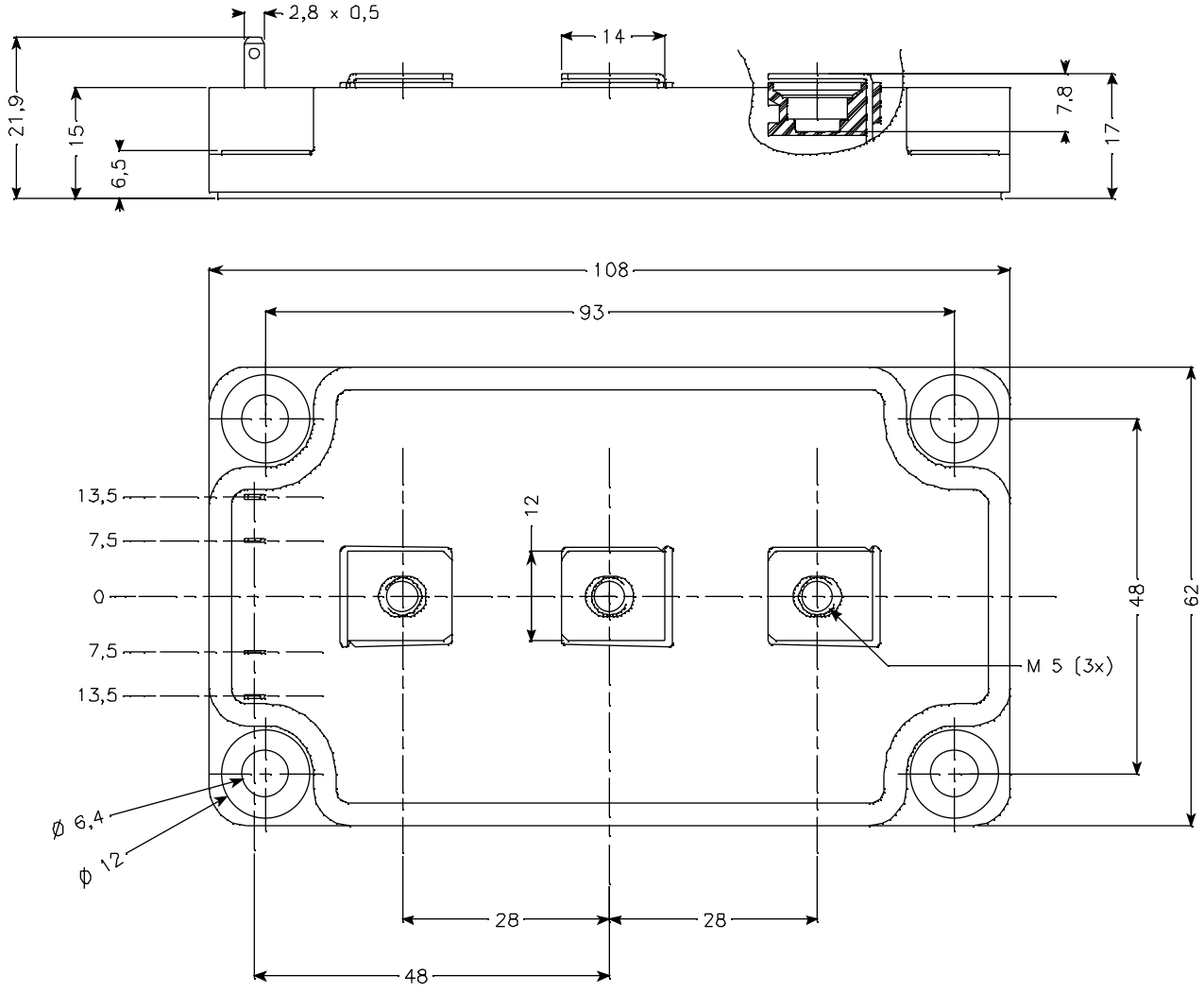

Typical Performance Curve

Output Characteristics (V_{GE}=15V)

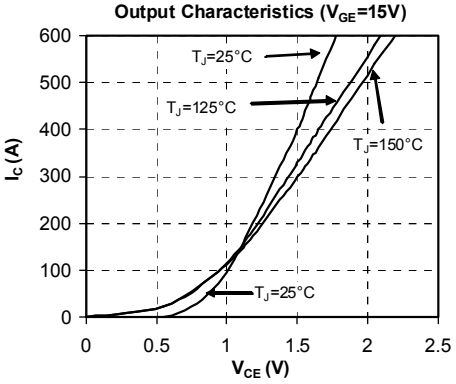

Output Characteristics

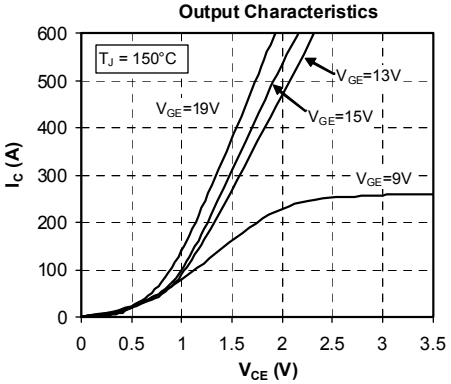

Transfert Characteristics

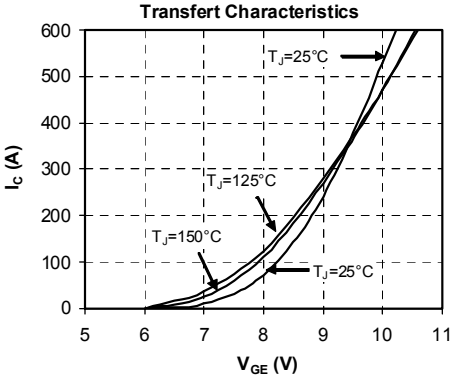

Energy losses vs Collector Current

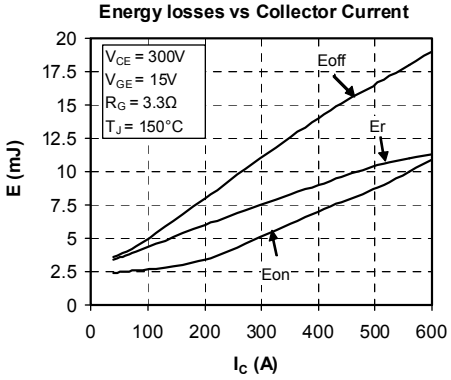

Switching Energy Losses vs Gate Resistance

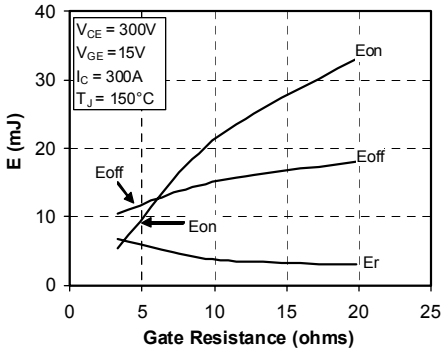

Reverse Bias Safe Operating Area

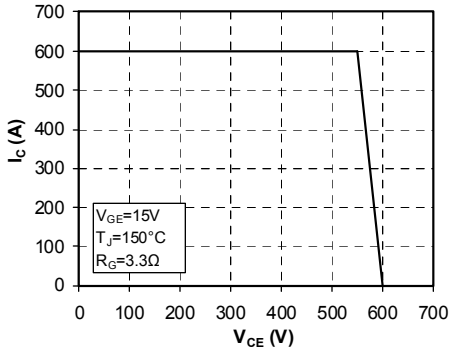

maximum Effective Transient Thermal Impedance, Junction to Pulse Duration

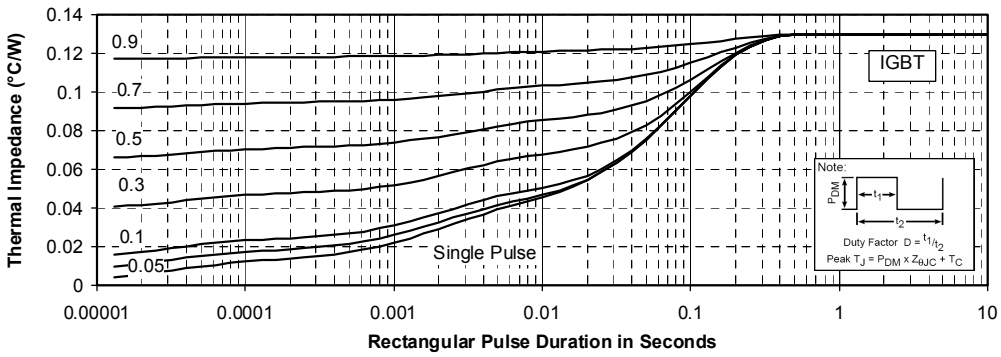

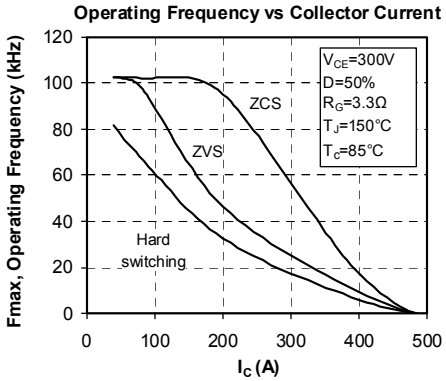

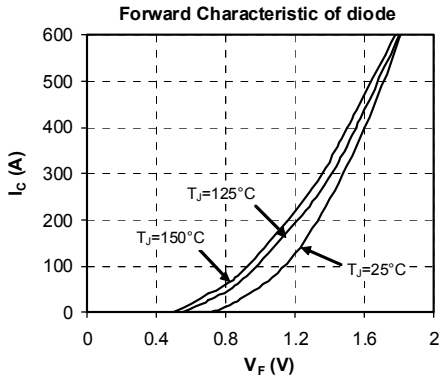

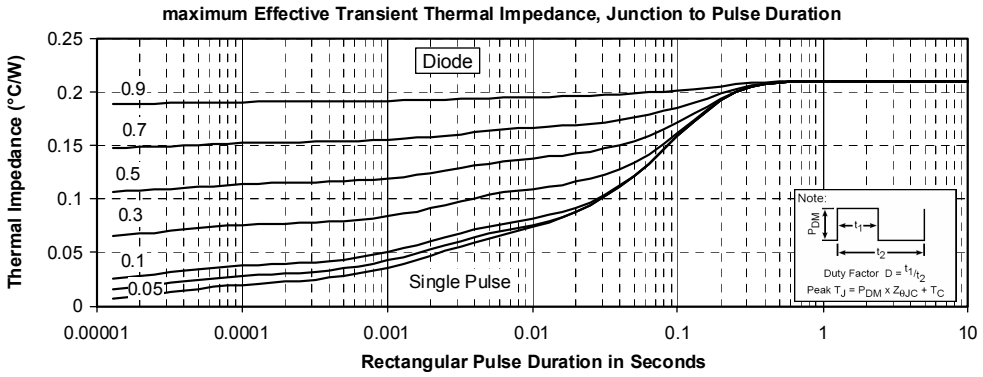

APT reserves the right to change, without notice, the specifications and information contained herein

APT's products are covered by one or more of U.S patents 4,895,810 5,045,903 5,089,434 5,182,234 5,019,522 5,262,336 6,503,786 5,256,583 4,748,103 5,283,202 5,231,474 5,434,095 5,528,058 and foreign patents. U.S and Foreign patents pending. All Rights Reserved.