ADVANCED POWER TECHNOLOGY®

600V 2x15A
APT15D60BCT
APT15D60BCTG*
***G Denotes RoHS Compliant, Pb Free Terminal Finish.**

ULTRAFAST SOFT RECOVERY RECTIFIER DIODE

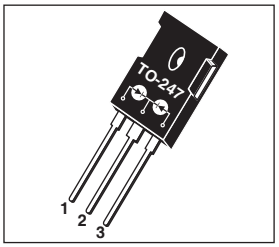

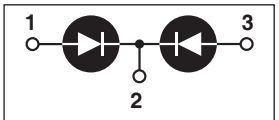

1 - Anode 1
2 - Common Cathode
Back of Case - Cathode
3 - Anode 2

PRODUCT APPLICATIONS

- Anti-Parallel Diode
  - -Switchmode Power Supply
  - -Inverters
- Free Wheeling Diode
  - -Motor Controllers
  - -Converters
  - -Inverters
- Snubber Diode
- PFC

PRODUCT FEATURES

- Ultrafast Recovery Times
- Soft Recovery Characteristics
- Popular TO-247 Package
- Low Forward Voltage
- Low Leakage Current

PRODUCT BENEFITS

- Low Losses
- Low Noise Switching
- Cooler Operation
- Higher Reliability Systems
- Increased System Power Density

MAXIMUM RATINGS

All Ratings Per Leg: T_C = 25°C unless otherwise specified.

Symbol	Characteristic / Test Conditions	APT15D60BCT(G)	UNIT
V_R	Maximum D.C. Reverse Voltage	600	Volts
V_{RRM}	Maximum Peak Repetitive Reverse Voltage		
V_{RWM}	Maximum Working Peak Reverse Voltage		
$I_{F(AV)}$	Maximum Average Forward Current (T_C = 133°C, Duty Cycle = 0.5)	15	Amps
$I_{F(RMS)}$	RMS Forward Current (Square wave, 50% duty)	32	
I_{FSM}	Non-Repetitive Forward Surge Current (T_J = 45°C, 8.3ms)	110	
T_J,T_{STG}	Operating and StorageTemperature Range	-55 to 175	°C
T_L	Lead Temperature for 10 Sec.	300	

STATIC ELECTRICAL CHARACTERISTICS

Symbol	Characteristic / Test Conditions		MIN	TYP	MAX	UNIT
V_F	Forward Voltage	I_F = 15A		1.6	1.8	Volts
		I_F = 60A		1.9		
		I_F = 15A, T_J = 125°C		1.4		
I_{RM}	Maximum Reverse Leakage Current	V_R = V_R Rated			250	µA
		V_R = V_R Rated, T_J = 125°C			500	
C_T	Junction Capacitance, V_R = 200V			23		pF

DYNAMIC CHARACTERISTICS

APT15D60BCT(G)

Symbol	Characteristic	Test Conditions	MIN	TYP	MAX	UNIT
t_{rr}	Reverse Recovery Time	I_F = 1A, di_F/dt = -100A/µs, V_R = 30V, T_J = 25°C	-	21		ns
t_{rr}	Reverse Recovery Time	I_F = 15A, di_F/dt = -200A/µs, V_R = 400V, T_C = 25°C	-	80		ns
Q_{rr}	Reverse Recovery Charge		-	95		nC
I_{RRM}	Maximum Reverse Recovery Current		-	3	-	Amps
t_{rr}	Reverse Recovery Time	I_F = 15A, di_F/dt = -200A/µs, V_R = 400V, T_C = 125°C	-	150		ns
Q_{rr}	Reverse Recovery Charge		-	520		nC
I_{RRM}	Maximum Reverse Recovery Current		-	7	-	Amps
t_{rr}	Reverse Recovery Time	I_F = 15A, di_F/dt = -1000A/µs, V_R = 400V, T_C = 125°C	-	60		ns
Q_{rr}	Reverse Recovery Charge		-	810		nC
I_{RRM}	Maximum Reverse Recovery Current		-	22		Amps

THERMAL AND MECHANICAL CHARACTERISTICS

Symbol	Characteristic / Test Conditions	MIN	TYP	MAX	UNIT
$R_{\theta JC}$	Junction-to-Case Thermal Resistance			1.35	°C/W
$R_{\theta JA}$	Junction-to-Ambient Thermal Resistance			40	°C/W
W_T	Package Weight		0.22		oz
			5.9		g
Torque	Maximum Mounting Torque			10	lb•in
				1.1	N•m

APT Reserves the right to change, without notice, the specifications and information contained herein.

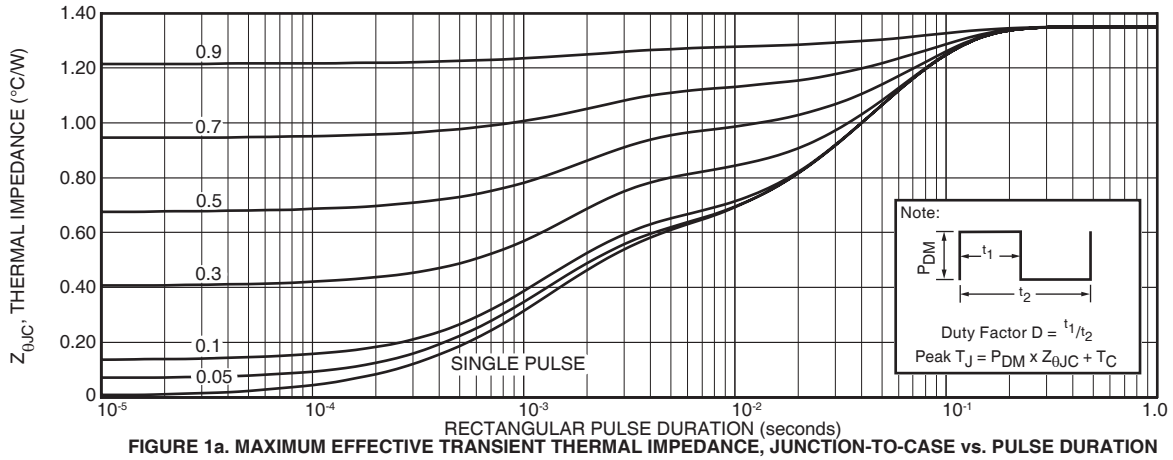

FIGURE 1a. MAXIMUM EFFECTIVE TRANSIENT THERMAL IMPEDANCE, JUNCTION-TO-CASE vs. PULSE DURATION

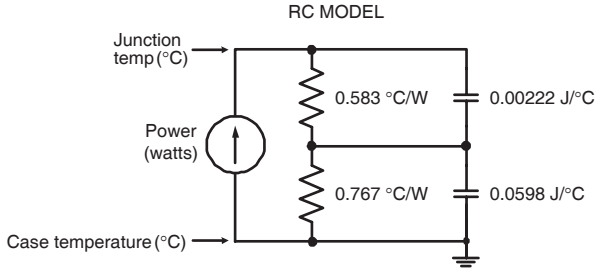

FIGURE 1b, TRANSIENT THERMAL IMPEDANCE MODEL

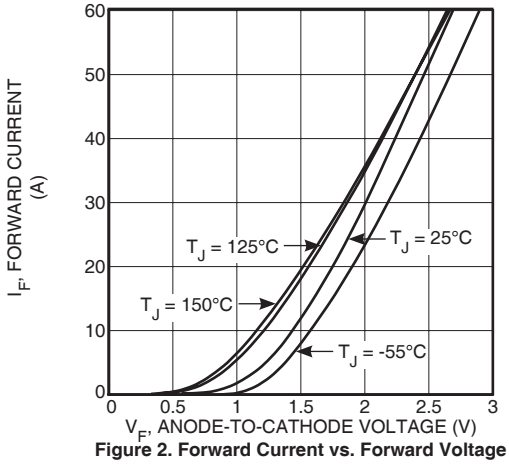

Figure 2. Forward Current vs. Forward Voltage

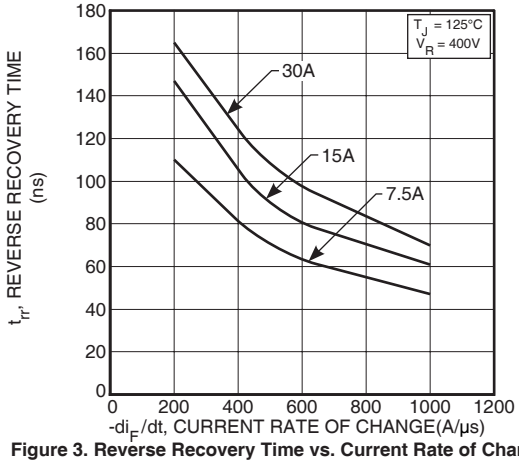

Figure 3. Reverse Recovery Time vs. Current Rate of Change

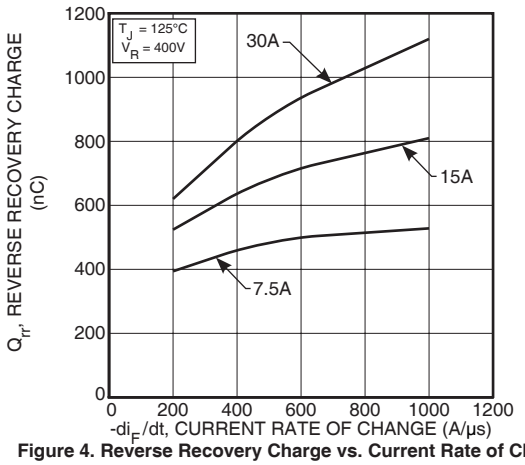

Figure 4. Reverse Recovery Charge vs. Current Rate of Change

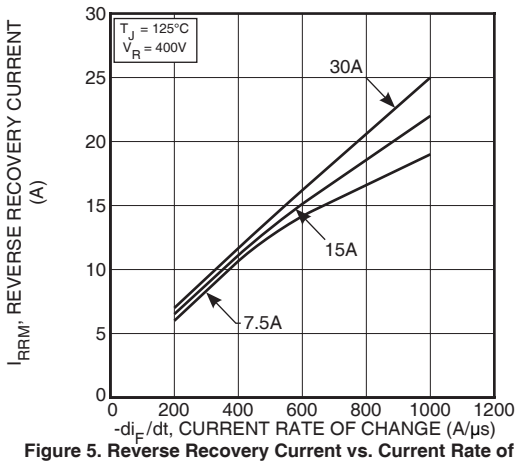

Figure 5. Reverse Recovery Current vs. Current Rate of Change

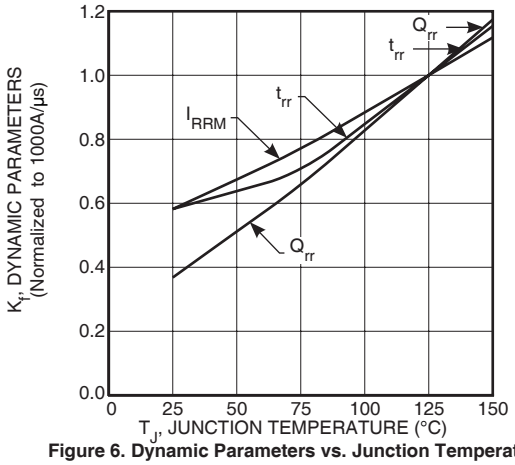

Figure 6. Dynamic Parameters vs. Junction Temperature

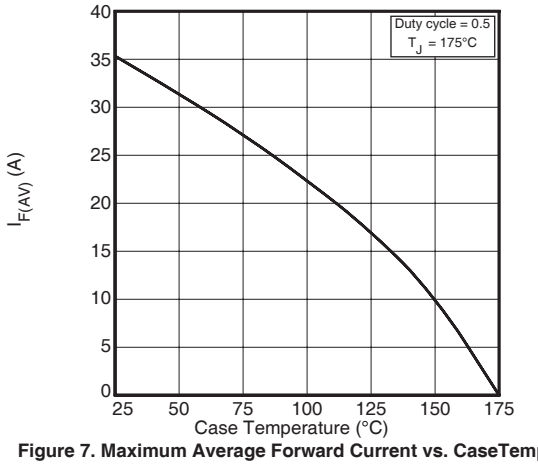

Figure 7. Maximum Average Forward Current vs. CaseTemperature

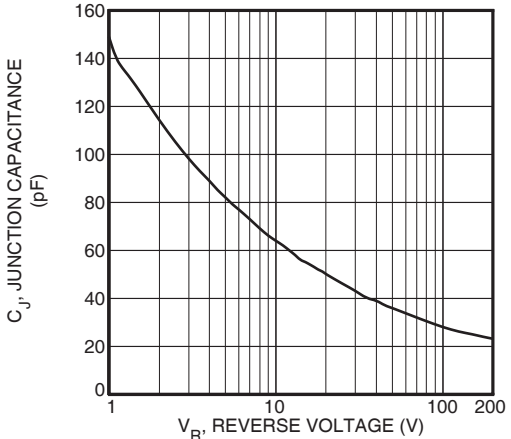

Figure 8. Junction Capacitance vs. Reverse Voltage

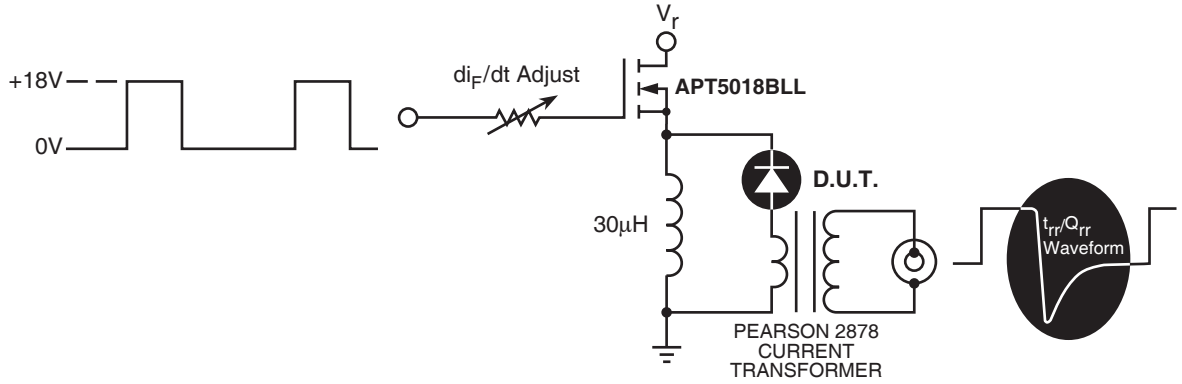

Figure 9. Diode Test Circuit

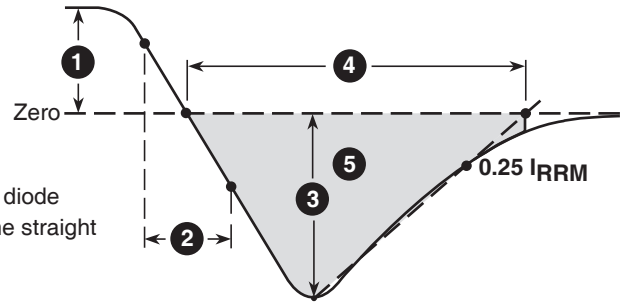

1. I_F - Forward Conduction Current
2. di_F/dt - Rate of Diode Current Change Through Zero Crossing.
3. I_{RRM} - Maximum Reverse Recovery Current.
4. t_{rr} - Reverse Recovery Time, measured from zero crossing where diode current goes from positive to negative, to the point at which the straight line through I_{RRM} and $0.25 \bullet I_{RRM}$ passes through zero.
5. Q_{rr} - Area Under the Curve Defined by I_{RRM} and t_{rr}.

Figure 10, Diode Reverse Recovery Waveform and Definitions

TO-247 Package Outline

(e1) SAC: Tin, Silver, Copper

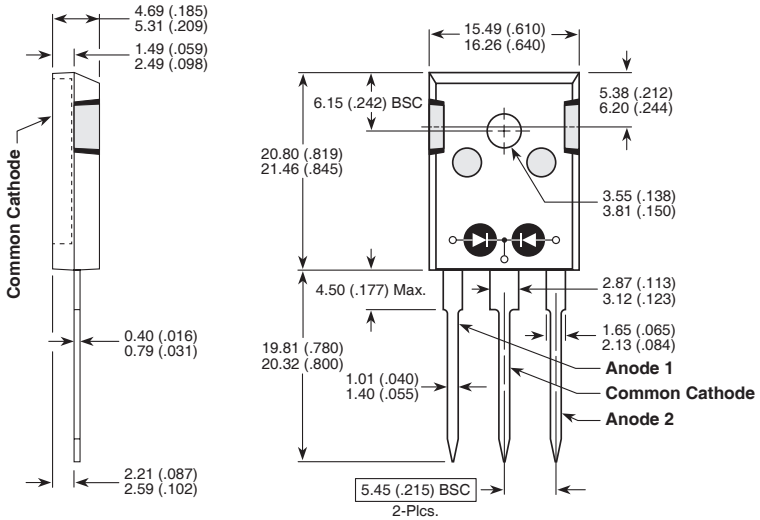

Dimensions in Millimeters and (Inches)

APT's products are covered by one or more of U.S.patents 4,895,810 5,045,903 5,089,434 5,182,234 5,019,522 5,262,336 6,503,786 5,256,583 4,748,103 5,283,202 5,231,474 5,434,095 5,528,058 and foreign patents. US and Foreign patents pending. All Rights Reserved.