10/100Base-T Single Port LAN Transformer
Extended Temperature

APT-106

RoHS/RoHS II Compliant



12.70 x 9.40 x 5.70mm

FEATURES:

- Meet IEEE802.3 specification
- Extended Temperature (-40°C - +85°C)
- ROHS peak reflow temperature rating 245°C
- 1500Vrms Hi-Pot

APPLICATIONS:

- Designed for most leading PHY IC manufacturers such as Broadcom, Marvell, Micrel, & Microsemi
- 10/100Base-T Ethernet-LAN
- VoIP
- Symmetrical Tx & RX channles for Auto MDI/MDIX capability
- Provides signal conditioning, EMI suppression and signal isolation.
- Hubs/Switches/Routers/Servers/NIC Cards

STANDARD SPECIFICATIONS:

Parameters	Minimum	Typical	Maximum	Units	Notes
Operating Temperature	-40		+85	°C	
Storage Temperature	-40		+85	°C	
Inductance	350			µH	100KHz,/0.1V@ 8mA
Leakage Inductance			0.4	µH	100KHz/0.1V
Cw/w			25	pF	100KHz/0.1V
DC Resistance			1.5	Ω	
Insertion Loss			-1.1	dB	0.3-100MHz
Return Loss		-20		dB	30MHz
		-14			60MHz
		-11.5			80MHz
Cross Talk	-45			dB	30MHz
	-40				60MHz
	-27				100MHz
Differential to Common Mode Rejection	-42			dB	30MHz
	-37				50MHz
	-33				100MHz
Common Mode Rejection	-30			dB	1-100MHz
Turns Ratio (± 2%)	1CT: 1CT				
Hi-Pot	1500Vrms/0.5mA/60Sec or 1650Vrms/0.5mA/2Sec				

OUTLINE DRAWING:

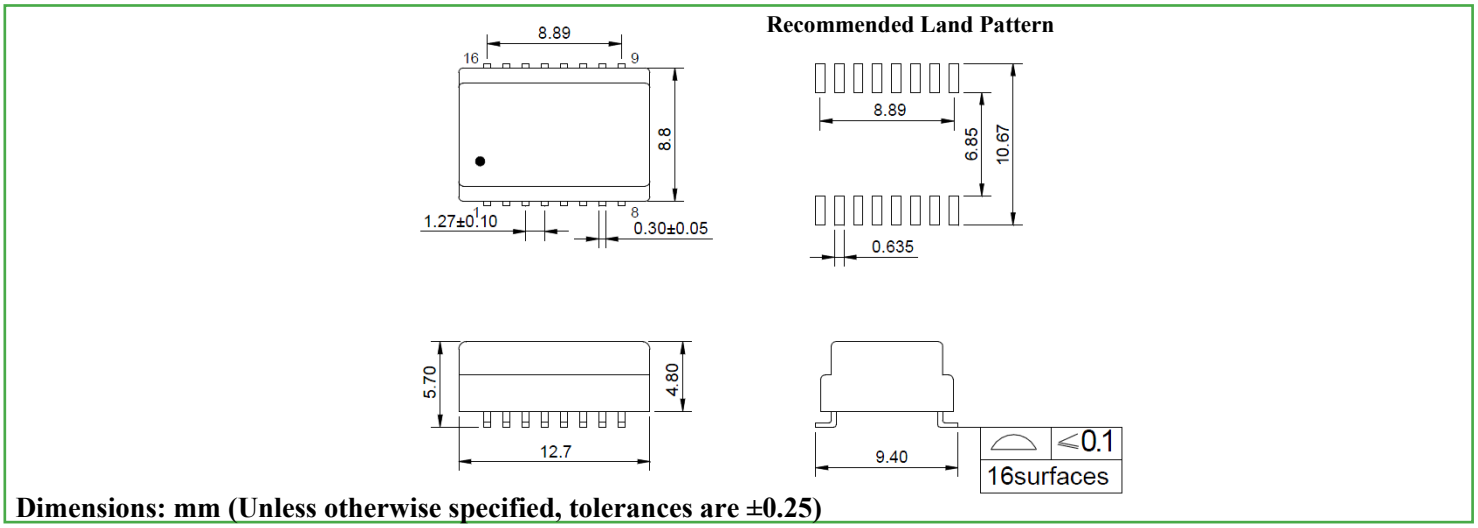

Dimensions: mm (Unless otherwise specified, tolerances are ±0.25)

ABRACON IS ISO9001:2008 CERTIFIED

ABRACON® LLC
The Power of Linking Together

2 Faraday, Suite# B | Irvine | CA 92618 **Revised: 03.24.15**
Ph. 949.546.8000 | Fax. 949.546.8001
Visit www.abracon.com for Terms and Conditions of Sale

10/100Base-T Single Port LAN Transformer
Extended Temperature

APT-106

RoHS/RoHS II Compliant



12.70 x 9.40 x 5.70mm

SCHEMATIC:

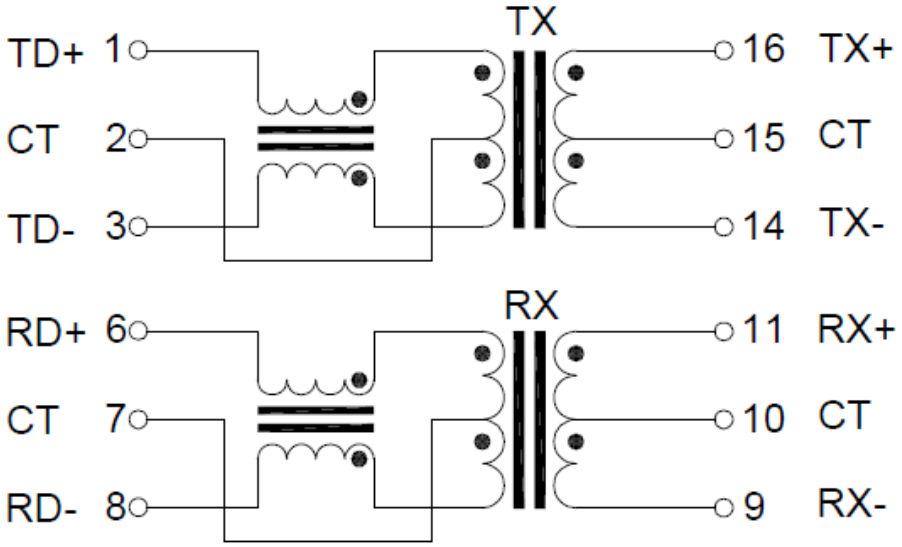

REFLOW PROFILE:

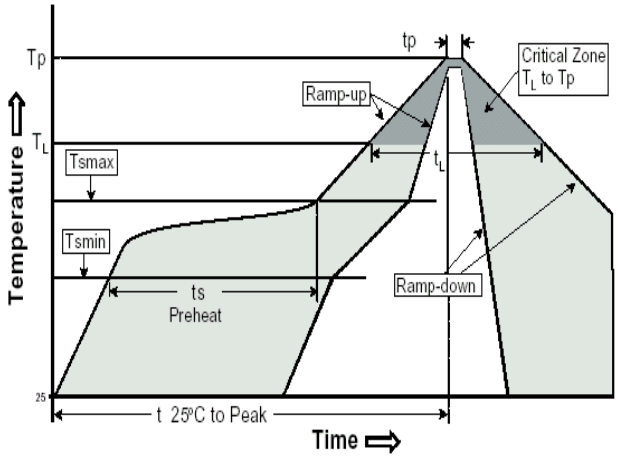

Profile Feature	Pb-Free Assembly
Average Ramp-Up Rate (Ts_{max} to Tp)	3°C /second max.
Preheat -Temperature Min (Ts_{min}) -Temperature Max (Ts_{max}) -Time (ts_{min} to ts_{max})	 150°C 200°C 60-120 seconds
Time maintained above: -Temperature (T_L) -Time (t_L)	 217°C 60-150 seconds
Peak/Classification Temperature (Tp)	245±5°C
Time within 5°C of actual Peak Temperature (tp)	20-40 seconds
Ramp-Down Rate	6°C /seconds max
Time 25°C to Peak Temperature	8 minutes max.

2 Faraday, Suite# B | Irvine | CA 92618 **Revised: 03.24.15**
Ph. 949.546.8000 | Fax. 949.546.8001

Visit www.abracon.com for Terms and Conditions of Sale

10/100Base-T Single Port LAN Transformer
Extended Temperature

APT-106

RoHS/RoHS II Compliant



12.70 x 9.40 x 5.70mm

TAPE & REEL:

Packing Option I: **700 pcs / reel**
Weight: **0.7 grams / pcs**

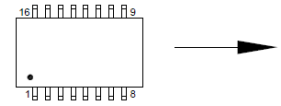

Mechanicals

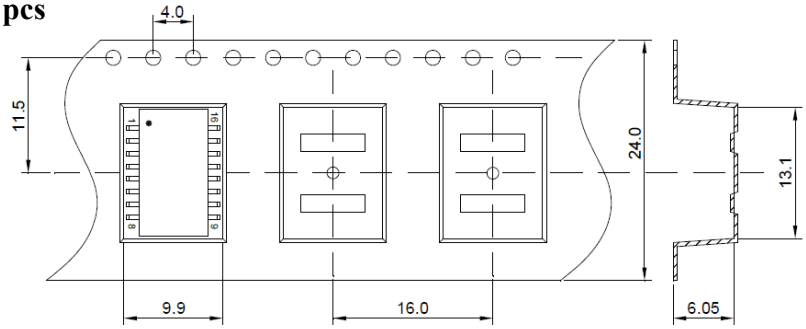

Tape & Reel

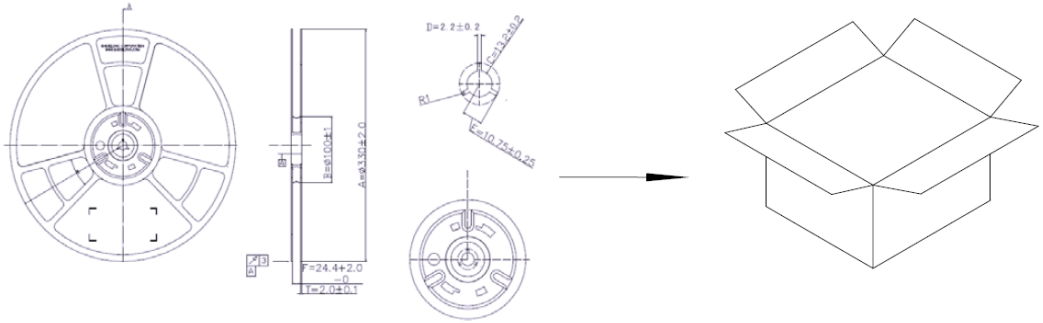

Packing Option II: **36 pcs / tube**
Weight: **0.7 grams / pcs**

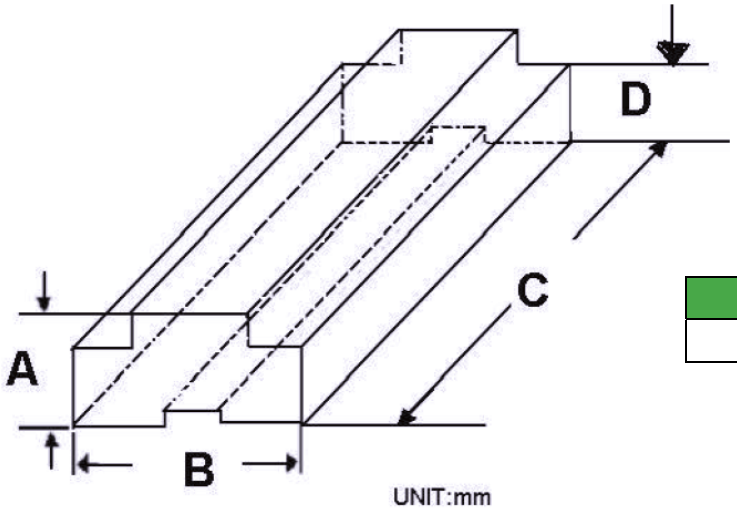

A	B	C	D
9.20	13.70	485.0	6.0

Dimensions: mm

ATTENTION: Abracon Corporation's products are COTS – Commercial-Off-The-Shelf products; suitable for Commercial, Industrial and, where designated, Automotive Applications. Abracon's products are not specifically designed for Military, Aviation, Aerospace, Life-dependant Medical applications or any application requiring high reliability where component failure could result in loss of life and/or property. For applications requiring high reliability and/or presenting an extreme operating environment, written consent and authorization from Abracon Corporation is required. Please contact Abracon Corporation for more information.