# AC Current transducer APR-B420L

# $I_{PN}$ = 10 .. 400 A

Split core transducer for the electronic measurement distorted AC waveforms current, with galvanic isolation between the primary (High power) and the secondary circuits (Electronic circuit). Switch selectable ranges and True RMS 4-20mA current output.

**Preliminary**

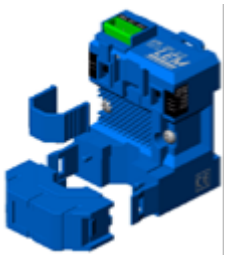

## Electrical data

| Primary Nominal Current $I_{PN}$ (A.t.RMS) | Analogue Output Signal $I_{OUT}$ (mA) | Type |
|---|---|---|
| 10,25,50 | 4-20 | **APR 50 B420L** |
| 50,75,100 | 4-20 | **APR 100 B420L** |
| 100,150,200 | 4-20 | **APR 200 B420L** |
| 200,300,400 | 4-20 | **APR 400 B420L** |

| | | | |
|---|---|---|---|
| $R_L$ | Load resistance | < 350 | Ω |
| $V_C$ | Supply voltage (loop powered) | +24 | V DC |
| $V_d$ | R.m.s. voltage for AC isolation test, 50/60Hz, 1 mn | 5 | kV |
| | Limitation of output current | < 25 | mA |

## Accuracy-Dynamic performance data

| | | | |
|---|---|---|---|
| **X** | Accuracy @ $I_{PN}$, $T_A$ = 25°C (without offset) | < ±1 | % of $I_{PN}$ |
| $\varepsilon_L$ | Linearity (0 .. ± $I_{PN}$) | < ±0.5 | % of $I_{PN}$ |
| $I_{OE}$ | Electrical offset current, $T_A$ = 25°C | 4 | mA |
| $I_{OT}$ | Thermal drift of $I_{OE}$ | ±1 | µA/K |
| $TCE_G$ | Thermal drift of the gain (% of reading) | ±0.1 | %/K |
| $t_r$ | Response time @ 90% of $I_P$ | < 1000 | ms |
| **f** | Frequency bandwidth (-3 dB) | 10 .. 6000 | Hz |

## General data

| | | | |
|---|---|---|---|
| $T_A$ | Ambient operating temperature | -20 .. +60 | °C |
| $T_S$ | Ambient storage temperature | -20 .. +85 | °C |
| **m** | Mass | 90 | g |
| | Protection type | IP20 | |
| | Reliable isolation according to EN50178, EN61010 | 300 | V AC |
| | Creepage distance | > 5.5 | mm |
| | EMC in accordance with EN50082-2 | | |
| | Plastic according to UL94V0, CTI 1 | | |

Notes : Installation and maintenance should be done with power supply disconnected.

## Features

- VFD and SCR waveforms current measurement
- True RMS output
- Split core type
- Loop powered 4-20mA current output
- DIN mounting & Panel mounting
- Eliminates insertion loss
- Switch selectable ranges

## Advantages

- Large aperture for cable up to Ø18mm
- High isolation between primary and secondary circuits
- Easy to mount

## Applications

- VFD Controlled Loads:
  VFD output indicates how the motor and attached load are operating.
- SCR Controlled Loads:
  Acurate measurement of phase angle fired or burst fired (time proportioned) SCRs. Current measurement gives faster response than temperature measurement.
- Switching Power Supplies and Electronic Ballasts:
  True RMS sensing is the most accurate way to measure power supply or ballast input power.

## Dimensions AP(R)-B420L (unit : mm, 1mm = 0.0394 inch)

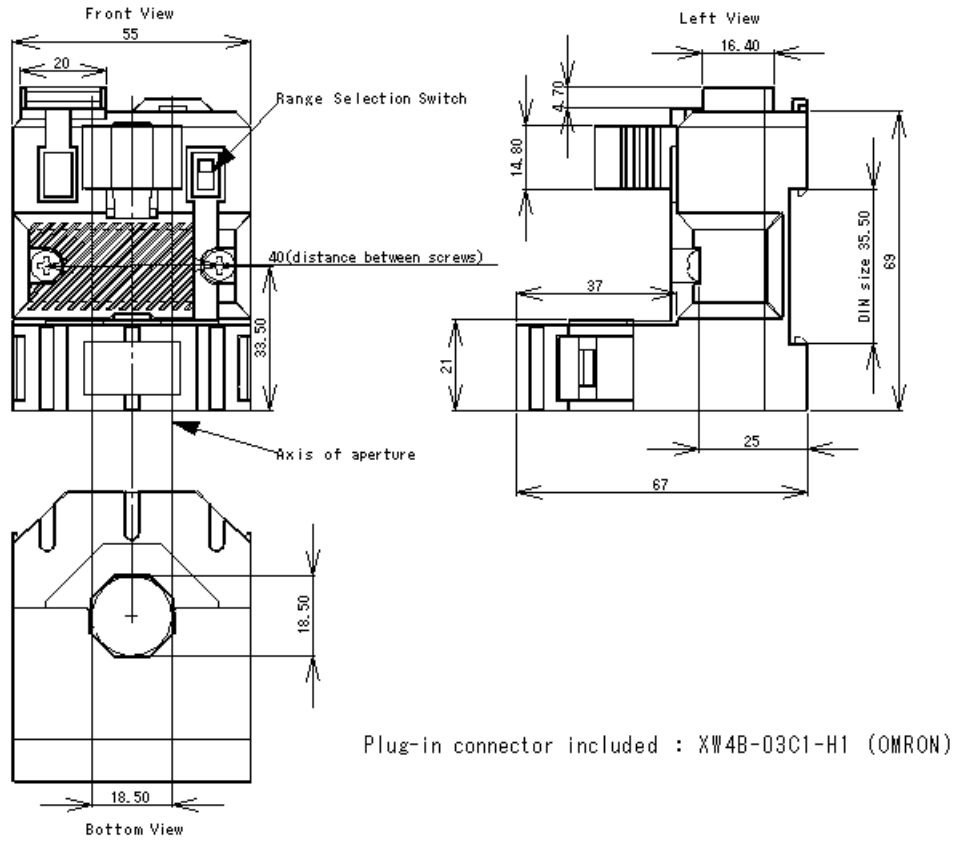


## Mechanical characteristics

- General tolerance ±1 mm
- Primary aperture ∅ 18.5 mm
- Panel mounting 2 holes ∅ 4.0 mm
- Distance between holes 40.0 mm

For panel mounting, replace M4 screws by new one (not supplied) with appropriate length to panel´s thickness.

## Connections

- Wires up to 2 mm ∅

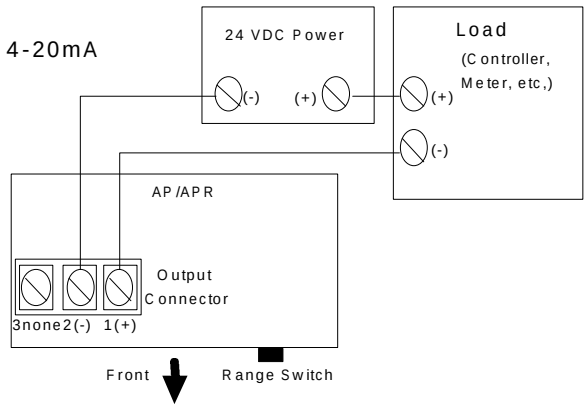


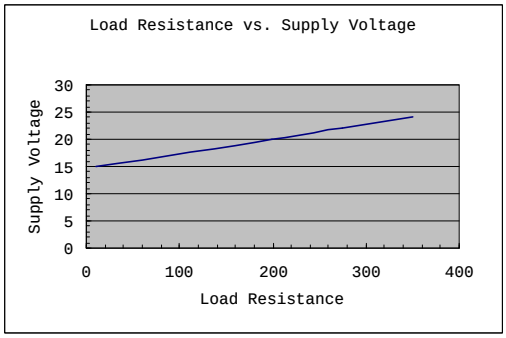


LEM reserves the right to carry out modifications on its transducers, in order to improve them, without previous notice.