plerow™ APM0923-P29

High OIP3
Medium Power Amplifier Module

Features

- S_{21} = 33.05 dB @ 920 MHz
  = 32.95 dB @ 925 MHz
- NF of 6.5 dB over Frequency
- Unconditionally Stable
- Single 5V Supply
- High OIP3 @ Low Current

Description

The plerow™ APM-Series is an internally matched amplifier mini-module for such application band in SMD package with the output P1dB of 29 dBm. It is compactly designed for low current consumption and high OIP3. Integrating all the components for biasing and matching within the module enhances production yield and throughput as well. It passes through the stringent DC, RF, and reliability tests. Not sample test but 100% quality control test is made before packing.

RoHS-compliant



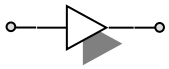

1-stage Single Type

Specifications (in Production)

Typ. @ T = 25°C, V_s = 5 V, Freq. = 922.5 MHz, $Z_{o.sys}$ = 50 ohm

Parameter	Unit	Specifications		
		Min	Typ	Max
Frequency Range	MHz	920		925
Gain	dB	32.0	33.0	
Gain Flatness	dB		± 0.05	± 0.1
Noise Figure	dB		6.5	7.0
Output IP3 (1)	dBm	45.5	48.5	
S11 / S22 (2)	dB			-19 / -10
Output P1dB	dBm	29	30	
Switching Time (3)	μsec		-	
Supply Current	mA		380	400
Supply Voltage	V	5		
Impedance	Ω	50		
Max. RF Input Power	dBm	C.W 23 ~ 25 (before fail)		
Package Type & Size	mm	Surface Mount Type, 10Wx10Lx3.8H		

Operating temperature is -40°C to +85°C.
1) OIP3 is measured with two tones at an output power of 12 dBm / tone separated by 1 MHz.
2) S11/S22 (max) is the worst value within the frequency band.
3) Switching time means the time that takes for output power to get stabilized to its final level after switching DC voltage from 0 V to V_S.

More Information

Website: www.asb.co.kr
E-mail: sales@asb.co.kr

Tel: (82) 42-528-7223
Fax: (82) 42-528-7222

Outline Drawing (Unit: mm)

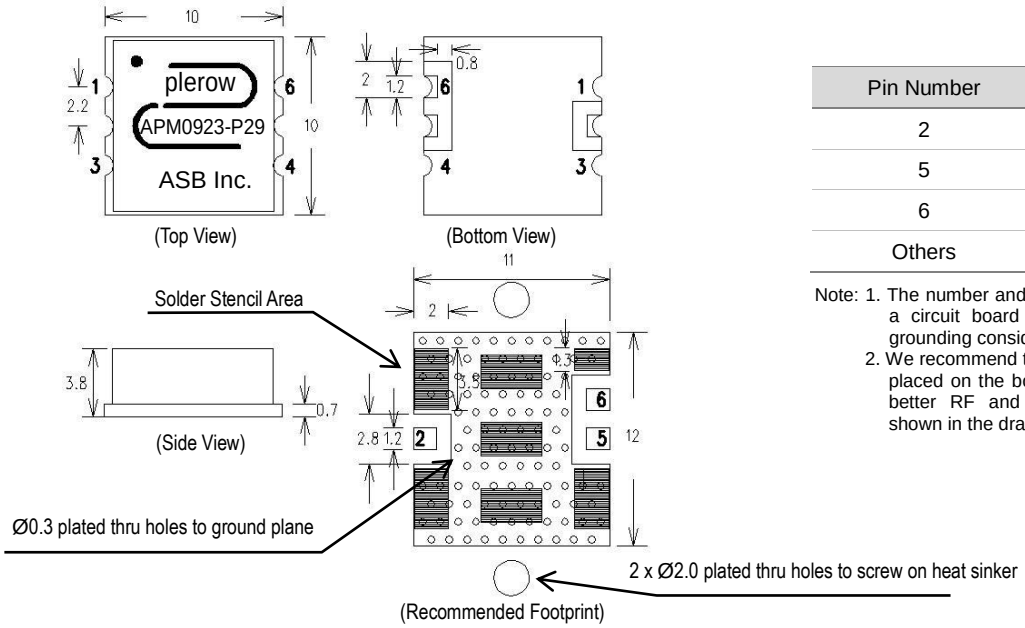

Pin Number	Function
2	RF In
5	RF Out
6	Vs
Others	Ground

Note: 1. The number and size of ground via holes in a circuit board is critical for thermal RF grounding considerations.
2. We recommend that the ground via holes be placed on the bottom of all ground pins for better RF and thermal performance, as shown in the drawing at the left side.

Typical Performance (Measured)

920~925 MHz
+5 V

S-parameters

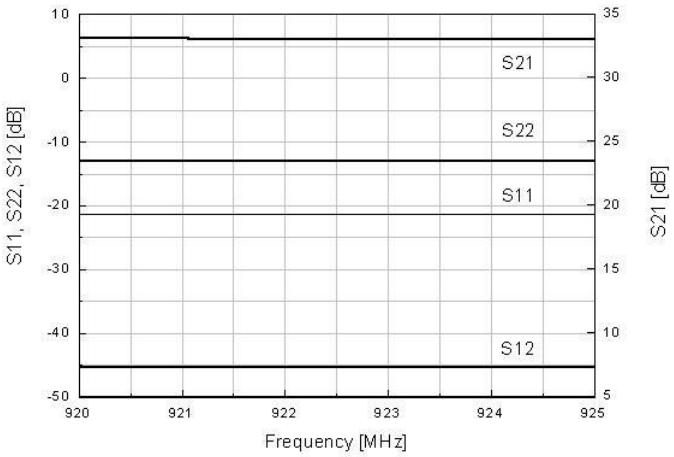

S-parameters & K Factor

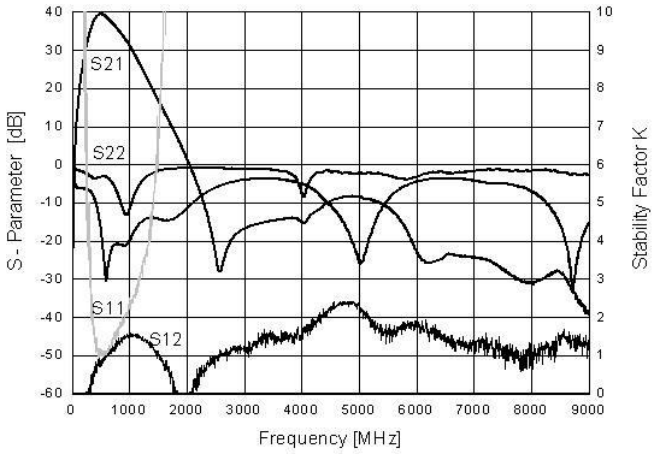

Noise Figure

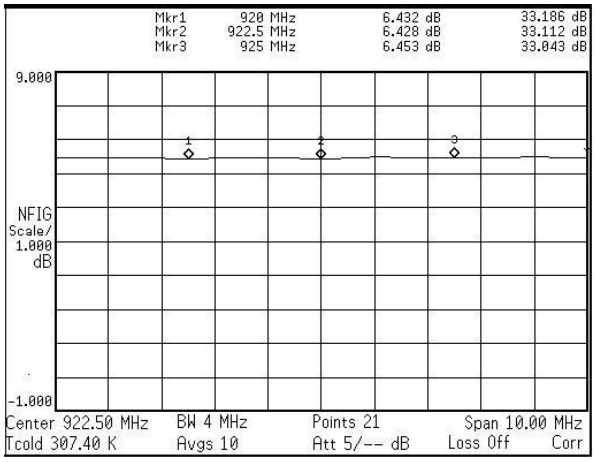

OIP3

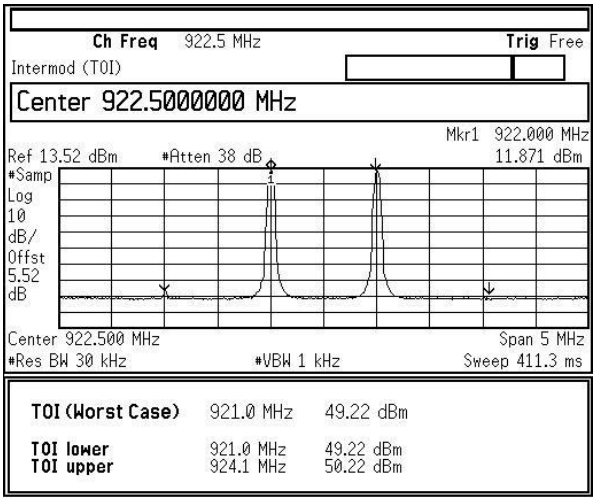

P1dB

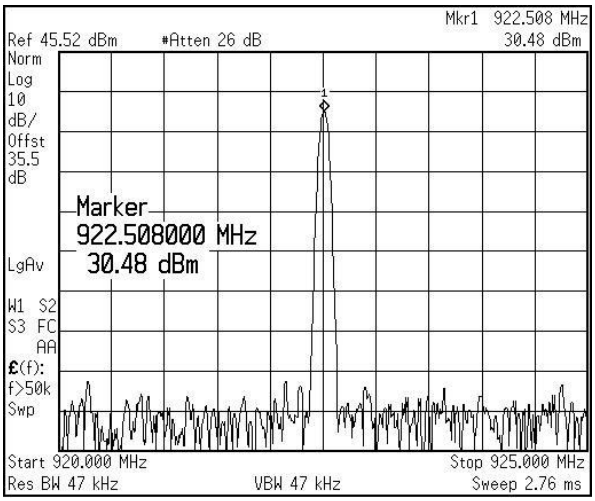

RF Performance with Voltage Change

1. S-parameter

	920 MHz			922.5 MHz				925 MHz		
	S21 (dB)	S11 (dB)	S22 (dB)	S21 (dB)	G/F (dB)	S11 (dB)	S22 (dB)	S21 (dB)	S11 (dB)	S22 (dB)
4.50 V	32.76	-20.36	-13.27	32.69	0.11	-20.31	-13.32	32.65	-20.36	-13.40
4.75 V	32.88	-20.82	-13.41	32.81	0.11	-20.82	-13.40	32.77	-20.74	-13.51
5.00 V	33.13	-21.22	-13.59	33.06	0.12	-21.21	-13.57	33.01	-21.14	-13.62
5.25 V	32.95	-21.29	-14.02	32.89	0.10	-21.36	-14.00	32.85	-21.28	-14.08
5.50 V	32.87	-21.07	-14.35	32.80	0.12	-21.23	-14.40	32.76	-21.07	-14.51

2. OIP3, P1dB & NF

	920 MHz			922.5 MHz			925 MHz		
	OIP3 (dBm)	P1dB (dBm)	NF (dB)	OIP3 (dBm)	P1dB (dBm)	NF (dB)	OIP3 (dBm)	P1dB (dBm)	NF (dB)
4.50 V	39.86	29.34	5.596	40.00	29.33	5.618	40.14	29.38	5.586
4.75 V	45.58	30.19	6.037	45.67	30.14	6.070	45.87	30.21	6.055
5.00 V	48.71	30.70	6.440	48.60	30.69	6.459	48.53	30.78	6.454
5.25 V	46.26	31.00	6.823	46.46	31.05	6.837	46.30	31.15	6.844
5.50 V	45.48	31.31	7.205	45.41	31.30	7.190	45.50	31.35	7.221

Note: tested at room temperature.

RF Performance with Operating Temperature

1. S-parameter

	920 MHz			922.5 MHz				925 MHz		
	S21 (dB)	S11 (dB)	S22 (dB)	S21 (dB)	G/F (dB)	S11 (dB)	S22 (dB)	S21 (dB)	S11 (dB)	S22 (dB)
-45 °C	34.51	-22.78	-11.09	34.45	0.13	-22.77	-11.13	34.38	-22.71	-11.15
-10 °C	33.98	-22.08	-11.91	33.92	0.12	-22.05	-11.94	33.86	-22.01	-11.97
25 °C	33.51	-21.00	-12.72	33.45	0.14	-21.04	-12.78	33.37	-21.11	-12.84
60 °C	32.79	-19.57	-13.97	32.73	0.14	-19.59	-13.99	32.65	-19.65	-14.00
85 °C	32.11	-18.99	-15.11	32.06	0.12	-19.04	-15.16	31.99	-19.02	-15.17

2. OIP3, P1dB & NF

	920 MHz			922.5 MHz			925 MHz		
	OIP3 (dBm)	P1dB (dBm)	NF (dB)	OIP3 (dBm)	P1dB (dBm)	NF (dB)	OIP3 (dBm)	P1dB (dBm)	NF (dB)
-45 °C	46.34	31.73	5.695	46.07	31.68	5.712	46.00	31.64	5.711
-10 °C	48.92	31.38	6.013	48.96	31.33	5.978	48.79	31.28	6.005
25 °C	48.93	31.45	6.397	49.61	31.33	6.398	48.64	31.23	6.401
60 °C	46.63	30.33	6.763	46.65	30.30	6.758	46.53	30.29	6.746
85 °C	45.22	30.18	6.984	45.27	30.14	7.011	45.30	30.09	6.997

Note: tested at V_s= 5V.

Application Circuit

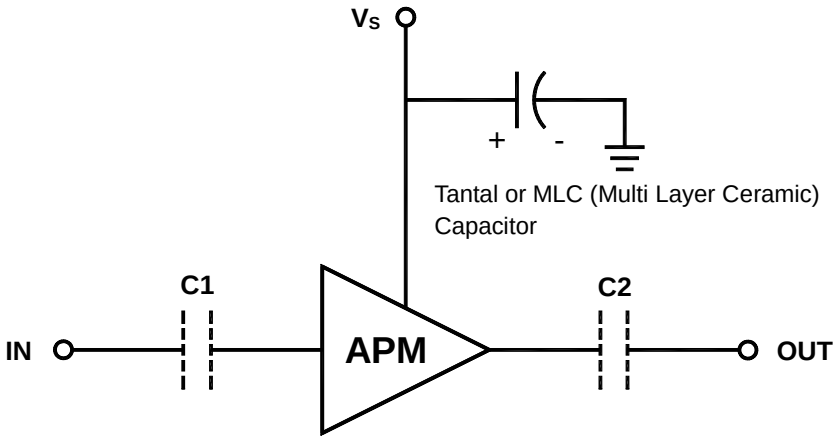

1) The tantal or MLC (Multi Layer Ceramic) capacitor is optional and for bypassing the AC noise introduced from the DC supply. The capacitance value may be determined by customer's DC supply status. The capacitor should be placed as close as possible to V_s pin and be connected directly to the ground plane for the best electrical performance.

2) DC blocking capacitors are always necessarily placed at the input and output port for allowing only the RF signal to pass and blocking the DC component in the signal. The DC blocking capacitors are included inside the APM module. Therefore, C1 & C2 capacitors may not be necessary, but can be added just in case that the customer wants. The value of C1 & C2 is determined by considering the application frequency.

Recommended Soldering Reflow Process

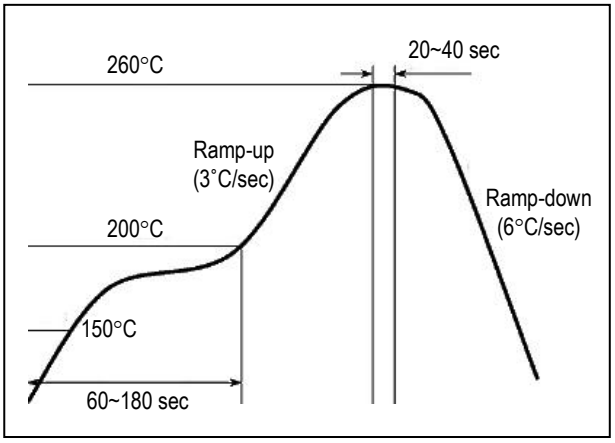

Evaluation Board Layout

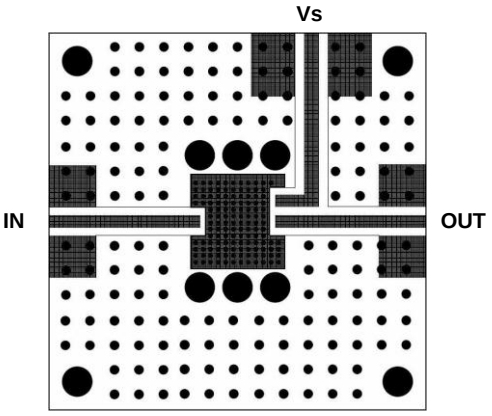

Size 40x40mm
(for APM Series – 10x10mm)

Channel Power vs. ACLR Test Configuration

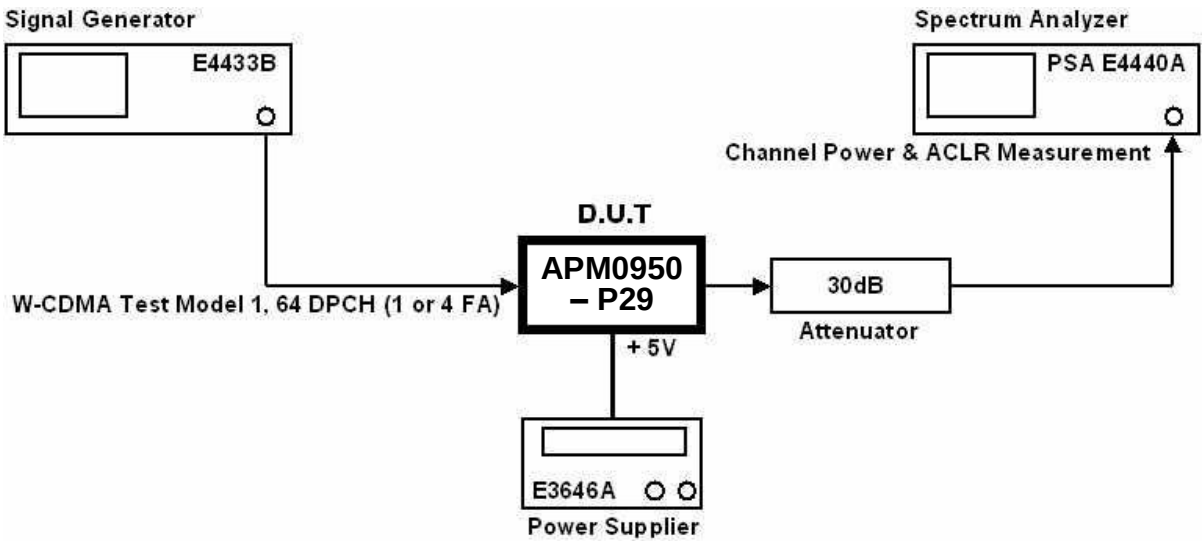

Evaluation Board attached with Heat Sink

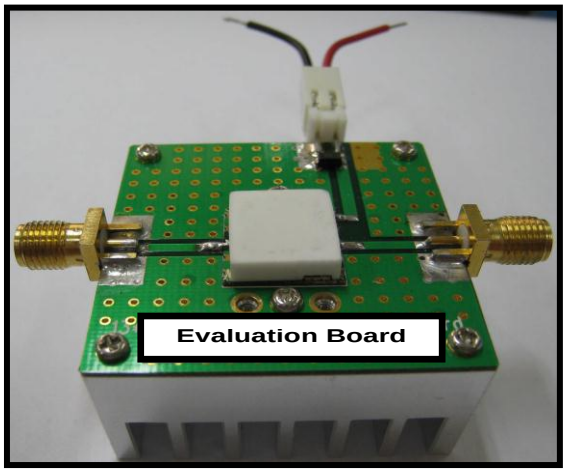

**** In order to prevent damage of D.U.T (APM-Series) from heating, you must to use a properly sized heat sink for testing a module.***