500mA Regulator + Reset IC

Features

- Low Quiescent Current : 120uA (No load)
- Low Dropout Voltage : 300mV (V_{OUT}=3.3V@ 500mA)
- Fixed Output Voltage : 1.3V,1.4V,1.5V,1.6V, 1.7V,1.8V,1.9V, 2.0V,2.1V,2.2V,2.3V,2.4V, 2.5V,2.6V,2.7V, 2.8V,2.9V,3.0V,3.1V,3.2V, 3.3V,3.4V.
- Stable with 4.7uF Output Capacitor
- Stable with Aluminum , Tantalum or Ceramic Capacitors .
- Reverse Current Protection
- No Protection Diodes Needed
- Built in Thermal Protection
- Built in Current Limit Protection
- Controlled Short Circuit Current : 50mA
- Fast transient Response
- Short Setting Time
- SOP-8,TSSOP-8 and MSOP-8 Packages.
- Adjustment-free Reset Detection Voltage : 3.9V or 4.2V typ.
- Easy to Set Delay Time from Voltage Detection to Reset Release.
- Reset and $\overline{\text{Reset}}$ output

Applications

- CD-ROM drive.

General Description

The APL5505/6/7 is micropower, low noise , low drop-out regulators with a reset function (regulator input (APL5505) or specific voltage(APL5506/7) monitoring), and internal delay circuit, set to detect 3.9V or 4.2V. Operate from 3V to 6V input voltage and deliver up to 500mA. Typical output noise is just 180uV_{RMS} with an external 0.01uF bypass capacitor connected in BP pin and the typical dropout voltage is only 300mV at 500mA loading. Design with an internal P-channel MOSFET pass transistor, the APL5505/6/7 maintains a low supply current, independent of the load current and dropout voltage. Other features include reverse current protection, thermal-shutdown protection, current limit protection to ensure specified output current and controlled short-circuit current. The APL5505/6/7 regulators come in miniature SOP-8, TSSOP-8 and MSOP-8 packages.

Pin Configuration

SOP-8 Top View

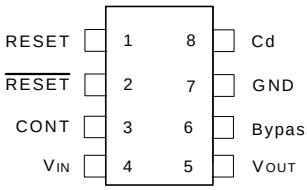

APL5505

SOP-8 Top View

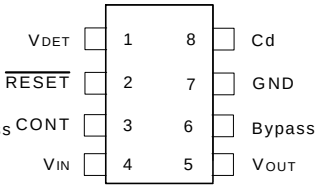

APL5506

SOP-8 Top View

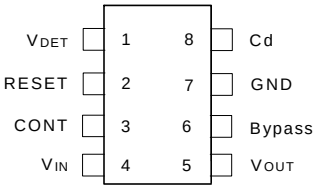

APL5507

ANPEC reserves the right to make changes to improve reliability or manufacturability without notice, and advise customers to obtain the latest version of relevant information to verify before placing orders.

Ordering and Marking Information

APL5505/6/7 -□□□□□-□□□

Lead Free Code
Handling Code
Temp. Range
Package Code
Voltage Code
Detection Voltage

Package Code
K : SOP-8 O : TSSOP-8
X : MSOP-8
Temp. Range
C : 0 to 70 °C I : -40 to 85 °C
Handling Code
TR : Tape & Reel
Voltage Code :
13 : 1.3V ~ 34 : 3.4V
Detection Voltage :
A : 3.9V B : 4.2V
Lead Free Code
L : Lead Free Device Blank : Original Device

APL5505/6/7 : APL5505/6/7X
XXXXX13

X - Detection Voltage
XXXXX - Date Code , 13 - 1.3V

Pin Description

PIN		I/O	Description
No.	Name		
1	RESET(5505)	O	Input voltage detection output pin , high = V_{IN}<VS , low = V_{IN}>VS
	V_{DET}(5506/7)	I	Input pin of voltage detection.
2	RESET(5507)	O	Input voltage detection output pin , high = V_{IN}<VS , low = V_{IN}>VS
	$\overline{\text{RESET}}$(5506)		Input voltage detection output pin , low = V_{IN}<VS , high = V_{IN}>VS
3	CONT	I	Output voltage on/off-control pin, low = off , high = on.
4	V_{IN}	O	Voltage supply input pin.
5	V_{OUT}	O	Regulator output pin.
6	Bypass		Bypass signal pin, connect a bypass capacitor to reduce output noise.
7	GND		GND pin
8	Cd		Delay time capacitor pin, RESET pin output delay time can be set by the capacitance connected to the Cd pin. tPLH = 160000*C, tPLH : transmission delay time (s), C:capacitor value (F)

Absolute Maximum Ratings

Symbol	Parameter	Rating	Unit
V_{IN}, V_{OUT}	Input Voltage or Out Voltage	6	V
CONT	Shutdown Control Pin	6	V
Vdet	RESET pin supply voltage	6	V
$R_{TH,JA}$	Thermal Resistance – Junction to Ambient	210	°C/W
P_D	Power Dissipation	Internally Limited	W
T_J	Operating Junction Temperature		°C
	Control Section	0 to 125	
	Power Transistor	0 to 150	
T_{STG}	Storage Temperature Range	-65 to +150	°C
T_L	Lead Temperature (Soldering, 10 second)	260	°C

Copyright © ANPEC Electronics Corp.

Electrical Characteristics

Unless otherwise noted these specifications apply over full temperature , V_{IN}=5V, C_{IN}=4.7uF,C_{OUT}=4.7uF, CONT=V_{IN}, T_J=0 to 125°C . Typical values refer to T_J=25°C .

Symbol	Parameter	Test Conditions	APL5505/6/7			Unit
			Min.	Typ.	Max.	
V_{IN}	Input Voltage		2.7		6	V
V_{OUT}	Output Voltage	V_{OUT}+1.0V< V_{CC}<6.0V, 0mA< I_{OUT} < I_{MAX}	V_{OUT} -2%	V_{OUT}	V_{OUT} +2%	V
I_{LIMIT}	Circuit Current Limit	V_{IN}=5V		700		mA
I_{SHORT}	Short Current	V_{OUT}=0V		50		mA
I_{OUT}	Load Current		500			mA
REG_{LINE}	Line Regulation	V_{OUT}+0.5V< V_{CC}<6.0V, 0mA< I_{OUT} < I_{MAX}		1	6	mV
REG_{LOAD}	Load Regulation	V_{IN} =5V, 0mA< I_{OUT} < I_{MAX}		1	6	mV
V_{DROP}	Dropout Voltage(Note) (VOUT(Nominal)=3.0V Version)	I_{OUT} =500mA		300	450	mV
PSRR	Ripple Rejection	F≤1kHz, 1Vpp at V_{IN} = V_{OUT}+1.0V	45	55		dB
I_Q	Quiescent Current	No load		120		µA
	Shutdown Supply Current	CONT = low I_{OUT}=0, V_{CC} =6.0V		80		µA
	Noise	100Hz<f<80kHz, typical load, C_{BP}=0.01µF		180		µV
	Shutdown Recovery Delay	C_{BP}=0.01µF,C_{OUT}=1µF, no load CONT=L→H		400		µs
OTS	Over Temperature			150		°C
	Over Temperature	Hysteresis		10		°C
TC	Output Voltage Temperature Coefficient			50		ppm/°C
C_{OUT}	Output Capacitor			4.7		µF
	ESR		0.02	0.1	1	Ohm
	Shutdown Input Threshold	V_{OUT}+1.0V< V_{IN} <6.0V		1.6		V
I_{CONT}	Shutdown input Bias current	V_{CONT} =V_{IN}		0.01	100	nA
	Reverse Protection Threshold			11	50	mV

Note: Dropout voltage definition : V_{IN}-V_{OUT} when V_{OUT} is 2% below the value of V_{OUT} for V_{IN} = V_{OUT} + 0.5V

Copyright © ANPEC Electronics Corp.

Electrical Characteristics (Cont.)

Unless otherwise noted these specifications apply over full temperature , V_{IN}=5V, C_{IN}=4.7uF,C_{OUT}=4.7uF, CONT=V_{IN}, T_J=0 to 125°C . Typical values refer to T_J=25°C .

Symbol	Parameter	Test Conditions	APL5505/6/7			Unit
			Min.	Typ.	Max.	
RESET/$\overline{\text{RESET}}$						
VS	Detection Voltage	V_{IN} = H→L (APL5505A) V_{DET}=H→L (APL5506A/5507A)		3.90		V
		V_{IN} = H→L (APL5505B) V_{DET}=H→L(APL5506B/5507B)		4.2		
△VS/△T	Vs Temperature Coefficient	T_J = -20~+80°C		100		ppm/°C
△VS	Hysteresis Voltage	V_{IN} = V_{DET} = H→L	100		200	mV
V_{OL}	Low-level Output Voltage	V_{IN} = V_{DET} = 3.9V, RL = 4.7k		30	60	mV
I_{OH}	Output Leakage Current	V_{IN} = V_{DET} = 5V		0.1		uA
I_{OL}1	Output Current1	V_{IN} = V_{DET} =3.9V, RL = 0	5			mA
I_{OL}2	Output Current2	V_{IN} = V_{DET} = 3.9V, RL = 0	3			mA
t_{PLH}	"H" Transmission Delay Time	Cd = 0uF		40	90	us
t_{PLH1}	Reset Delay Time	V_{IN} = V_{DET} = 3.7V→5V, Cd = 0.1uF		16		ms
t_{PHL}	"L" Transmission Delay Time	Cd = 0uF		10	90	us
V_{OPL}	Threshold Operating Voltage	V_{OL} = 0.4V		0.9	1.1	V

Copyright © ANPEC Electronics Corp.

Application Circuit

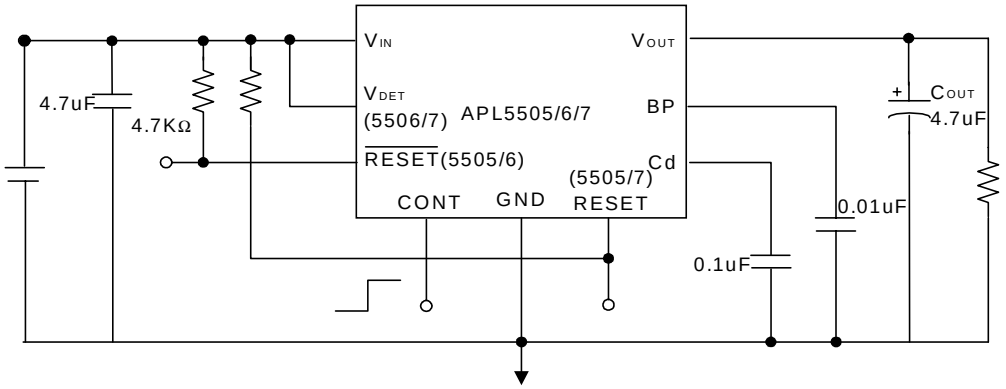

Typical Characteristics

Current Limit vs. Input Voltage

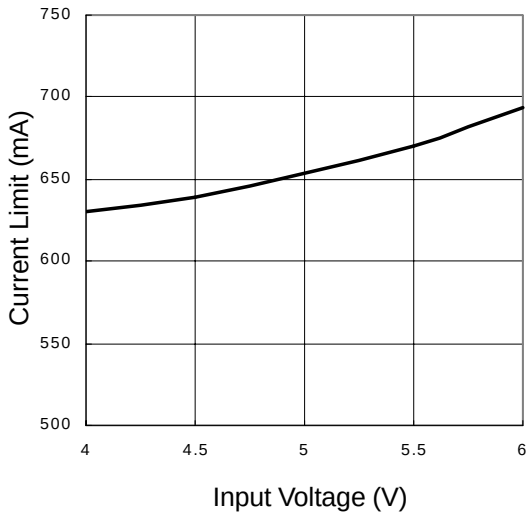

Ground Pin Current vs. Load Current

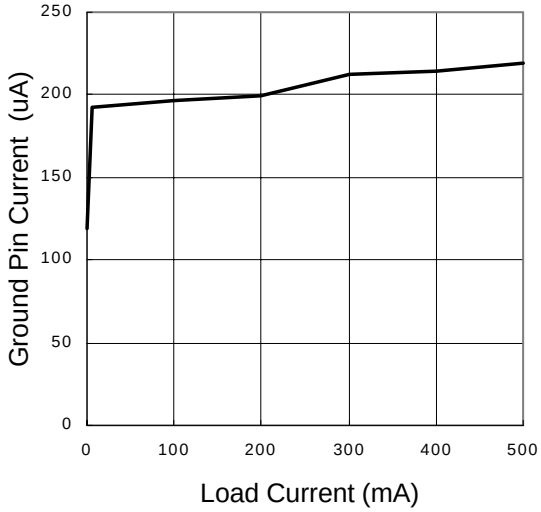

Ground Pin Current vs. Input Voltage

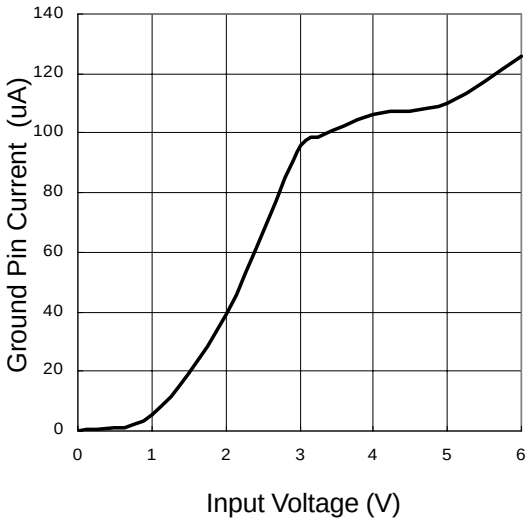

Input Voltage vs. Output Voltage

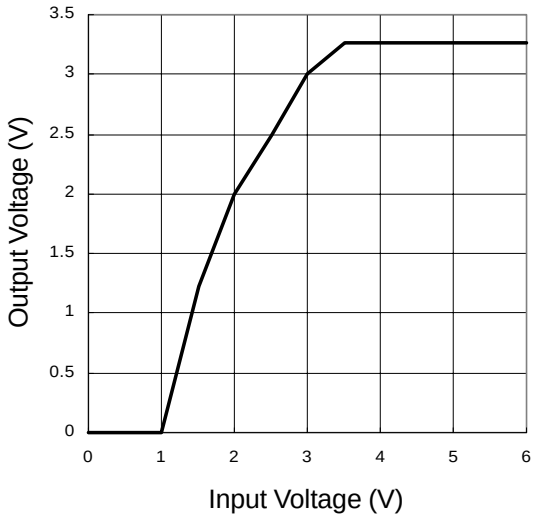

Copyright © ANPEC Electronics Corp.

Typical Characteristics

Dropout Voltage vs. Load Current

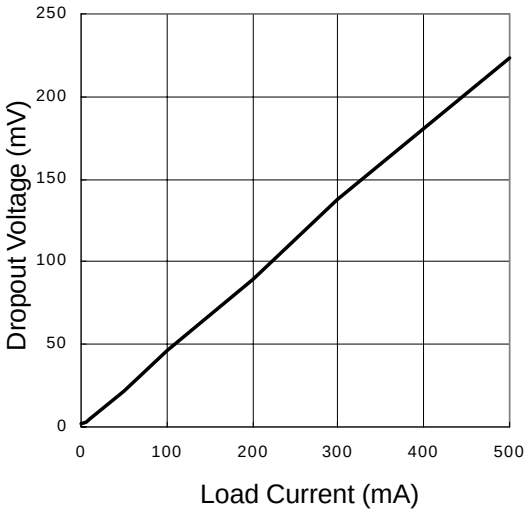

Reverse Leakage Current vs. Output Voltage

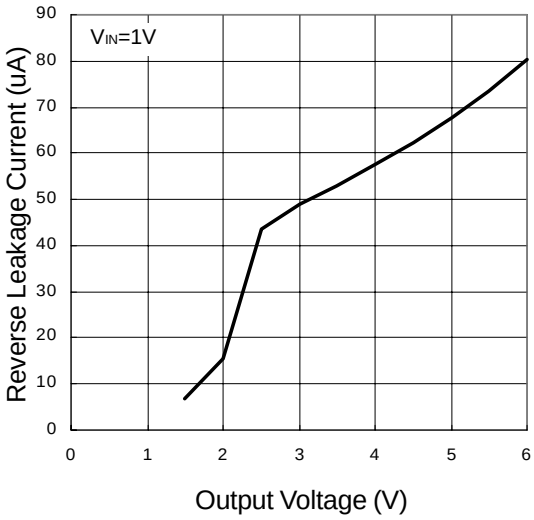

PSRR vs. Frequency

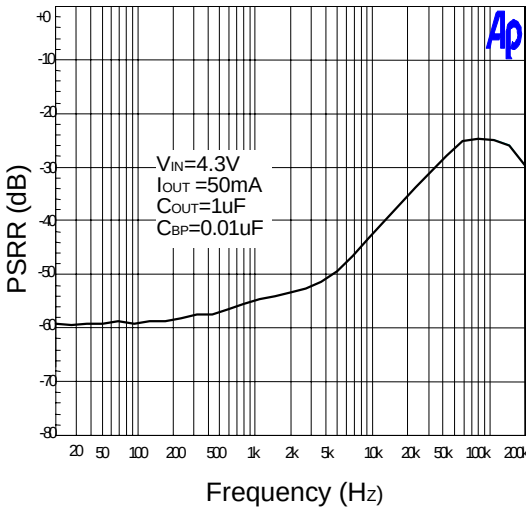

Output Noise

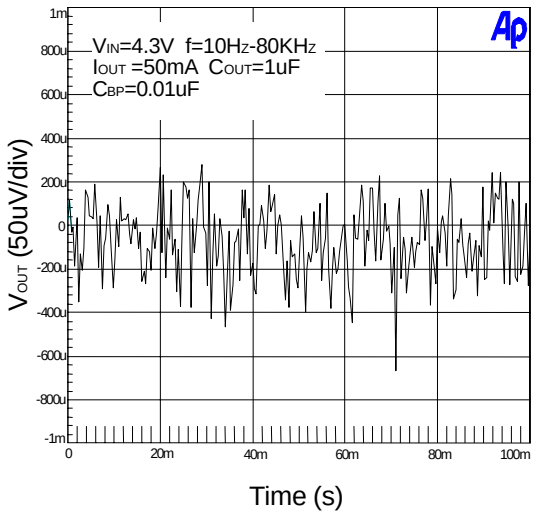

Typical Characteristics

RESET and $\overline{\text{RESET}}$ Delay Time

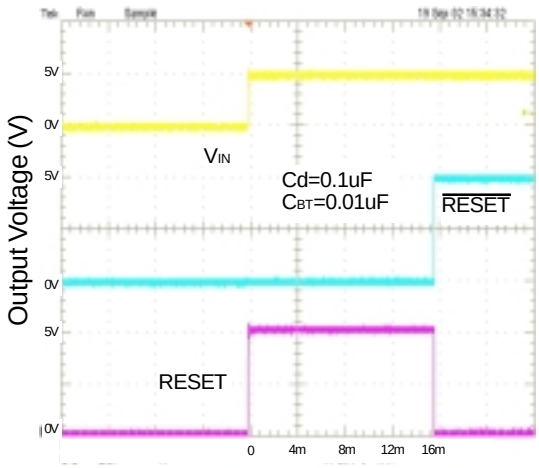

Shutdown Recovery Delay

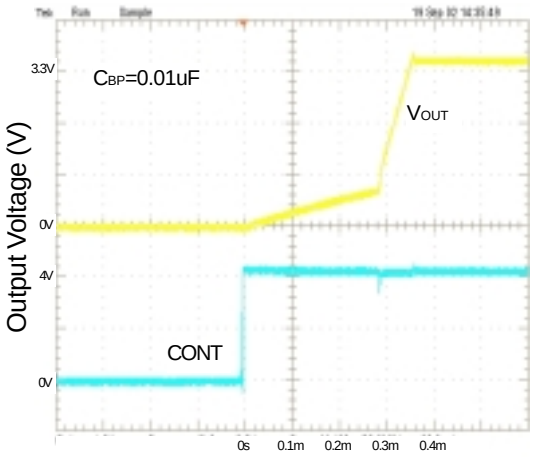

Load-Transient Response

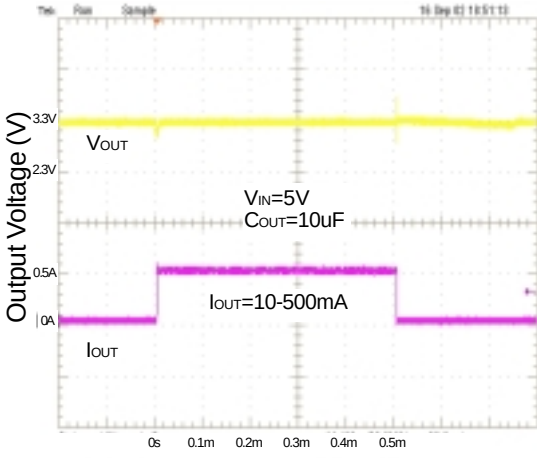

Line-Transient Response

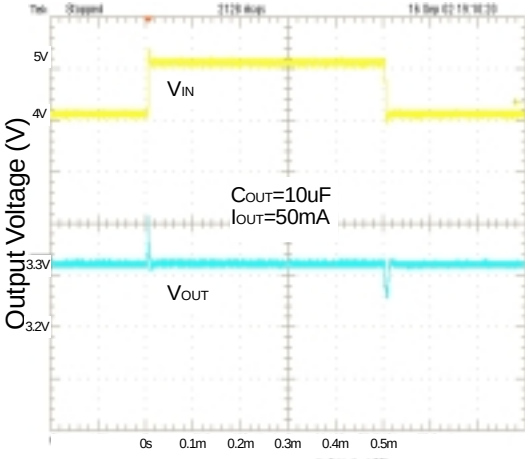

Copyright © ANPEC Electronics Corp.

Typical Characteristics

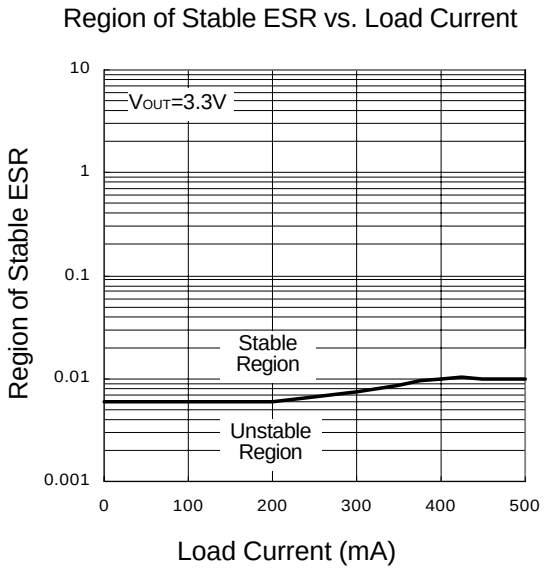

Packaging Information

SOP-8 pin (Reference JEDEC Registration MS-012)

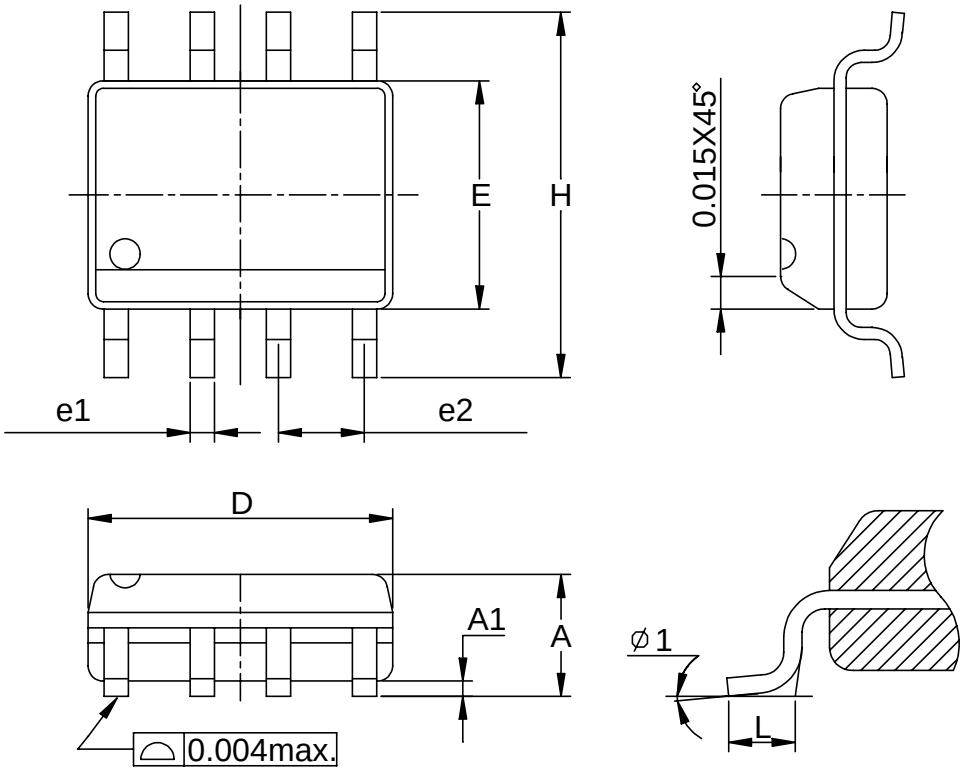

Dim	Millimeters		Inches	
	Min.	Max.	Min.	Max.
A	1.35	1.75	0.053	0.069
A1	0.10	0.25	0.004	0.010
D	4.80	5.00	0.189	0.197
E	3.80	4.00	0.150	0.157
H	5.80	6.20	0.228	0.244
L	0.40	1.27	0.016	0.050
e1	0.33	0.51	0.013	0.020
e2	1.27BSC		0.50BSC	
ϕ 1	8°		8°	

Packaging Information

TSSOP

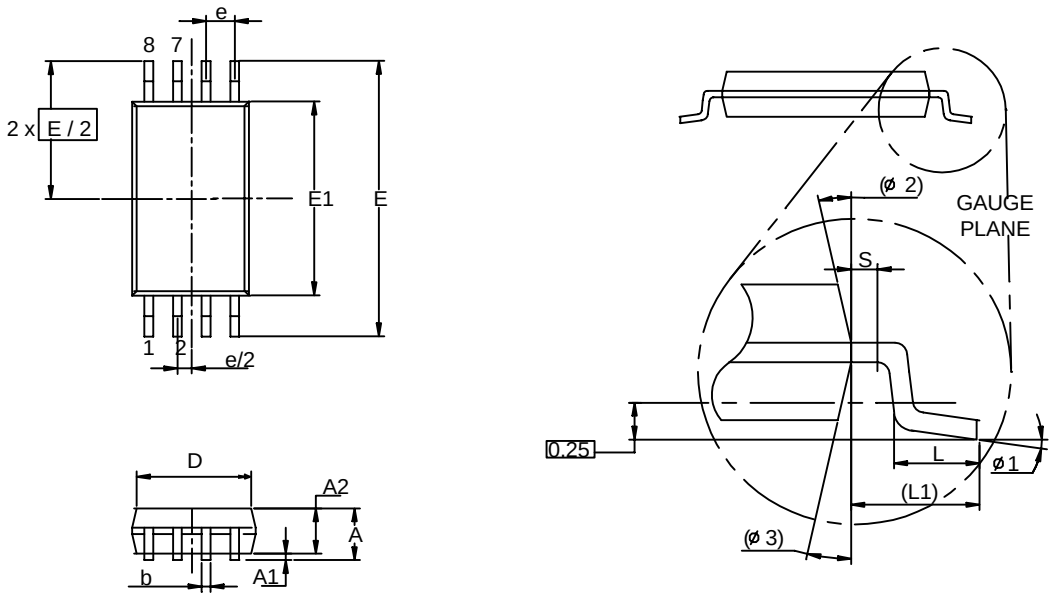

Dim	Millimeters		Inches	
	Min.	Max.	Min.	Max.
A		1.2		0.047
A1	0.00	0.15	0.000	0.006
A2	0.80	1.05	0.031	0.041
b	0.19	0.30	0.007	0.012
D	2.9	3.1	0.114	0.122
e	0.65 BSC		0.026 BSC	
E	6.40 BSC		0.252 BSC	
E1	4.30	4.50	0.169	0.177
L	0.45	0.75	0.018	0.030
L1	1.0 REF		0.039REF	
R	0.09		0.004	
R1	0.09		0.004	
S	0.2		0.008	
ϕ1	0°	8°	0°	8°
ϕ2	12° REF		12° REF	
ϕ3	12° REF		12° REF	

Packaging Information

MSOP

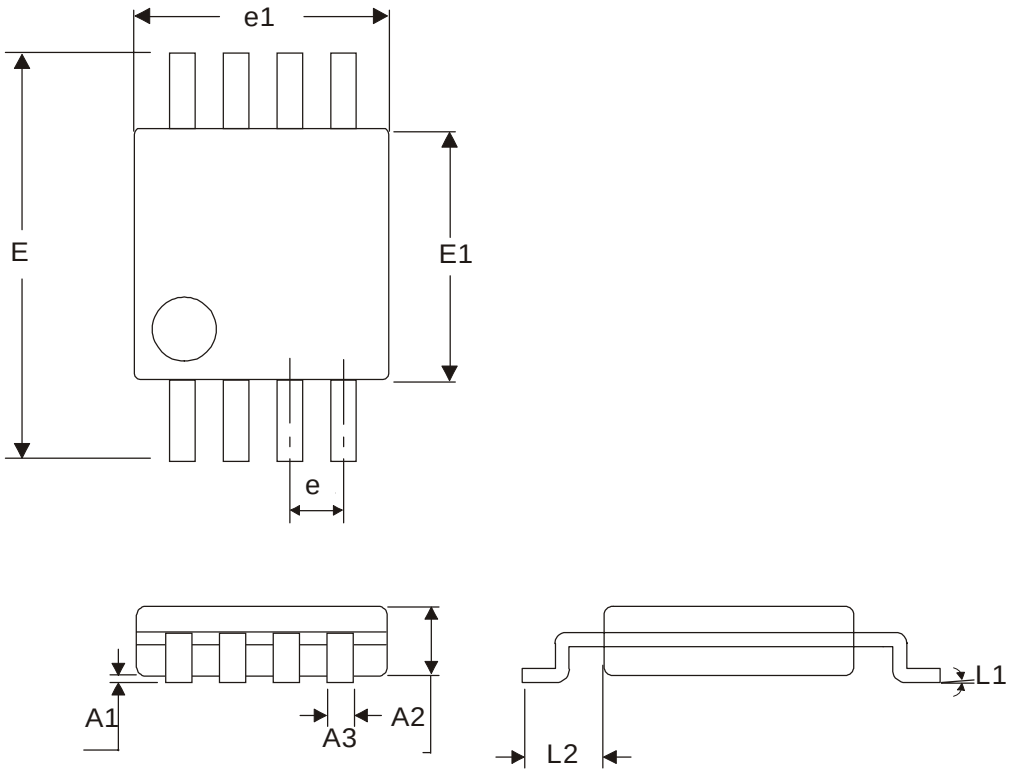

Dim	Millimeters		Inches	
	Min.	Max.	Min.	Max.
A1	0.06	0.15	0.002	0.006
A2	0.86 TYP		0.34 TYP	
A3	0.25	0.4	0.01	0.0126
e	0.65 TYP		0.0256TYP	
e1	2.90	3.1	0.114	0.124
E	4.8	5.0	0.189	0.197
E1	2.90	3.1	0.169	0.177
L1	0.25 REF		0.039REF	
L2	0.0375 REF		0.953 REF	

Copyright © ANPEC Electronics Corp.

Physical Specifications

Terminal Material	Solder-Plated Copper (Solder Material : 90/10 or 63/37 SnPb), 100%Sn
Lead Solderability	Meets EIA Specification RSI86-91, ANSI/J-STD-002 Category 3.

Reflow Condition (IR/Convection or VPR Reflow)

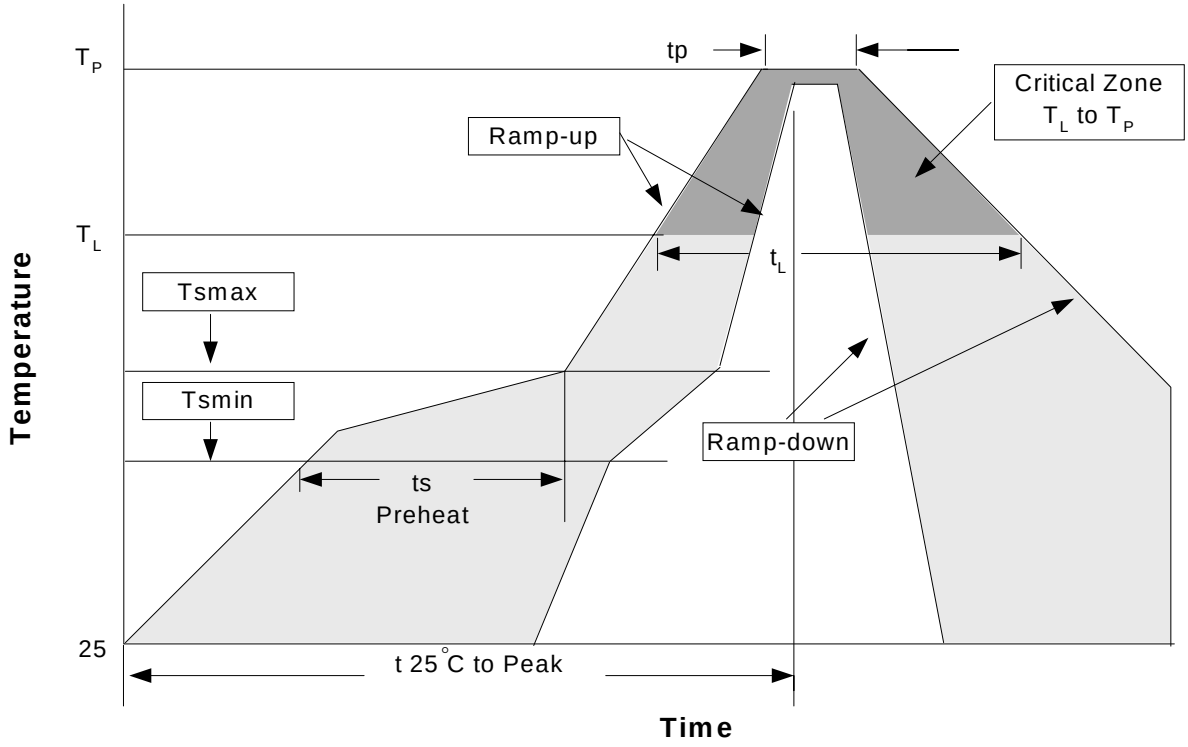

Classificatin Reflow Profiles

Profile Feature	Sn-Pb Eutectic Assembly		Pb-Free Assembly	
	Large Body	Small Body	Large Body	Small Body
Average ramp-up rate (T_L to T_P)	3°C/second max.		3°C/second max.	
Preheat - Temperature Min (Tsmin) - Temperature Mix (Tsmax) - Time (min to max)(ts)	100°C 150°C 60-120 seconds		150°C 200°C 60-180 seconds	
Tsmax to T_L - Ramp-up Rate			3°C/second max	
Tsmax to T_L - Temperature(T_L) - Time (t_L)	183°C 60-150 seconds		217°C 60-150 seconds	
Peak Temperature(Tp)	225 +0/-5°C	240 +0/-5°C	245 +0/-5°C	250 +0/-5°C
Time within 5°C of actual Peak Temperature(tp)	10-30 seconds	10-30 seconds	10-30 seconds	20-40 seconds
Ramp-down Rate	6°C/second max.		6°C/second max.	
Time 25°C to Peak Temperature	6 minutes max.		8 minutes max.	

Note: All temperatures refer to topside of the package. Measured on the body surface.

Copyright © ANPEC Electronics Corp.

Reliability test program

Test item	Method	Description
SOLDERABILITY	MIL-STD-883D-2003	245°C , 5 SEC
HOLT	MIL-STD-883D-1005.7	1000 Hrs Bias @ 125 °C
PCT	JESD-22-B, A102	168 Hrs, 100 % RH , 121°C
TST	MIL-STD-883D-1011.9	-65°C ~ 150°C, 200 Cycles
ESD	MIL-STD-883D-3015.7	VHBM > 2KV, VMM > 200V
Latch-Up	JESD 78	10ms , I_{tr} > 100mA

Carrier Tape

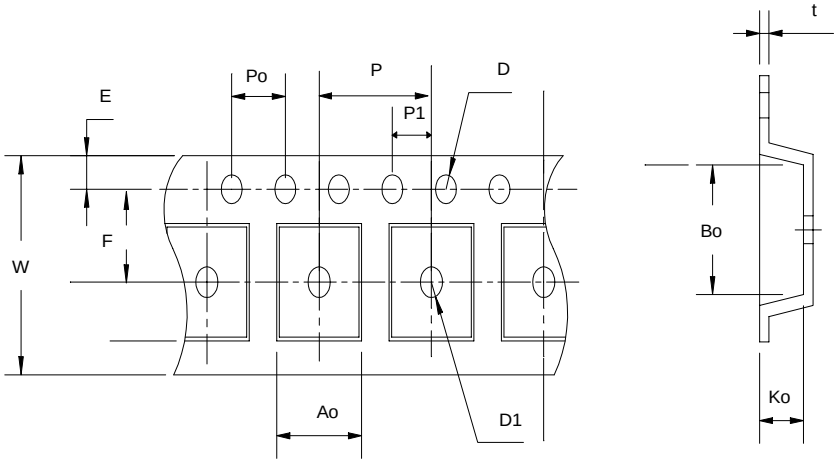

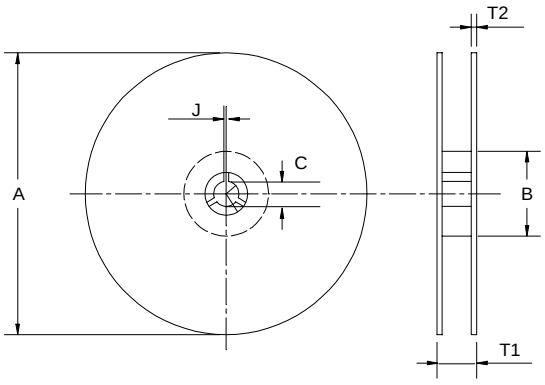

Reel Dimensions

Application	A	B	C	J	T1	T2	W	P	E
SOP- 8	330 ± 1	62 +1.5	12.75+ 0.15	2 ± 0.5	12.4 ± 0.2	2 ± 0.2	12± 0. 3	8± 0.1	1.75±0.1
	F	D	D1	Po	P1	Ao	Bo	Ko	t
	5.5± 1	1.55 +0.1	1.55+ 0.25	4.0 ± 0.1	2.0 ± 0.1	6.4 ± 0.1	5.2± 0. 1	2.1± 0.1	0.3±0.013
Application	A	B	C	J	T1	T2	W	P	E
TSSOP-8	330 ± 1	62 +1.5	12.75+ 0.15	2 + 0.5	12.4 ± 0.2	2 ± 0.2	12± 0. 3	8± 0.1	1.75±0.1
	F	D	D1	Po	P1	Ao	Bo	Ko	t
	5.5 ± 0. 1	1.5 + 0.1	1.5 + 0.1	4.0 ± 0.1	2.0 ± 0.1	7.0 ± 0.1	3.6 ± 0.3	1.6 ± 0.1	0.3±0.013

(mm)

Cover Tape Dimensions

Application	Carrier Width	Cover Tape Width	Devices Per Reel
SOP- 8	12	9.3	2500
TSSOP- 8	12	9.3	2500

Customer Service

Anpec Electronics Corp.
Head Office :
5F, No. 2 Li-Hsin Road, SBIP,
Hsin-Chu, Taiwan, R.O.C.
Tel : 886-3-5642000
Fax : 886-3-5642050

Taipei Branch :
7F, No. 137, Lane 235, Pac Chiao Rd.,
Hsin Tien City, Taipei Hsien, Taiwan, R. O. C.
Tel : 886-2-89191368
Fax : 886-2-89191369