Kingbright

2.8X1.0mm RIGHT ANGLE SMD CHIP LED LAMP

APKA2810SEC SUPER BRIGHT ORANGE

Features

- 2.8mmX1.0mm RIGHT ANGLE SMT LED, 1.2mm THICKNESS.
- LOW POWER CONSUMPTION.
- IDEAL FOR BACKLIGHT AND INDICATOR.
- VARIOUS COLORS AND LENS TYPES AVAILABLE.
- PACKAGE : 2000PCS / REEL.
- RoHS COMPLIANT.

Description

The Super Bright Orange device is made with DH InGaAlP (on GaAs substrate) light emitting diode chip.

Package Dimensions

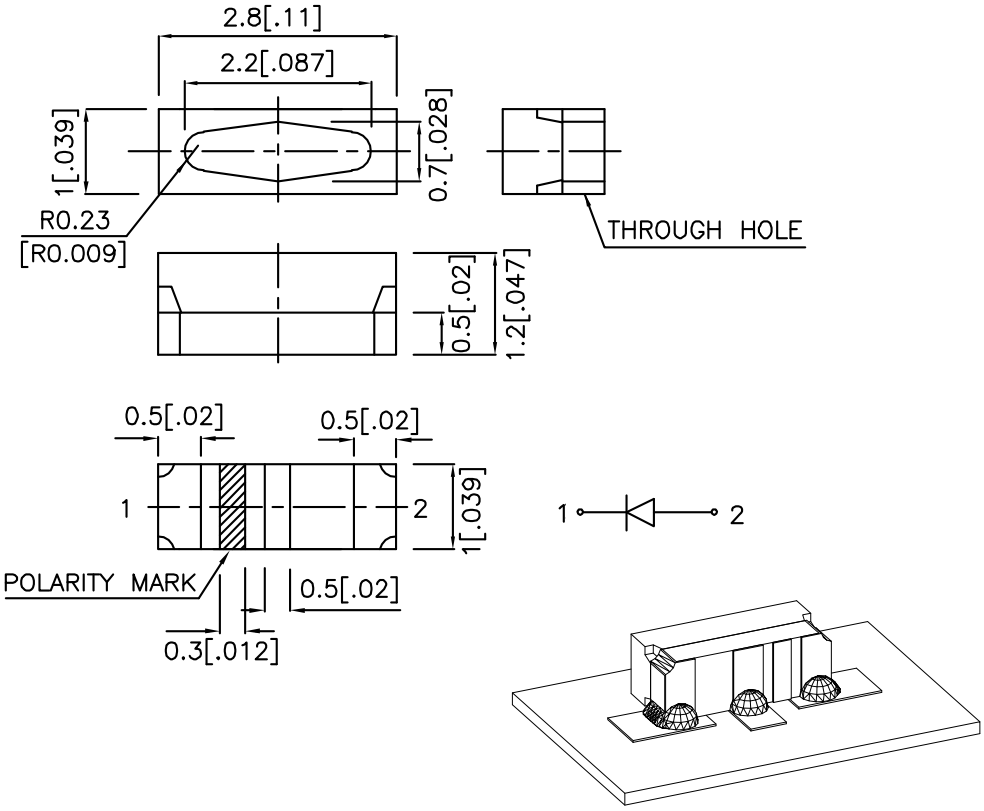

Notes:
1. All dimensions are in millimeters (inches).
2. Tolerance is ±0.25(±0.01") unless otherwise noted.
3. Specifications are subject to change without notice.

Kingbright

Selection Guide

Part No.	Dice	Lens Type	Iv (mcd) @ 20mA		Viewing Angle
			Min.	Typ.	2θ1/2
APKA2810SEC	SUPER BRIGHT ORANGE (InGaAlP)	WATER CLEAR	110	300	90°

Note:
1. θ1/2 is the angle from optical centerline where the luminous intensity is 1/2 the optical centerline value.

Electrical / Optical Characteristics at T_A=25°C

Symbol	Parameter	Device	Typ.	Max.	Units	Test Conditions
λpeak	Peak Wavelength	Super Bright Orange	610		nm	I_F=20mA
λD	Dominant Wavelength	Super Bright Orange	601		nm	I_F=20mA
Δλ1/2	Spectral Line Half-width	Super Bright Orange	29		nm	I_F=20mA
C	Capacitance	Super Bright Orange	30		pF	V_F=0V;f=1MHz
V_F	Forward Voltage	Super Bright Orange	2.0	2.5	V	I_F=20mA
I_R	Reverse Current	Super Bright Orange		10	uA	V_R= 5V

Absolute Maximum Ratings at T_A=25°C

Parameter	Super Bright Orange	Units
Power dissipation	75	mW
DC Forward Current	30	mA
Peak Forward Current [1]	195	mA
Reverse Voltage	5	V
Operating / Storage Temperature	-40°C To +85°C	

Note:
1. 1/10 Duty Cycle, 0.1ms Pulse Width.

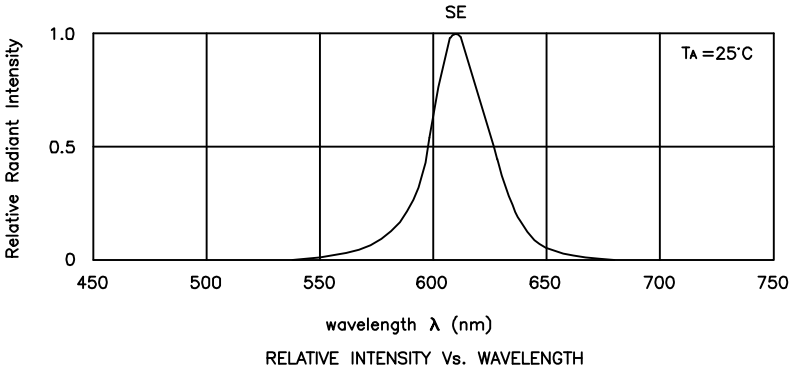

RELATIVE INTENSITY Vs. WAVELENGTH

Super Bright Orange **APKA2810SEC**

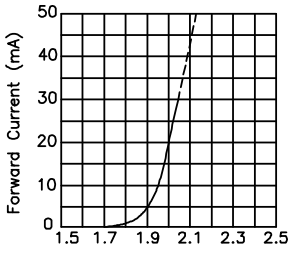

FORWARD CURRENT Vs.
FORWARD VOLTAGE

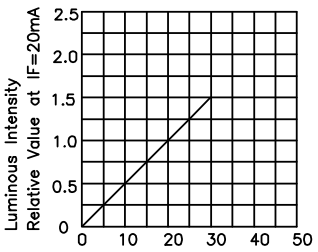

LUMINOUS INTENSITY Vs.
FORWARD CURRENT

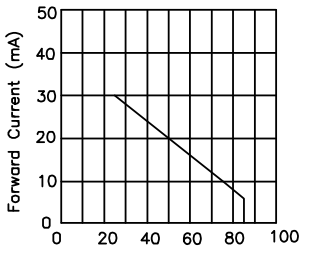

FORWARD CURRENT
DERATING CURVE

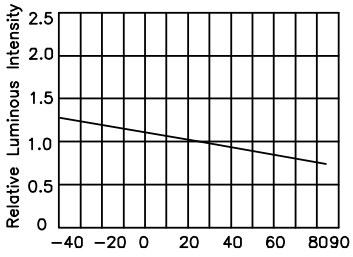

LUMINOUS INTENSITY Vs.
AMBIENT TEMPERATURE

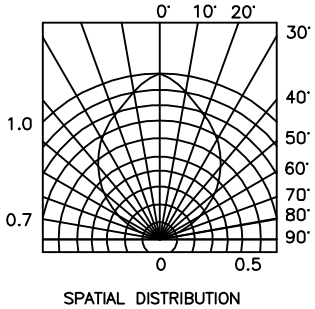

SPATIAL DISTRIBUTION

APKA2810SEC

Reflow Soldering Profile For Lead-free SMT Process.

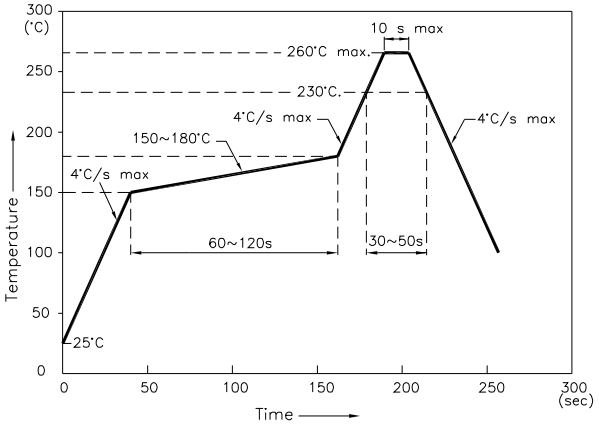

NOTES:

1. We recommend the reflow temperature 245°C(+/-5°C).The maximum soldering temperature should be limited to 260°C.
2. Don't cause stress to the epoxy resin while it is exposed to high temperature.
3. Number of reflow process shall be 2 times or less.

Recommended Soldering Pattern
(Units : mm)

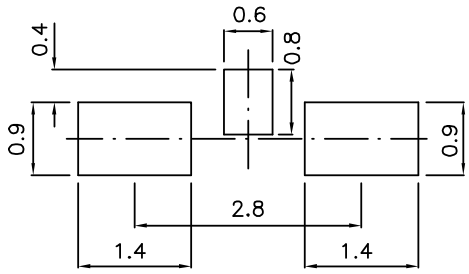

Tape Specifications
(Units : mm)

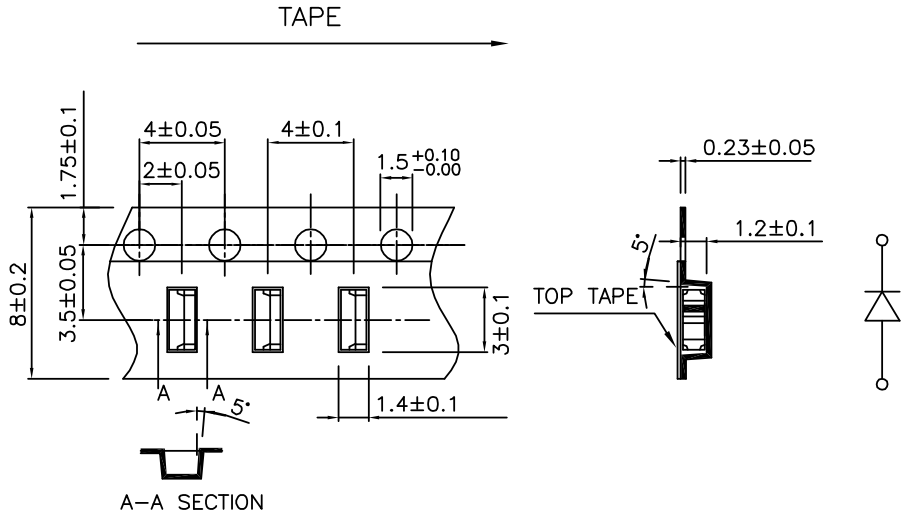

Kingbright

PACKING & LABEL SPECIFICATIONS **APKA2810SEC**

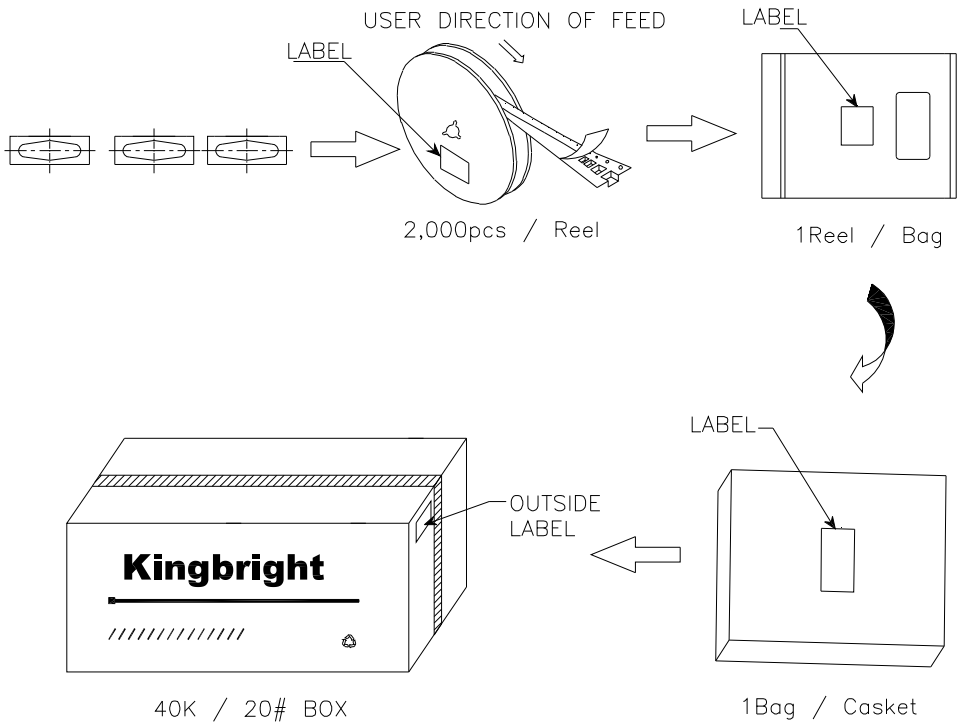

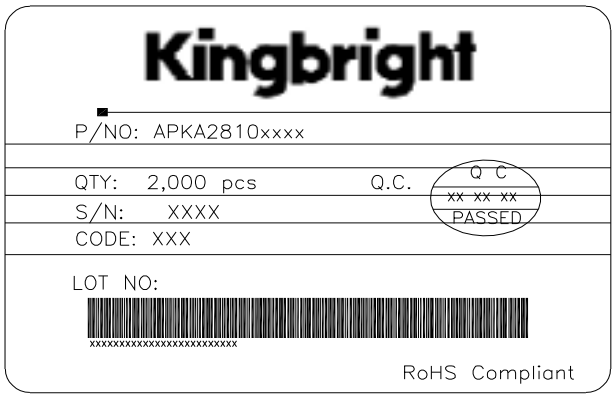

Remarks:

If special sorting is required (e.g. binning based on forward voltage, luminous intensity, or wavelength),

the typical accuracy of the sorting process is as follows:

1. Wavelength: +/-1nm
2. Luminous Intensity: +/-15%
3. Forward Voltage: +/-0.1V

Note: Accuracy may depend on the sorting parameters.