White LED Driver (120mA Charge Pump with Current Source)

❖ GENERAL DESCRIPTION

The APE1601 is a high efficiency charge pump white LED driver. It supports up to 4 white LEDs with regulated constant current for uniform intensity. The APE1601 maintains the highest efficiency by utilizing a x1/x1.5/x2 fractional charge pump and low dropout current regulators.

User can easily configure each LED current up 30mA by an external resistor. Two digital inputs can be programmable to control white LED On/Off. LED dimming can be achieved by applying a PWM signal to the digital control signals. The operating voltage range is 2.5V to 5.5V. Internal soft-start circuitry effectively reduces the in-rush current both while start-up and mode change. APE1601 also provides comprehensive protections such short circuit protection and over-temperature protection. The load is disconnected from VIN while shutdown and the shutdown current is less than 1uA. APE1601 is available in a QFN 3x3mm-16L package.

❖ FEATURES

- Very High Efficiency Over 90% of Battery Life
- Support up to 4 WLEDs
- Support up to 120mA Output Current
- Soft Start / Short Circuit Protection Function
- Three Charge Pump Mode: x1, x1.5, x2
- 250k/1MHz Fixed Frequency Oscillator
- RoHS Compliant and 100% Lead (Pb)-Free

❖ Block Diagram

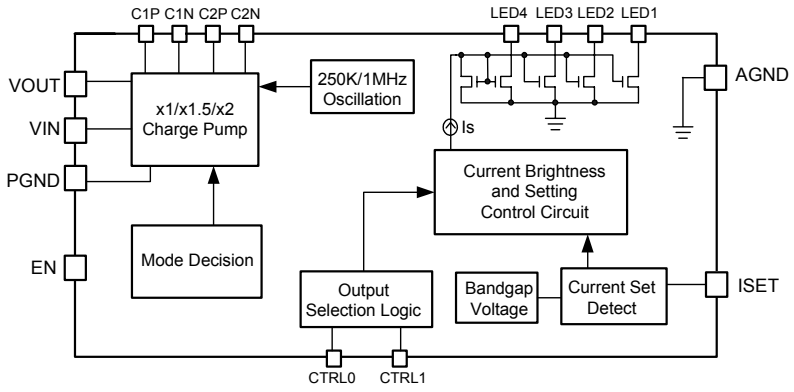

This datasheet contains new product information. Advanced Power Electronics Corp. reserves the rights to modify the product specification without notice. No liability is assumed as a result of the use of this product. No rights under any patent accompany the sale of the product.

White LED Driver (120mA Charge Pump with Current Source)

❖ PIN ASSIGNMET (QFN 3x3mm -16L)

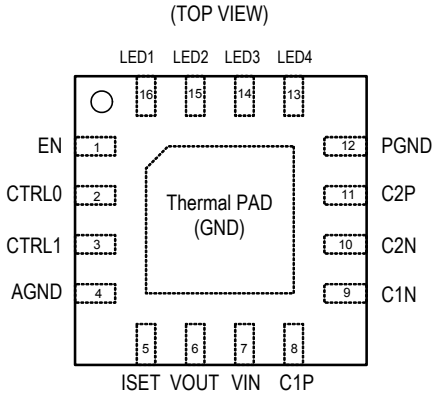

Table 1

Control Inputs		Output Status			
CTRL1	CTRL0	LED4	LED3	LED2	LED1
0	0	OFF	OFF	ON	ON
0	1	OFF	ON	ON	ON
1	0	ON	ON	ON	ON
1	1	OFF	OFF	OFF	OFF

PIN	Name	Description
1	EN	Chip Enable (Active High). There should be a pull low 100kΩ resistor connected to GND when the control signal is floating.
2	CTRL0	Output Control Bit 0. (See Table 1)
3	CTRL1	Output Control Bit 1. (See Table 1)
4	AGND	Analog Ground
5	ISET	LED current is set by the value of the resistor R_{SET} connected from the ISET pin to ground. Do not short the ISET pin. V_{ISET} is typically 1.2V. All external capacitance at this pin, including board parasitic capacitance, must be less than or equal to 30pF.
6	VOUT	Output Voltage Source for connection to the LED anodes.
7	VIN	Input Voltage
8	C1P	Positive Terminal of Bucket Capacitor 1
9	C1N	Negative Terminal of Bucket Capacitor 1
10	C2N	Negative Terminal of Bucket Capacitor 2
11	C2P	Positive Terminal of Bucket Capacitor 2
12	PGND	Power Ground.
13 to 16	LED4~1	Current Sink for LED. (If not in use, pin should be connected to V_{OUT}) (1)
PAD	GND	Exposed pad should be soldered to PCB board and connected to GND.

(1) The CTRL word must match the output in use.

❖ ORDER/MARKING INFORMATION

Order Information	Top Marking
APE1601X X Frequency: Blank : 1.0Mhz, A : 250Khz Package Type: VN3: QFN 3X3-16L	Part number → 1601 X Blank : APE1601 A : APE1601A X X X X X → ID code : internal WW : 01~52 Year : 06 = 2006

White LED Driver (120mA Charge Pump with Current Source)

❖ Absolute Maximum Ratings (at Ta=25℃)

Characteristics	Symbol	Rating	Unit
VIN Pin Voltage	V_{IN}	- 0.3 to 6V	V
VOUT Pin Voltage	V_{OUT}	- 0.3 to 6V	V
Storage Temperature Range	T_{ST}	-65 to +150	℃
Junction Temperature	T_J	+125	℃
Thermal Resistance from Junction to ambient	θ_{JA}	68	℃/W
Power Dissipation[PD=(T_J-T_A) / θ_{JA}]	PD	1.47	W

Note : θ_{JA} is measured with the PCB copper area of approximately 1 in^2(Multi-layer).

❖ Operating conditions

Characteristics	Symbol	Rating	Unit
Operating Temperature Range	T_{OP}	-40 to +85	℃
Operating Supply Voltage	V_{OP}	+2.5 to +5.5	V

❖ Electrical Characteristics (V_{IN} = 3.7V, C1=C2=1uF,ESR =0.03Ω,Ta=25°C, unless otherwise specified)

Characteristics	Symbol	Conditions	Min	Typ	Max	Units
Undervoltage Lockout Threshold		V_{IN} rising or falling	1.8	2.1	2.4	V
Undervoltage Lockout Hysteresis				50		mV
Current into LEDs 1, 2, 3 and 4	I_{LED}	R_{SET} = 24.0K	--	20	--	mA
		R_{SET} = 96.0K	--	5	--	mA
		2.7V < V_{IN} < 5.5V	2	--	20	mA
		3.1V < V_{IN} < 5.5V	2	--	30	mA
Quiescent Current	I_{CCQ}	F_{OSC} =1MHz, EN = High, No Load	--	3	--	mA
		F_{OSC} =250kHz, EN = High, No Load	--	1.5	--	mA
Shutdown Supply Current	I_{SD}	EN = Low	--	1	7	uA
I_{LED} Accuracy	$I_{LED-ERR}$	2mA < I_{LED} < 30mA	--	2	7.5	%
Current Matching	$I_{LED-LED-ERR}$	2mA < I_{LED} < 30mA	--	1	5	%
x1 mode to x1.5 mode Transition Voltage (VIN falling)	$V_{TRANS1X}$	V_{LED}= 3.6V, I_{OUT}= 80mA I_{LED1} = I_{LED2} = I_{LED3} = I_{LED4} = 20mA	--	3.8	--	V
x1.5 mode to x2 mode Transition Voltage (VIN falling)	$V_{TRANS1.5X}$	V_{LED}= 3.6V, I_{OUT}= 80mA I_{LED1} = I_{LED2} = I_{LED3} = I_{LED4} = 20mA	--	2.8	--	V
Oscillator Frequency	F_{OSC}	APE1601	0.8	1.0	1.2	MHz
	F_{OSC}	APE1601A	200	250	300	KHz
Input current limit	I_{LIM}	Short circuit applied from V_{OUT} to GND	450	--	850	mA
Output over voltage protect	V_{OVP}	Open circuit at any LED that is programmed to be in the ON state	--	5.5	6	V
EN Pin Logic input threshold voltage	V_{IH}	Input high (EN,CTRL0,CTRL1)	2.0	--	--	V
	V_{IL}	Input low (EN,CTRL0,CTRL1)	--	--	0.8	

EN Pin Input Current	I_{IH}	$V_{EN}=V_{IN}$ (ON)	--	--	1	uA
	I_{IL}	V_{EN}=GND (OFF)	--	--	1	uA
Thermal shutdown Temp	TSD			150		℃
Thermal shutdown Hysteresis				15		℃

Note 1. I_{LED} Accuracy $= \pm \frac{I_{LED(MEASURED)} - I_{LED(SET)}}{I_{LED(SET)}} X100\%$

Note 2. Current Matching refers to the difference in current from on LED to the next.

$$I_{LED} \text{ Current Matching} = \pm \frac{I_{LED(MAX)} - I_{LED(MIN)}}{I_{LED(MAX)} + I_{LED(MIN)}} X100\%$$

❖ Application Circuit

A. For 4 WLEDs back light

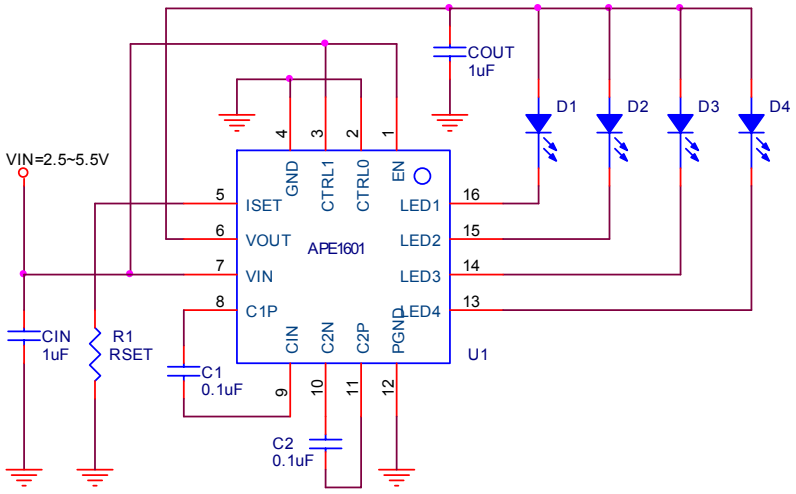

B. For 3 WLEDs back light

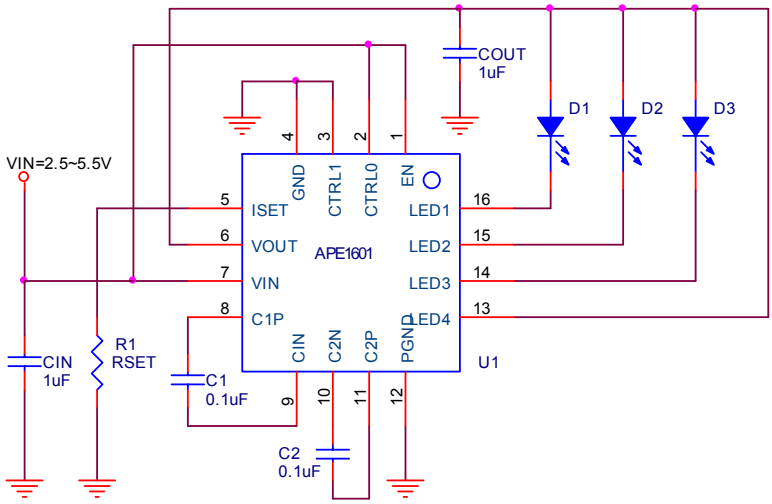

White LED Driver (120mA Charge Pump with Current Source)

C. For 2 WLEDs back light

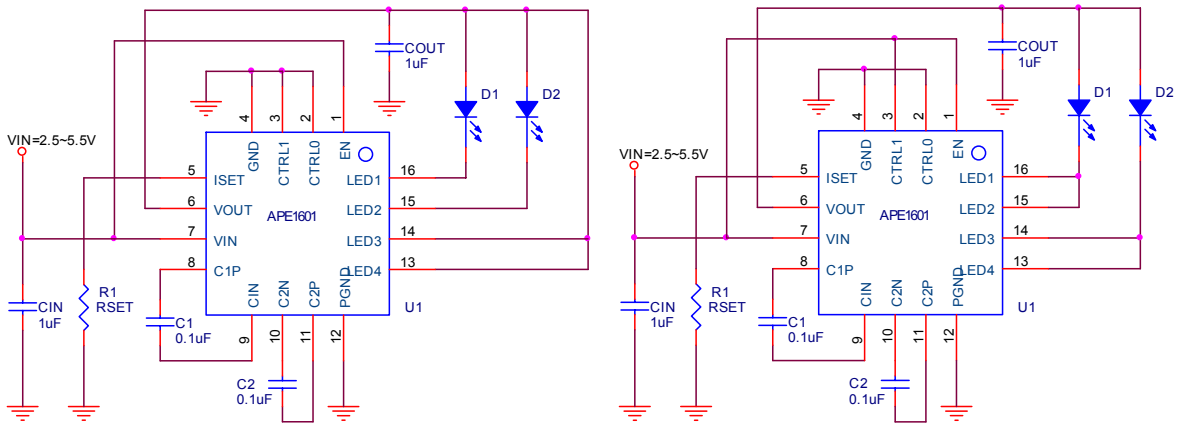

D. For 3 WLEDs Camera flash module

GPIO2:
High : VDD (Movie Mode)
Low : 0V (Strobe Mode)

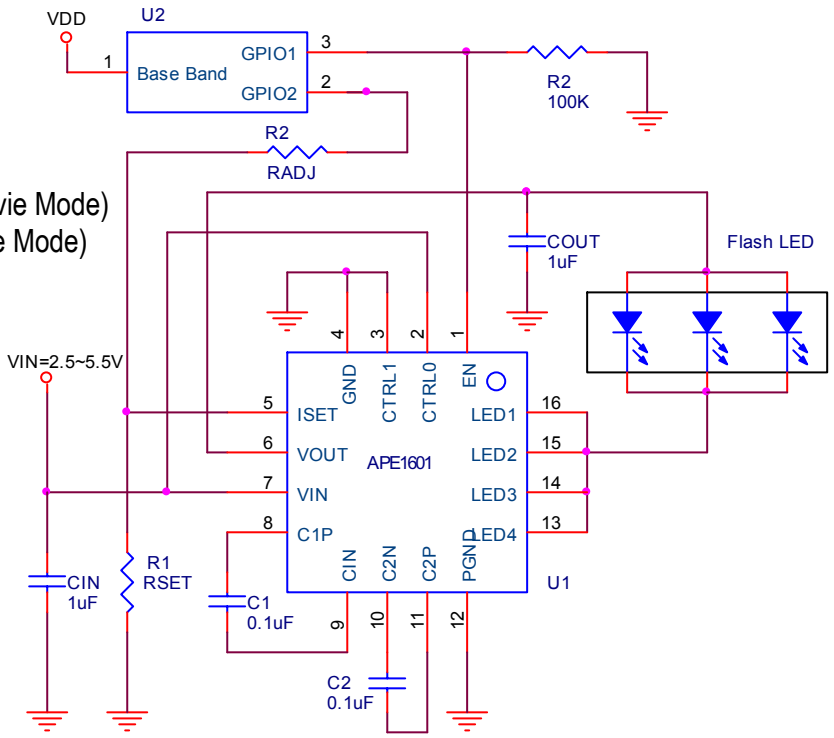

DEVICE	C1 (uF)	C2 (uF)
APE1601(1MHz)	0.1	0.1
APE1601A(250KHz)	0.47	0.47

❖ Function Descriptions

The APE1601/A is a high efficiency charge pump white LED driver. It provides 4 channels low drop-out voltage current source to regulated 4 white LEDs current. For high efficiency, the APE1601/A implements x1/x1.5/x2 mode charge pump. An external R_{SET} is used to set the current of white LED. APE1601/A has an input current regulation to reduce the input ripple.

Soft Start

The APE1601/A includes a soft start circuit to limit the inrush current at power on and mode switching. Soft start circuit holds the input current level long enough for output capacitor C_{OUT} reaching a desired voltage level.

Mode Decision

The APE1601/A uses a smart mode decision method to select the working mode for maximum efficiency. Mode decision circuit senses the output and LED voltage for up/down selection.

Dimming Control

CTRL0 and CTRL1 are used to control the on/off of White LED. When an external PWM signal is connected to the control pin, brightness of white LED is adjusted by the duty cycle.

LED Current Setting

The current of white LED connected to APE1601/A can be set by R_{SET}. Every current flows through the white LED is 400 times greater than the current of R_{SET}. The white LED can be estimated by following equation:

$$I_{LED} = 400 \times \left(\frac{V_{ISET}}{R_{SET}} \right)$$

where V_{ISET} = 1.2V, and R_{SET} is the resistance connected from I_{SET} to GND.

Thermal Shutdown

The APE1601/A provides a high current capability to drive 4 white LEDs. A thermal shutdown circuit is needed to protect the chip from thermal damage. When the chip reaches the shutdown temperature 150°C, the thermal shutdown circuit turns off the chip to prevent the thermal accumulation in the chip.

Over Voltage Protection

The APE1601/A regulates the output voltage by controlling the input current. When the output voltage reaches the designated level, the APE1601/A reduces the input current. And then, the output voltage regulation also serves an over-voltage protection.

Short Circuit Protection

A current limiting circuit is also included in the APE1601/A for short circuit protection. Whenever output source a dangerously high current, the current limiting circuit takes over the output regulation circuit and reduces the output current at an acceptable level.

❖ Application Information

Selecting Capacitors

To get the better performance of APE1601/A, the selecting of peripherally appropriate capacitor and value is very important. These capacitors determine some parameters such as input and output ripple, power efficiency, maximum supply current by charge pump, and start-up time. To reduce the input and output ripple effectively, the low ESR ceramic capacitors are recommended. Generally, to reduce the output ripple, increasing the output capacitance C_{OUT} is necessary. However, this will increase the start-up time of output voltage. For LED driver applications, the input voltage ripple is more important than output ripple. Input ripple is controlled by input capacitor C_{IN}, increasing the value of input capacitance can further reduce the ripple. Practically, the input voltage ripple depends on the power supply's impedance. If a single input capacitor C_{IN} cannot satisfy the requirement of application, it is necessary to add a low-pass filter as shows in Figure 1.

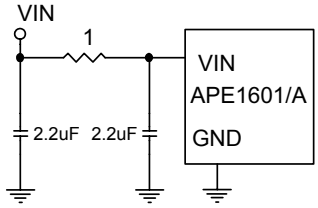

Frgure1. C-R-C filter used to reduce input ripple

The flying capacitor C1 and C2 determine the supply current capability of the charge pump and to influence the overall efficiency of system. The lower value will improve efficiency, but it will limit the LED' s current at low input voltage.

Setting the LED Current

The APE1601/A can be set a fixed LEDs current by a resister RSET connected from ISET to GND. RSET establishes the reference current and mirrors the current into LED1, LED2, LED3, and LED4. The current into LED is about 400 times of the current flows through the RSET, the approximate setting formula is given as follows:

$$I_{LED}(A) = 400 \times \left(\frac{1.2V}{R_{SET}} \right) \qquad (1)$$

Figure 2 shows the typical value of RSET versus average LED current and Table 2 shows the values of RSET for a fixed LED current.

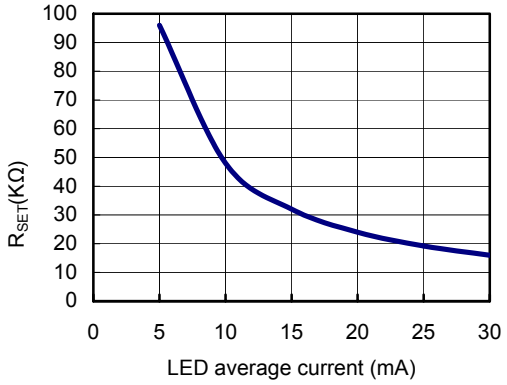

Figure 2. The typical curve of RSET vs. LED's average current.

Table 2. R_{SET} Value Selection

I_{LED}(mA)	R_{SET}(KΩ)
5	96.0
10	48.0
15	32.0
20	24.0
25	19.2
30	16.0

If maximum accuracy is required, a precision resister is needed. Equation (2) shows how to calculate the error $I_{LED(ERR)}$.

$$I_{LED(ERR)} = \pm \left| \frac{I_{LED(MEASURED)} - I_{LED(SET)}}{I_{LED(SET)}} \right| X100\% \qquad (2)$$

Where $I_{LED(MEASURED)}$ is practical LED current $I_{LED(SET)}$ is LED current which is determined by the R_{SET}.

LED current setting with NMOS

LED current setting control can also be achieved by using the external NMOS to change equivalent resister of ISET pin. Figure 3 shows this application circuit of method. For this example, a 3 bit signals can set 8 kinds of different equivalent resister of ISET pin, i.e. produce 8 kinds of LED current level. Table 3 shows the relation between equivalent resister of ISET pin and control signal.

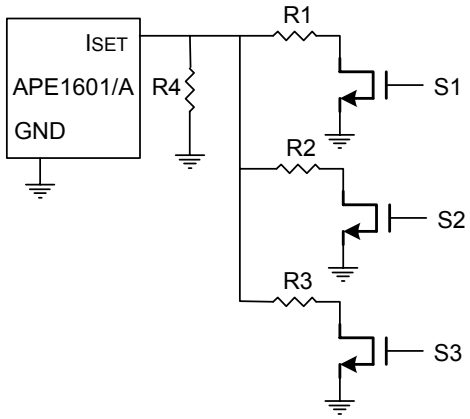

Figure 3. The application circuit of setting LED current which uses a NMOS to set R_{SET}.

Table 3. The relation between control signal and equivalent resister of I_{SET} pin

S1	S2	S3	Equivalent Resister of I_{SET} pin(R_{SET})
0	0	0	R_{SET} =R4
0	0	1	R_{SET} =R3//R4
0	1	0	R_{SET} =R2//R4
0	1	1	R_{SET} =R2//R3//R4
1	0	0	R_{SET} =R1//R4
1	0	1	R_{SET} =R1//R3//R4
1	1	0	R_{SET} =R1//R2//R4
1	1	1	R_{SET} =R1//R2//R3//R4

LED Dimming Control Methods

The APE1601/A can use two methods to achieve the LED dimming control. These methods are detailed described as following:

(1). Dimming using PWM signal into CTRL0 and CTRL1

LED current can be controlled by applying a PWM signal to CTRL0 or CTRL1. Table 4 shows the relation between CTRLx and 4 LED's current states. For an example, as the CTRL1 is pulled logical high and CTRL0 receives a PWM signal, then, four LEDs will be dimmed synchronously. Here, the PWM signal setting the LED's current ON/OFF can achieve the average LED's current which in design. The application circuit is shown in Figure 4. Figure 5, and Figure 6 show 3WEDs and 2WLEDs PWM dimming application circuit, respectively. During the time of PWM signal logical low, the current is a fixed value and setting by RSET resistor. So the average LEDs current can be approximated as Equation (3).

$$I_{LED(AVG)} = \left(\frac{T_{OFF} \times I_{LED(ON)}}{T_{PWM}} \right) \quad (3)$$

Where:

T_{PWM} is the period of PWM dimming signal T_{OFF} is the time of PWM signal at low. $I_{LED(ON)}$ is LED on state current.

Table 4. The relation between CTRLx and 4 LED's current states

Control Inputs		Output Status			
CTRL1	CTRL0	LED4	LED3	LED2	LED1
0	0	OFF	OFF	ON	ON
0	1	OFF	ON	ON	ON
1	0	ON	ON	ON	ON
1	1	OFF	OFF	OFF	OFF

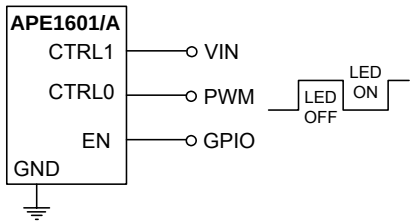

Figure 4. The PWM dimming application circuit for 4WLEDs

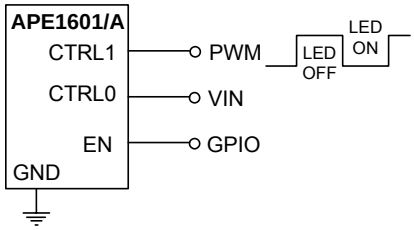

Figure 5. The PWM dimming application circuit for 3WLEDs

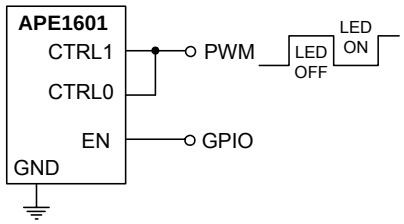

Figure 6. The PWM dimming application circuit for 2WLEDs

Besides, APE1601/A has 100us delay time between mode transfer. This delay time makes different dimming frequency corresponds to different maximum duty of CTRLX pin. When the duty cycle of dimming frequency excess maximum duty, the APE1601/As can't transfer the mode normally. Equation (4) shows the relation between maximum duty of CTRLX pin and PWM dimming frequency. Table 5 is shown the common dimming frequency and its corresponding maximum duty. For better performance consideration, the maximum PWM dimming frequency is recommended below 1 kHz.

$$D_{(MAX)} = (1 - 100x10^{-6} \times F_D) \quad (4)$$

Where: D_{MAX} is Maximum Duty of CTRLX

F_D is PWM Dimming Frequency

Table 5. The common dimming frequency and its corresponding maximum duty.

Dimming Frequency (Hz)	CTRLX Maximum Duty	ILED Minimum Duty
1K	0.90	0.10
900	0.91	0.09
800	0.92	0.08
700	0.93	0.07
600	0.94	0.06
500	0.95	0.05
400	0.96	0.04
300	0.97	0.03
200	0.98	0.02

PCB Board Layout

The APE1601/A is a high-frequency switched-capacitor converter. For best performance, place all of the components as close to IC as possible. Besides a solid ground plane is recommended on the bottom layer of the PCB. The ground should be connected CIN and COUT together and as close to the IC as possible. Figure 7 shows the typical layout of APE1601/A' s EVB board.

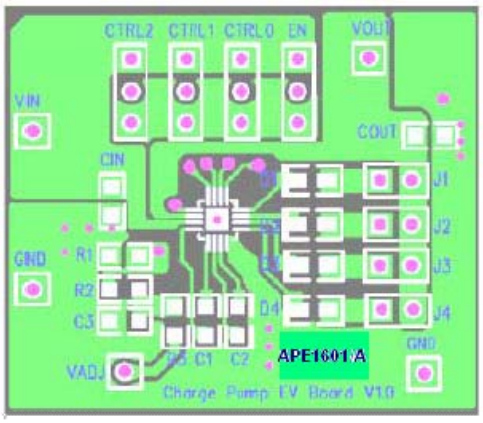

Top Layer

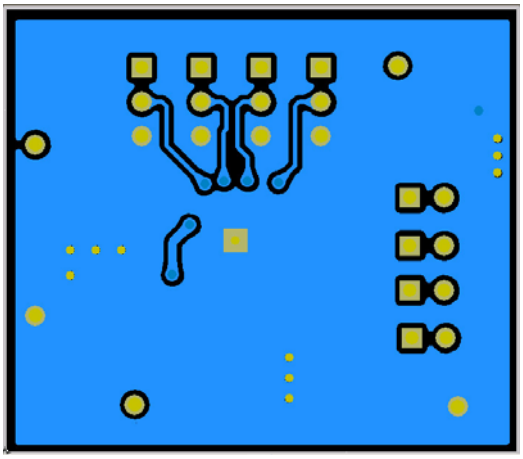

Bottom Layer

Figure 7. Typical layout of A**PE1601**/A's EVB board

Package Outline : QFN 3x3-16L

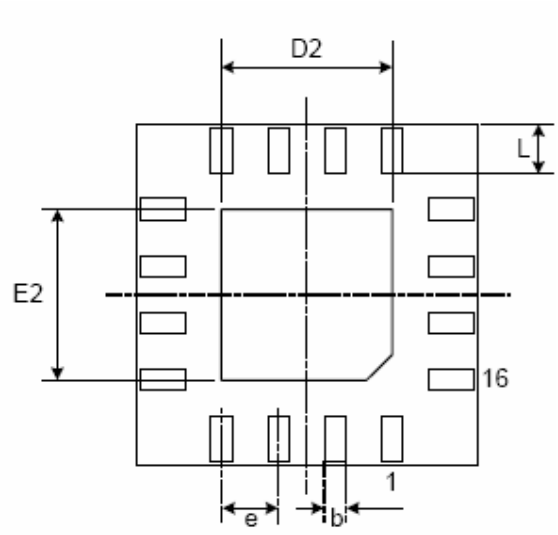

SYMBOLS	Millimeters		
	MIN	NOM	MAX
A	0.750	0.850	0.950
A1	0.000	0.020	0.050
A2	0.175	0.200	0.250
b	0.180	0.230	0.300
D	2.950	3.000	3.050
D2	1.450	1.600	1.750
E	2.950	3.000	3.050
E2	1.450	1.600	1.750
e	0.500		
L	0.350	0.400	0.450
y	0.080		

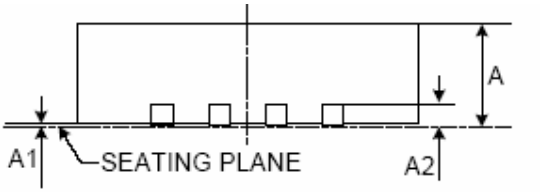

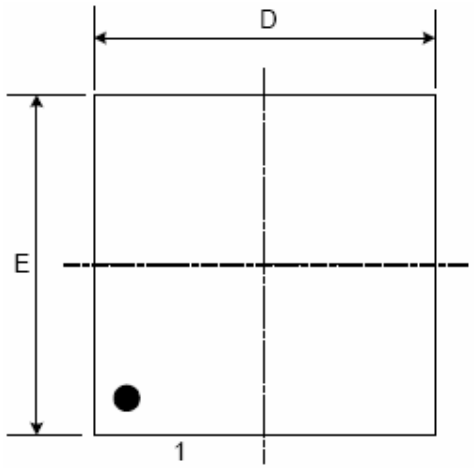

1.All Dimension Are In Millimeters.

2.Dimension Does Not Include Mold Protrusions.

Part Marking Information & Packing : QFN 3x3-16L

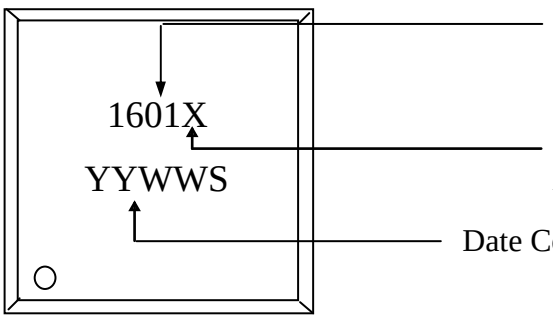

Part Number

Blank : 1MHz
A : 250KHz

Date Code (YYWWS)

YY：Last Digit Of The Year
WW：Week
S：Sequence