1.5MHz, 600mA Synchronous Step-Down Converter

❖ FEATURES

- 2.5V to 5.5V Input Voltage Range
- High Efficiency: Up to 96%
- 1.5MHz Constant Frequency Operation
- 600mA Output Current at VCC=3V
- No Schottky Diode Required
- Low Dropout Operation: 100% Duty Cycle
- 0.6V Reference Allows Low Output Voltages
- Current Mode Operation for Excellent Line and Load Transient Response
- Current limit, Enable function
- Short Circuit Protect (SCP)
- Low Quiescent Current: 300μA
- ≤ 1μA Shutdown Current
- 5-pin, SOT-23 Pb-Free package

❖ GENERAL DESCRIPTION

The APE1501 is a high efficiency monolithic synchronous buck regulator using a 1.5MHz constant frequency, current mode architecture. The device is available in an adjustable version. Supply current with no load is 300μA and drops to <1μA in shutdown. The 2.5V to 5.5V input voltage range makes the APE1501 ideally suited for single Li-Ion battery-powered applications. 100% duty cycle provides low dropout operation,

Switching frequency is internally set at 1.5MHz, allowing the use of small surface mount inductors and capacitors. The internal synchronous switch increases efficiency and eliminates the need for an external Schottky diode. Low output voltages are easily supported with the 0.6V feedback reference voltage. The APE1501 can supply 600mA of load current at VCC=3V. The APE1501 is available in a low profile 5-pin, SOT package.

This datasheet contains new product information. Advanced Power Electronics Corp. reserves the rights to modify the product specification without notice. No liability is assumed as a result of the use of this product. No rights under any patent accompany the sale of the product.

1.5MHz, 600mA Synchronous Step-Down Converter

❖ Block Diagram

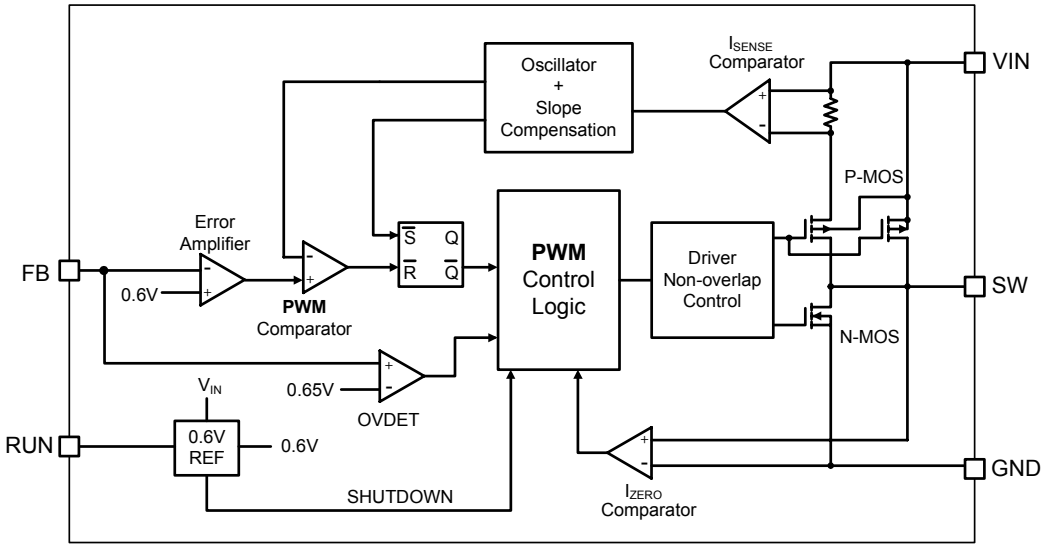

❖ PIN ASSIGNMENT

The package of APE1501 is SOT-23-5L; the pin assignment is given by:

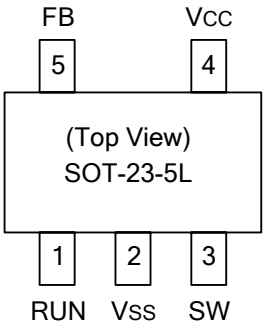

Name	Description
RUN	Power-off pin H：normal operation L：Step-down operation stopped (All circuits deactivated)
V_{SS}	Ground pin
SW	Switch output pin. Connect external inductor here. Minimize trace area at this pin to reduce EMI.
V_{CC}	IC power supply pin
FB	Output Feedback pin

❖ ORDER/MARKING INFORMATION

Order Information	Top Marking
APE1501 XX Package Type Y5: SOT-23-5L	**G1YW** W : 01~26(A~Z) 27~52($\overline{A}$~$\overline{Z}$) Year : 6 = 2006 A = 2010 Part number : APE1501

❖ Absolute Maximum Ratings (at T_A=25℃)

Characteristics	Symbol	Rating	Unit
VCC Pin Voltage	V_{CC}	V_{SS} - 0.3 to V_{SS} + 6	V
Feedback Pin Voltage	V_{FB}	V_{SS} - 0.3 to V_{CC} + 0.3	V
RUN Pin Voltage	V_{RUN}	V_{SS} - 0.3 to V_{CC} + 0.3	V
Switch Pin Voltage	V_{SW}	V_{SS} - 0.3 to V_{CC} + 0.3	V
Peak SW Sink & Source Current	I_{PSW}	1.5	A
Operating Supply Voltage	V_{OP}	+2.5 to +5.5	V
Power Dissipation	PD	(T_J-T_A) / θ_{JA}	mW
Storage Temperature Range	T_{ST}	-40 to +150	℃
Operating Temperature Range	T_{OP}	-40 to +85	℃
Junction Temperature	T_J	+125	℃
Thermal Resistance from Junction to case	θ_{JC}	110	℃/W
Thermal Resistance from Junction to ambient	θ_{JA}	250	℃/W

Note1 : θ_{JA} is measured with the PCB copper area of approximately 1 in²(Multi-layer). that need connect to V_{SS} pin of the APE1501.

❖ Electrical Characteristics (V_{IN} = V_{RUN}=3.6V, T_A =25℃, unless otherwise specified)

Characteristics	Symbol	Conditions	Min	Typ	Max	Units
Feedback Voltage	V_{FB}	T_A =25℃,I_{OUT}=50mA	0.5880	0.6000	0.6120	V
Quiescent Current	I_{CCQ}	V_{FB}=0.5V		270	400	uA
Feedback Bias Current	I_{FB}	V_{FB}=0.65V	-	-	±30	nA
Shutdown Supply Current	I_{SD}	V_{RUN} =0V	-	0.08	1	uA
Maximum Output Current	$I_{OUT(MAX)}$	V_{CC} =3V	0.6			A
Current Limit	I_{LIMIT}	V_{CC} =3V	0.85	1.2	-	A
Line Regulation	$\triangle V_{OUT}/V_{OUT}$	V_{CC} = 2.5V~5.5V	-	0.5	1	%
Load Regulation	$\triangle V_{OUT}/V_{OUT}$	I_{OUT} = 0.01 to 0.6A	-	0.4	0.6	%
Oscillation Frequency	F_{OSC}	SW pin	1.2	1.5	1.8	MHz
Frequency of SCP	F_{OSC1}	SW pin	-	300	-	KHz
$R_{DS(ON)}$ of P-CH MOSFET	R_{DSON}	I_{SW} = 300mA		0.30	0.50	Ω
$R_{DS(ON)}$ of N-CH MOSFET	R_{DSON}	I_{SW} = -300mA		0.20	0.45	Ω
Efficiency	EFFI	V_{OUT}=1.8V,I_{OUT}=0.5A		89		%
RUN Threshold	V_{RUN}		0.3	0.45	1.3	V
RUN Pin Input Current	I_{RUN}		-	±0.1	±1	uA

Note2: 100% production test at +25°C. Specifications over the temperature range are guaranteed by design and characterization.

❖ Application Circuit

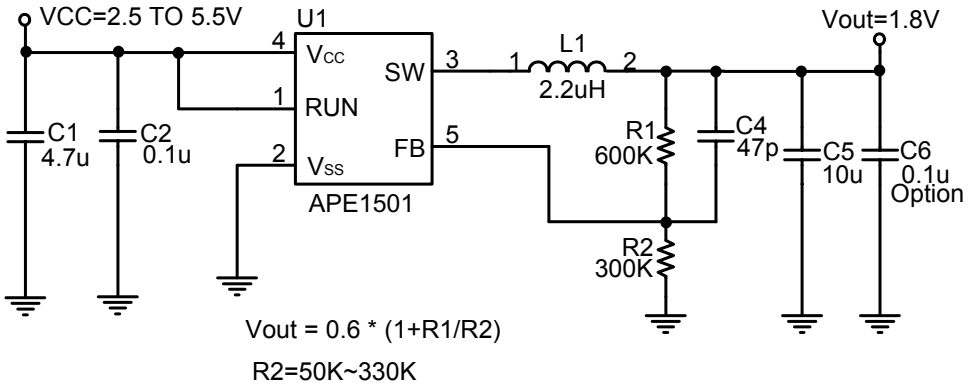

❖ Function Descriptions

Operation

APE1501 is a monolithic switching mode Step-Down DC-DC converter. It utilizes internal MOSFETs to achieve high efficiency and can generate very low output voltage by using internal reference at 0.6V. It operates at a fixed switching frequency, and uses the slope compensated current mode architecture. This Step-Down DC-DC Converter supplies 600mA output current at V_{CC} = 3V with input voltage range from 2.5V to 5.5V.

Current Mode PWM Control

Slope compensated current mode PWM control provides stable switching and cycle-by-cycle current limit for excellent load and line responses and protection of the internal main switch (P-CH MOSFET) and synchronous rectifier (N-CH MOSFET). During normal operation, the internal P-CH MOSFET is turned on for a certain time to ramp the inductor current at each rising edge of the internal oscillator, and switched off when the peak inductor current is above the error voltage. The current comparator, I_{COMP}, limits the peak inductor current. When the main switch is off, the synchronous rectifier will be turned on immediately and stay on until either the inductor current starts to reverse, as indicated by the current reversal comparator, I_{ZERO}, or the beginning of the next clock cycle. The OVDET comparator controls output transient overshoots by turning the main switch off and keeping it off until the fault is no longer present.

❖ Function Descriptions

Idle Mode Operation

At very light loads, the APE1501 automatically enters Idle Mode. In the Idle Mode, the inductor current may reach zero or reverse on each pulse. The PWM control loop will automatically skip pulses to maintain output regulation. The bottom MOSFET is turned off by the current reversal comparator, I_{ZERO} and the switch voltage will ring. This is discontinuous mode operation, and is normal behavior for the switching regulator.

When the input voltage decreases toward the value of the output voltage, the APE1501 allows the main switch to remain on for more than one switching cycle and increases the duty cycle until it reaches 100%. The output voltage then is the input voltage minus the voltage drop across the main switch and the inductor. At low input supply voltage, the $R_{DS(ON)}$ of the P-CH MOSFET increases, and the efficiency of the converter decreases. Caution must be exercised to ensure the heat dissipated not to exceed the maximum junction temperature of the IC.

Maximum Load Current

The APE1501 will operate with input supply voltage as low as 2.5V, however, the maximum load current decreases at lower input due to large IR drop on the main switch and synchronous rectifier. The slope compensation signal reduces the peak inductor current as a function of the duty cycle to prevent sub-harmonic oscillations at duty cycles greater than 50%. Conversely the current limit increases as the duty cycle decreases.

❖ Application Information

Setting the Output Voltage

Application circuit item shows the basic application circuit with APE1501 adjustable output version. The external resistor sets the output voltage according to the following equation:

$$V_{OUT} = 0.6V \times \left(1 + \frac{R1}{R2}\right)$$

Table 1 Resistor select for output voltage setting

V_{OUT}	R2	R1
1.2V	300K	300K
1.5V	300K	450K
1.8V	300K	600K
2.5V	300K	950K

Inductor Selection

For most designs, the APE1501 operates with inductors of 1μH to 4.7μH. Low inductance values are physically smaller but require faster switching, which results in some efficiency loss. The inductor value can be derived from the following equation:

$$L = \frac{V_{OUT} \times (V_{IN} - V_{OUT})}{V_{IN} \times \Delta I_L \times f_{OSC}}$$

Where is inductor Ripple Current. Large value inductors lower ripple current and small value inductors result in high ripple currents. Choose inductor ripple current approximately 35% of the maximum load current 600mA, ΔI_L=210mA.

Table 2 Inductor select for output voltage setting (V_{CC}=3.6V)

V_{OUT}	1.2V	1.5V	1.8V	2.5V
Inductor	2.7uH	2.7uH	2.7uH	2.2uH
Part Number WE-TPC	7440430027	7440430027	7440430027	7440430022

Note: Part type MH or M (www.we-online.com)

For output voltages above 2.0V, when light-load efficiency is important, the minimum recommended inductor is 2.2μH. For optimum voltage-positioning load transients, choose an inductor with DC series resistance in the 50mΩ to 150mΩ range. For higher efficiency at heavy loads (above 200mA), or minimal load regulation (but some transient overshoot), the resistance should be kept below 100mΩ. The DC current rating of the inductor should be at least equal to the maximum load current plus half the ripple current to prevent core saturation (600mA+105mA).

Input Capacitor Selection

The input capacitor reduces the surge current drawn from the input and switching noise from the device. The input capacitor impedance at the switching frequency shall be less than input source impedance to prevent high frequency switching current passing to the input. A low ESR input capacitor sized for maximum RMS current must be used. Ceramic capacitors with X5R or X7R dielectrics are highly recommended because of their low ESR and small temperature coefficients. A 4.7µF ceramic capacitor for most applications is sufficient.

Output Capacitor Selection

The output capacitor is required to keep the output voltage ripple small and to ensure regulation loop stability. The output capacitor must have low impedance at the switching frequency. Ceramic capacitors with X5R or X7R dielectrics are recommended due to their low ESR and high ripple current.

Compensation Capacitor Selection

The compensation capacitors for increasing phase margin provide additional stability. It is required and more than 22p, Refer to Demo Board Schematic, The optimum values for C4 is 47pF.

Layout Guidance

When laying out the PC board, the following suggestions should be taken to ensure proper operation of the APE1501. These items are also illustrated graphically in below.

1. The power traces, including the GND trace, the SW trace and the V_{CC} trace should be kept short, direct and wide to allow large current flow. Put enough multiply-layer pads when they need to change the trace layer.
2. Connect the input capacitor C1&C2 to the V_{CC} pin as closely as possible to get good power filter effect.
3. Keep the switching node, SW, away from the sensitive FB node.
4. Do not trace signal line under inductor.

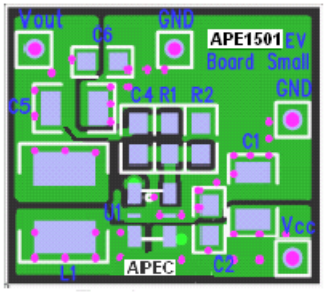

Top Layer

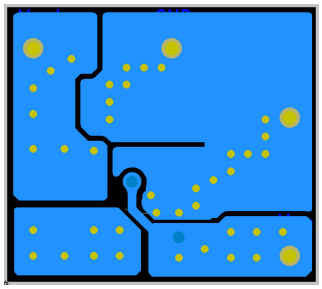

Bottom Layer

❖ Typical Characteristics

Load transient Response Idle Mode to PWM Mode (V_{IN}=3.6V, V_{OUT}=1.8V)

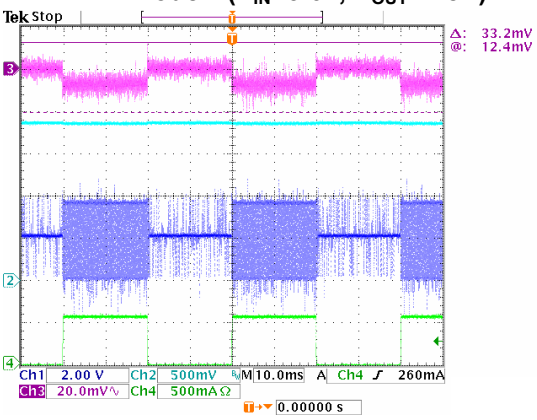

Load transient Response PWM Mode Only (V_{IN}=3.6V, V_{OUT}=1.8V)

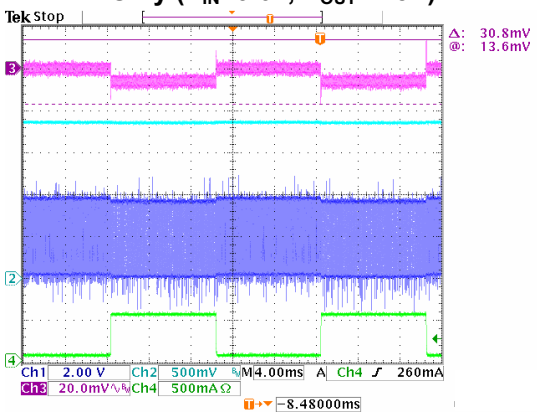

V_{RIPPLE} (V_{IN}=3.6V, V_{OUT}=1.8V, I_{OUT}=0.6A)

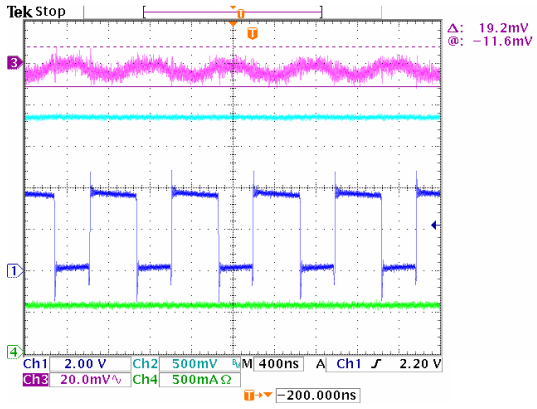

Efficiency VS Output Current (V_{OUT}=1.8V)

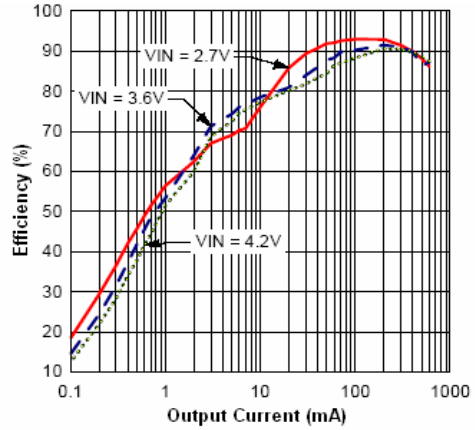

V_{FB} VS V_{IN}

I_{OUT}=0.05A

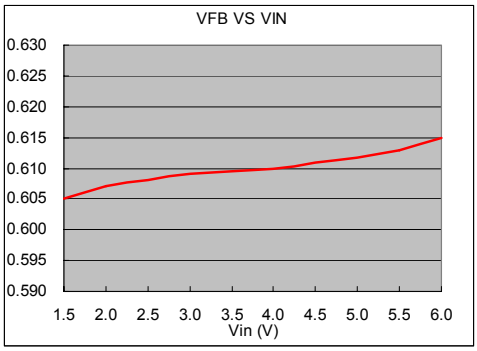

I_{CCQ} VS V_{IN}

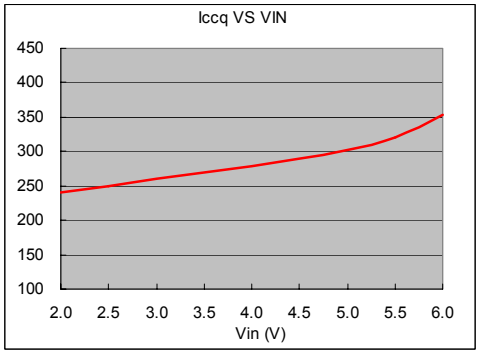

❖ Typical Characteristics

Efficiency VS Output Current

(V_{OUT}=1.2V,L=10uH DCR=0.07ohm)

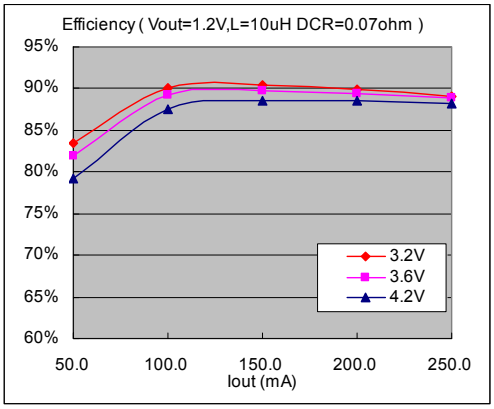

Efficiency VS Output Current

(V_{OUT}=1.2V,L=10uH DCR=0.15ohm)

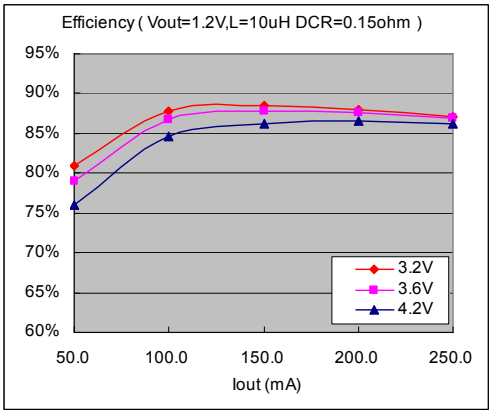

Efficiency VS Output Current

(V_{OUT}=1.2V,L=2.7uH DCR=0.06ohm)

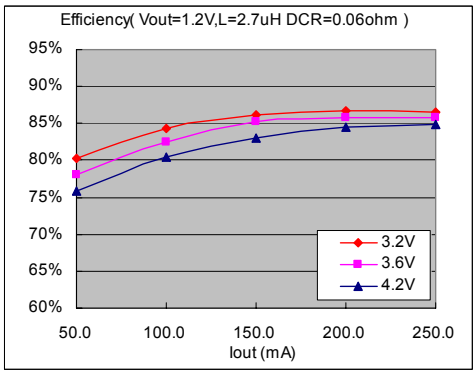

Package Outline : SOT-23-5L

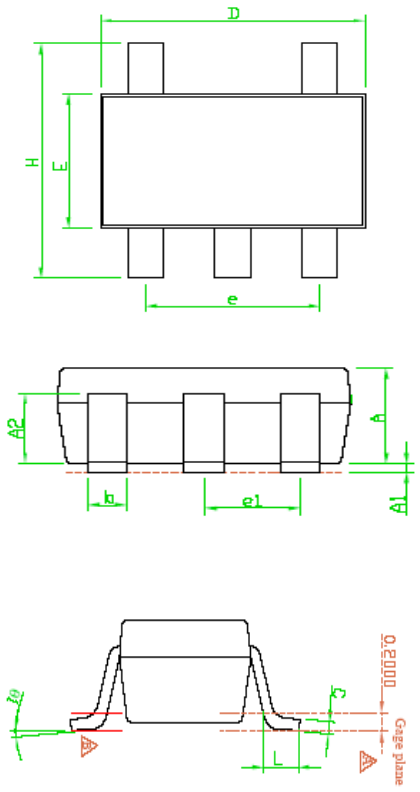

SYMBOLS	Millimeters		
	MIN	NOM	MAX
A	1.00	1.10	1.30
A1	0.00	---	0.10
A2	0.70	0.80	0.90
b	0.35	0.40	0.50
C	0.10	0.15	0.25
D	2.70	2.90	3.10
E	1.50	1.60	1.80
e	---	1.90(TYP)	---
H	2.60	2.80	3.00
L	0.37	---	---
θ1	1°	5°	9°
e2	---	0.95(TYP)	---

Note 1：Package Body Sizes Exclude Mold Flash Protrusions or Gate Burrs.

Note 2：Tolerance ± 0.1000 mm(4mil) Unless Otherwise Spe- cified.

Note 3：Coplanarity：0.1000 mm

Note 4：Dimension L Is Measured in Gage plane.

Part Marking Information & Packing : SOT-23 -5L

