香港至恩科技有限公司
www.to-grace.com
公司授权代理销售LITE-ON:光耦，贴片LED灯等
进口原装，现货供应，价格优势，技术支持
电话：0755-83464948 传真：0755-83464076



APBDA3020QBDCGKC-GX

3.0 x 2.0 mm Right Angle SMD LED

DESCRIPTIONS

- The Blue source color devices are made with InGaN Light Emitting Diode
- The Green source color devices are made with AlGaInP on GaAs substrate Light Emitting Diode
- Electrostatic discharge and power surge could damage the LEDs
- It is recommended to use a wrist band or anti-electrostatic glove when handling the LEDs
- All devices, equipments and machineries must be electrically grounded

FEATURES

- 3.0 x 2.8 x 2.0 mm right angle SMD LED, 2.0 mm thickness
- Low power consumption
- Ideal for backlight and indicator
- Package: 2000 pcs / reel
- When soldered in the sideview configuration, the maximum shear tolerance of the epoxy lens is 300g
- Moisture sensitivity level: 3
- Tinned pads for improved solderability
- RoHS compliant

APPLICATIONS

- Backlight
- Status indicator
- Home and smart appliances
- Wearable and portable devices
- Healthcare applications

ATTENTION

Observe precautions for handling electrostatic discharge sensitive devices

PACKAGE DIMENSIONS

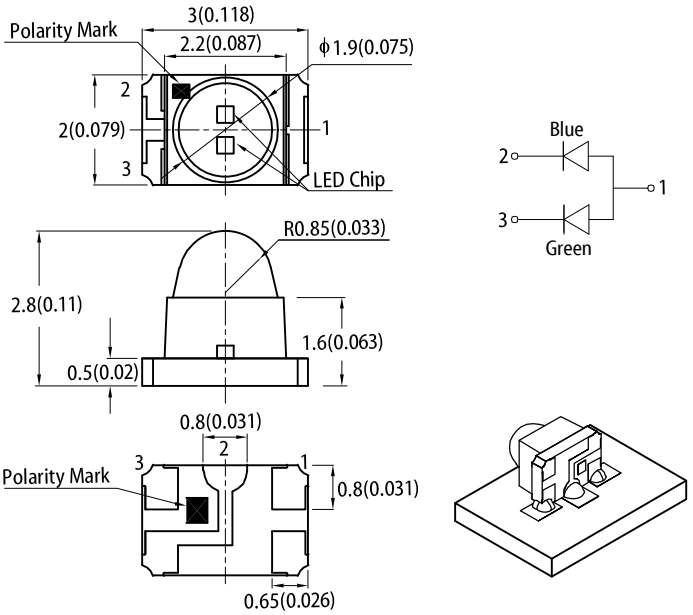

RECOMMENDED SOLDERING PATTERN

(units : mm; tolerance : ± 0.1)

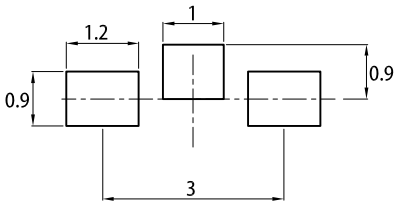

Notes:
1. All dimensions are in millimeters (inches).
2. Tolerance is ±0.2(0.008") unless otherwise noted.
3. The specifications, characteristics and technical data described in the datasheet are subject to change without prior notice.
4. The device has a single mounting surface. The device must be mounted according to the specifications.

SELECTION GUIDE

Part Number	Emitting Color (Material)	Lens Type	Iv (mcd) @ 20mA [2]		Viewing Angle [1]
			Min.	Typ.	2θ1/2
APBDA3020QBDCGKC-GX	Blue (InGaN)	Water Clear	120	300	15°
	Green (AlGaInP)		120	300	

Notes:
1. θ1/2 is the angle from optical centerline where the luminous intensity is 1/2 of the optical peak value.
2. Luminous intensity / luminous flux: +/-15%.
3. Luminous intensity value is traceable to CIE127-2007 standards.

© 2017 Kingbright. All Rights Reserved.

Download from alldatasheet.com

ELECTRICAL / OPTICAL CHARACTERISTICS at T_A=25°C

Parameter	Symbol	Emitting Color	Value		Unit
			Typ.	Max.	
Wavelength at Peak Emission I_F = 20mA	λ_{peak}	Blue Green	460 574	-	nm
Dominant Wavelength I_F = 20mA	λ_{dom} [1]	Blue Green	465 570	-	nm
Spectral Bandwidth at 50% Φ REL MAX I_F = 20mA	Δλ	Blue Green	25 20	-	nm
Capacitance	C	Blue Green	100 15	-	pF
Forward Voltage I_F = 20mA	V_F [2]	Blue Green	3.3 2.1	4.0 2.5	V
Reverse Current (V_R = 5V)	I_R	Blue Green	-	50 10	uA

Notes:
1. The dominant wavelength (λd) above is the setup value of the sorting machine. (Tolerance λd : ±1nm.)
2. Forward voltage: ±0.1V.
3. Wavelength value is traceable to CIE127-2007 standards.
4. Excess driving current and / or operating temperature higher than recommended conditions may result in severe light degradation or premature failure.

ABSOLUTE MAXIMUM RATINGS at T_A=25°C

Parameter	Symbol	Value		Unit
		Blue	Green	
Power Dissipation	P_D	120	75	mW
Reverse Voltage	V_R	5	5	V
Junction Temperature	T_J	115	115	°C
Operating Temperature	T_{op}	-40 To +85		°C
Storage Temperature	T_{stg}	-40 To +85		°C
DC Forward Current	I_F	30	30	mA
Peak Forward Current	I_{FM} [1]	150	150	mA
Electrostatic Discharge Threshold (HBM)	-	250	3000	V

Notes:
1. 1/10 Duty Cycle, 0.1ms Pulse Width.
2. Relative humidity levels maintained between 40% and 60% in production area are recommended to avoid the build-up of static electricity – Ref JEDEC/JESD625-A and JEDEC/J-STD-033.

RoHS © 2017 Kingbright. All Rights Reserved.

Download from alldatasheet.com

TECHNICAL DATA

RELATIVE INTENSITY vs. WAVELENGTH

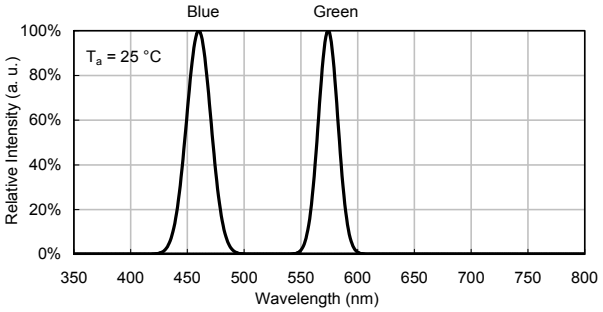

SPATIAL DISTRIBUTION

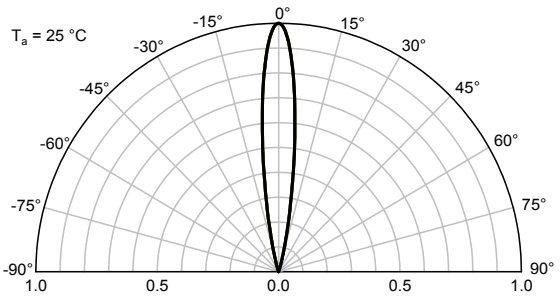

BLUE

Forward Current vs. Forward Voltage

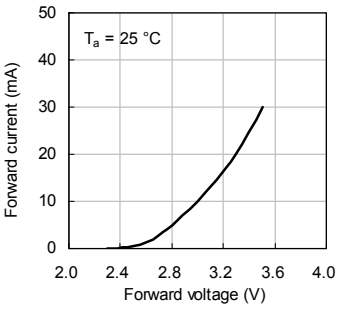

Luminous Intensity vs. Forward Current

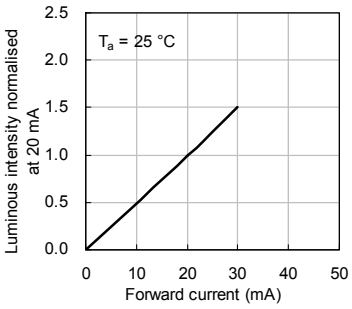

Forward Current Derating Curve

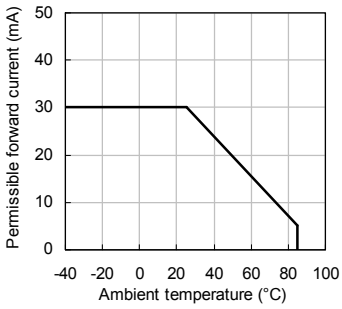

Luminous Intensity vs. Ambient Temperature

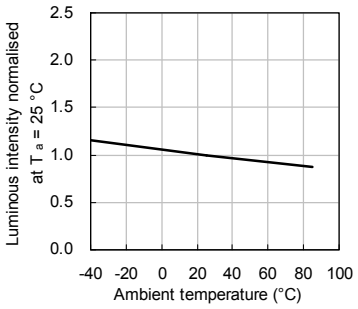

GREEN

Forward Current vs. Forward Voltage

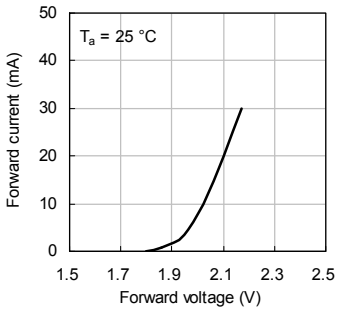

Luminous Intensity vs. Forward Current

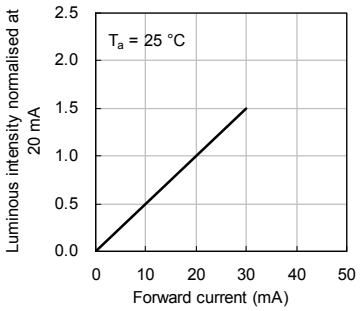

Forward Current Derating Curve

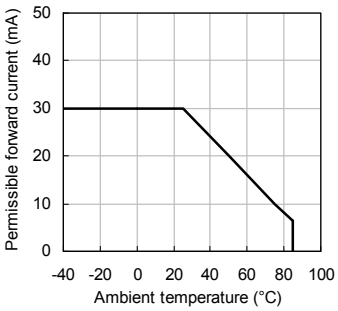

Luminous Intensity vs. Ambient Temperature

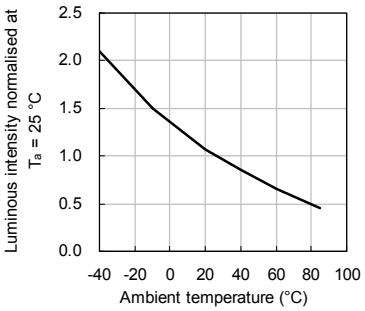

© 2017 Kingbright. All Rights Reserved.

Download from alldatasheet.com

TECHNICAL DATA

REFLOW SOLDERING PROFILE for LEAD-FREE SMD PROCESS

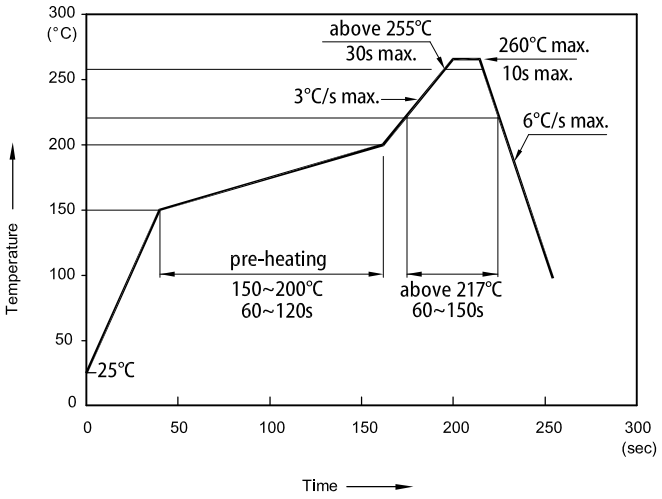

Notes:
1. *Don't cause stress to the LEDs while it is exposed to high temperature.*
2. *The maximum number of reflow soldering passes is 2 times.*
3. *Reflow soldering is recommended. Other soldering methods are not recommended as they might cause damage to the product.*

TAPE SPECIFICATIONS (units : mm)

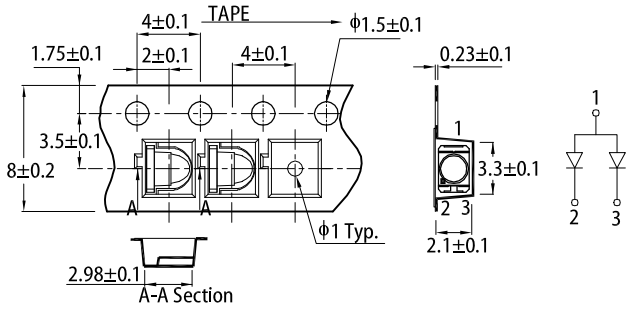

REEL DIMENSION (units : mm)

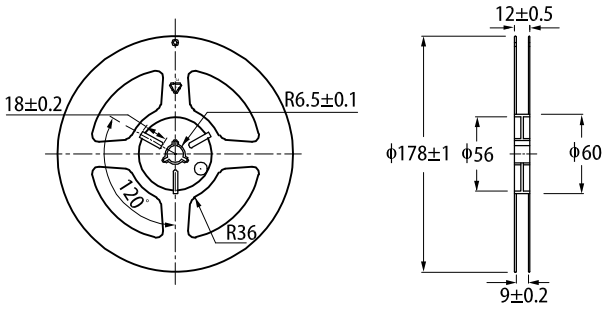

PACKING & LABEL SPECIFICATIONS

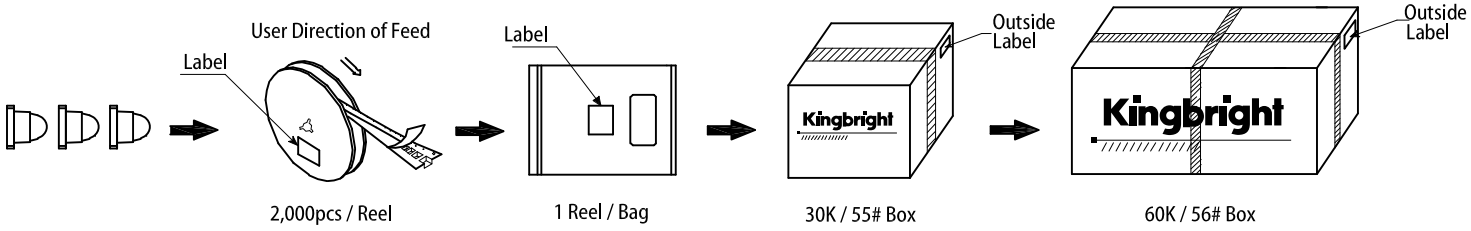

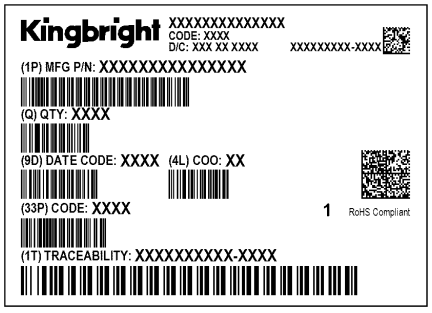

PRECAUTIONARY NOTES

1. The information included in this document reflects representative usage scenarios and is intended for technical reference only.
2. The part number, type, and specifications mentioned in this document are subject to future change and improvement without notice. Before production usage customer should refer to the latest datasheet for the updated specifications.
3. When using the products referenced in this document, please make sure the product is being operated within the environmental and electrical limits specified in the datasheet. If customer usage exceeds the specified limits, Kingbright will not be responsible for any subsequent issues.
4. The information in this document applies to typical usage in consumer electronics applications. If customer's application has special reliability requirements or have life-threatening liabilities, such as automotive or medical usage, please consult with Kingbright representative for further assistance.
5. The contents and information of this document may not be reproduced or re-transmitted without permission by Kingbright.
6. All design applications should refer to Kingbright application notes available at http://www.KingbrightUSA.com/ApplicationNotes

RoHS © 2017 Kingbright. All Rights Reserved.

Download from alldatasheet.com