Class AB Stereo Headphone Driver

Features

- Operating Voltage
  - Single Supply 3V to 6V
  - Dual Supply ±1.5V to ± 3.0V
- High Signal-to-Noise Ratio 100dB
- Low Distortion -65dB
- Large Output Voltage Swing
- Excellent Power Supply Ripple Rejection
- Low Power Consumption
- Short-circuit Elimination
- Wide Temperature Range
- No Switch ON/OFF Clicks
- Available in 8 pin SOP ,DIP or TSSOP Package

Applications

- Portable Digital Audio

Gereral Description

The APA2308 is an integrated class AB stereo headphone driver contained in an SO-8, a DIP-8 or a TSSOP-8 plastic package. The APA2308 is capable of delivering 280mW of max. Output power to an 8Ω load or 110mW to a 32Ω load with less than 10% (THD+N) from a 5V power supply. The device is fabricated in a CMOS process and has been primarily developed for portable digital audio applications .

Ordering and Marking Information

<table>
<tr><td>APA2308 □□-□□
Handling Code
Temp. Range
Package Code</td><td colspan="2">Package Code
J : PDIP - 8 K : SOP - 8
O : TSSOP - 8
Temp. Range
I : - 40 to 85 ° C
Handling Code
TU : Tube TR : Tape & Reel</td></tr>
<tr><td>APA2308 J :</td><td>APA2308
XXXXX</td><td>XXXXX - Date Code</td></tr>
<tr><td>APA2308 K :</td><td>APA2308
XXXXX</td><td>XXXXX - Date Code</td></tr>
<tr><td>APA2308 O :</td><td>APA2308
XXXXX</td><td>XXXXX - Date Code</td></tr>
</table>

ANPEC reserves the right to make changes to improve reliability or manufacturability without notice, and advise customers to obtain the latest version of relevant information to verify before placing orders.

Block Diagram

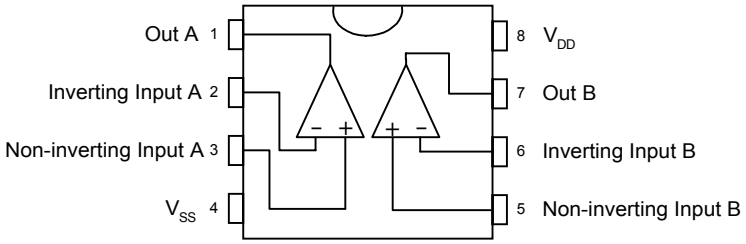

APA2308

Absolute Maximum Ratings

Symbol	Parameter	Rating	Unit
V_{DD}	Supply Voltage	7	V
$T_{SC(O)}$	Output Short-circuit Duration,at TA=25°C,PTOT=1W	20	S
T_A	Operating Ambient Temperature range	-40 to 85	°C
T_J	Maximum Junction Temperature	150	°C
T_{STG}	Storage Temperature Range	-65 to +150	°C
T_S	Soldering Temperature , 10 seconds	260	°C
V_{ESD}	Electrostatic Discharge	-3000 to 3000*1	V

Note : *1. Human body model : C=100pF , R=1500Ω , 3 positive pulses plus 3 negative pulses

Thermal Characteristics

Symbol	Parameter	Value	Unit
R_{THJA}	Thermal Resistance from Junction to Ambient in Free Air		
	DIP-8	109	K/W
	SO-8	210	K/W

Electrical Characteristics

V_{DD}=5V , V_{SS}=0V , T_A=25°C , f_i=1kHz , R_L=32Ω (unless otherwise noted)

Symbol	Parameter	Test Condition	APA2308			Unit
			Min.	Typ.	Max	
Supply						
V_{DD}	Supply Voltage					V
	Single		3.0	5.0	6.0	
	Dual		±1.5	±2.5	±3.0	
V_{SS}	Negative Supply Voltage		-1.5	-2.5	-3.0	V
I_{DD}	Supply Current	No Load		2.5	5	MA
P_{TOT}	Total Power Dissipation	No Load		12.5	25	mW

Copyright © ANPEC Electronics Corp.

Electrical Characteristics Cont.

V_{DD}=5V, V_{SS}=0V, T_A=25°C, f_i=1kHz, R_L=32Ω (unless otherwise noted)

Symbol	Parameter	Test Condition	APA2308			Unit
			Min.	Typ.	Max	
DC Characteristics						
$V_{I(OS)}$	Input Offset Voltage			5		MV
I_{BIAS}	Input Bias Current			10		PA
V_{CM}	Common Mode Voltage		0		3.5	V
G_V	Open-loop Voltage Gain	R_L=5kΩ		75		dB
I_O	Max. Output Current	(THD+N)/S<0.1%		140		MA
R_O	Output Resistance			0.25		Ω
AC Characteristics						
V_O	Output Voltage Swing	R_L=32Ω*[1]	0.25		4.75	V
		R_L=16Ω*[1]	0.5		4.5	
PSRR	Power Supply Rejection Ratio	F_i=100Hz $V_{RIPPLE(P-P)}$ =100mV		65		dB
α_{CS}	Channel Separation	R_L=32Ω		95		dB
C_L	Load Capacitance				200	pF
(THD+N)/S	Total Harmonic Distortion Plus Noise to Signal Ratio	R_L=32Ω*[2]		-65	-60	dB
				0.05	0.1	%
S/N	Signal to Noise Ratio		90	100		dB
F_G	Unity Gain Frequency	R_L=5kΩ		5		MHz
P_O	Max. Output Power	(THD+N)/S<0.1%		84		mW
C_I	Input Capacitance			3		pF
B	Power Bandwidth	Unity Gain Inverting		20		kHz

Notes *1 : Values are proportional to V_{DD} ; (THD+N)/S < 0.1%

*2 : V_{DD}=5.0V ; $V_{O(P-P)}$=3.5V (at 0 dB)

Copyright © ANPEC Electronics Corp.

Test And Application Circuits

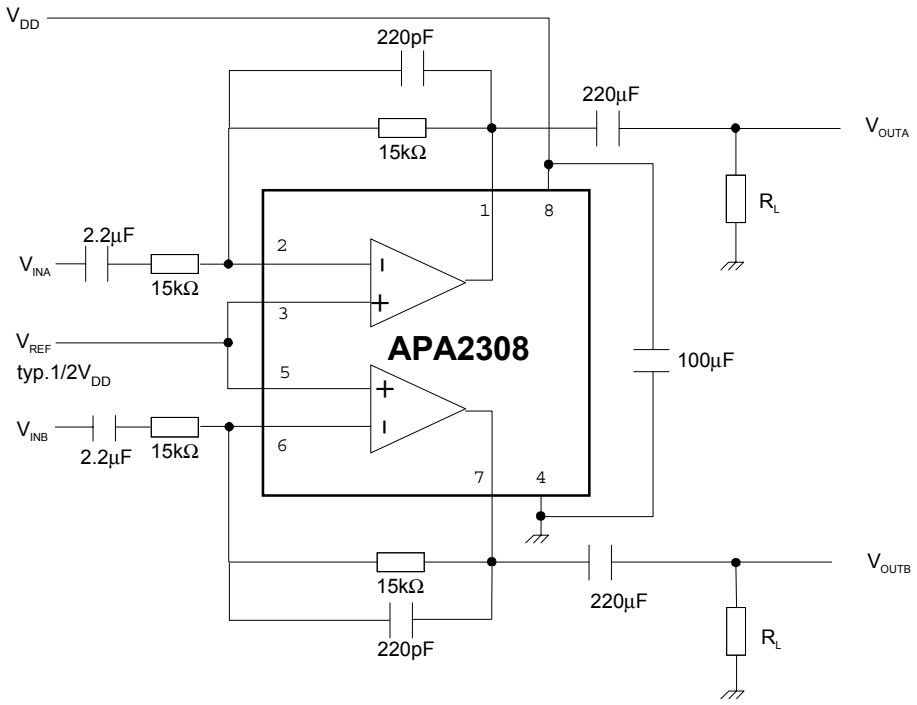

Typical Characteristics

Total Harmonic Distortion Plus Noise-to-Signal Ratio as a Function of Input Frequency

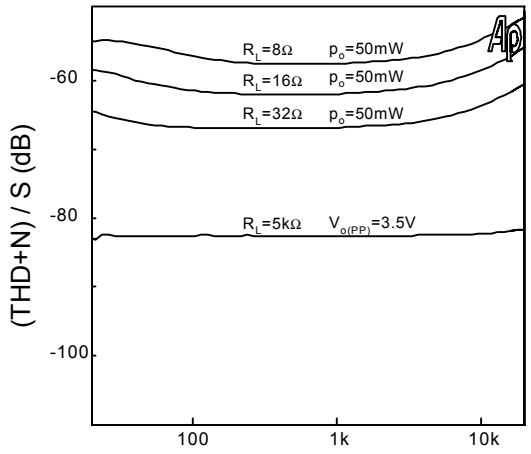

Output Power as a Function of Supply Voltage

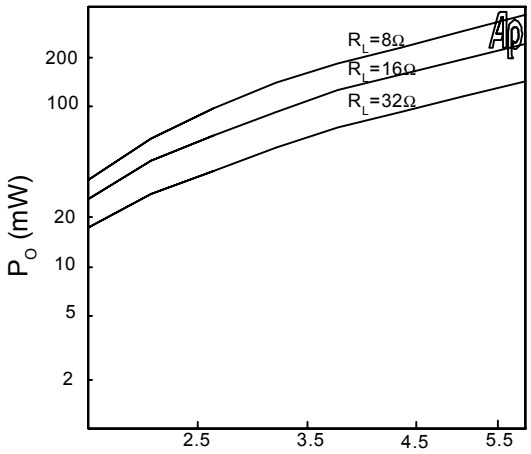

Crosstalk as a Function of Input Frequency

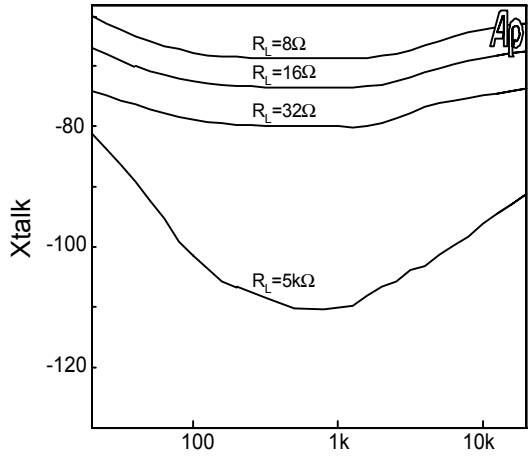

Open Loop Gain as a Function of Input Frequency

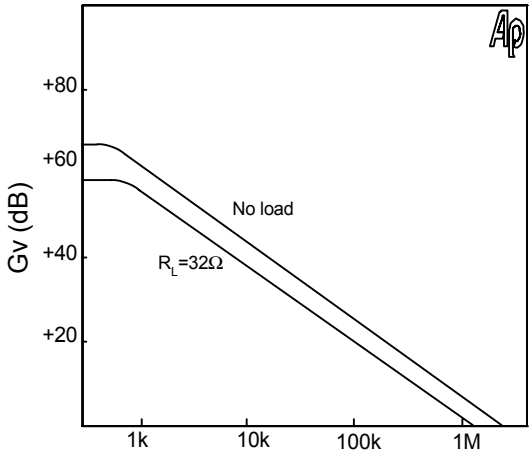

Copyright © ANPEC Electronics Corp.

Typical Characteristics Cont.

Total Harmonic Distortion Plus Noise-to-Signal Ratio as a Function of output Voltage

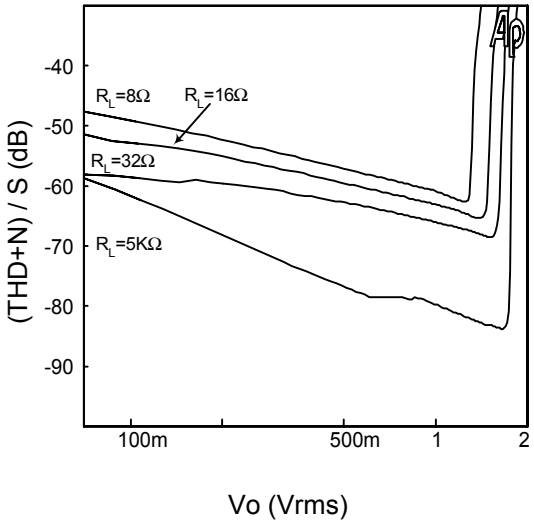

Packaging Information

PDIP-8 pin (Reference JEDEC Registration MS-001)

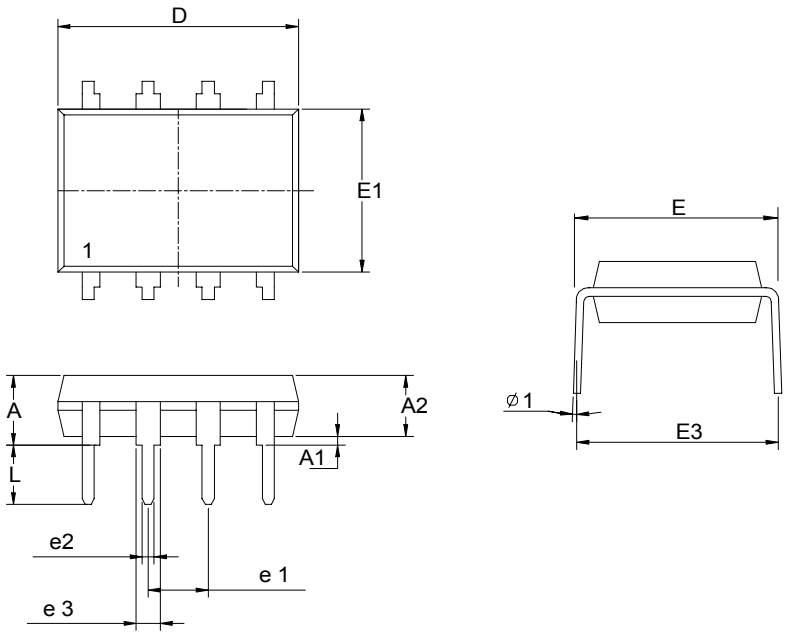

Dim	Millimeters		Inches	
	Min.	Max.	Min.	Max.
A		5.33		0.210
A1	0.38		0.015	
A2	2.92	3.68	0.115	0.145
D	9.02	10.16	0.355	0.400
e1	2.54BSC		0.100BSC	
e2	0.36	0.56	0.014	0.022
e3	1.14	1.78	0.045	0.070
E	7.62 BSC		0.300 BSC	
E1	6.10	7.11	0.240	0.280
E3		10.92		0.430
L	2.92	3.81	0.115	0.150
ϕ 1	15°		15°	

Copyright © ANPEC Electronics Corp.

Packaging Information

SOP-8 pin (Reference JEDEC Registration MS-012)

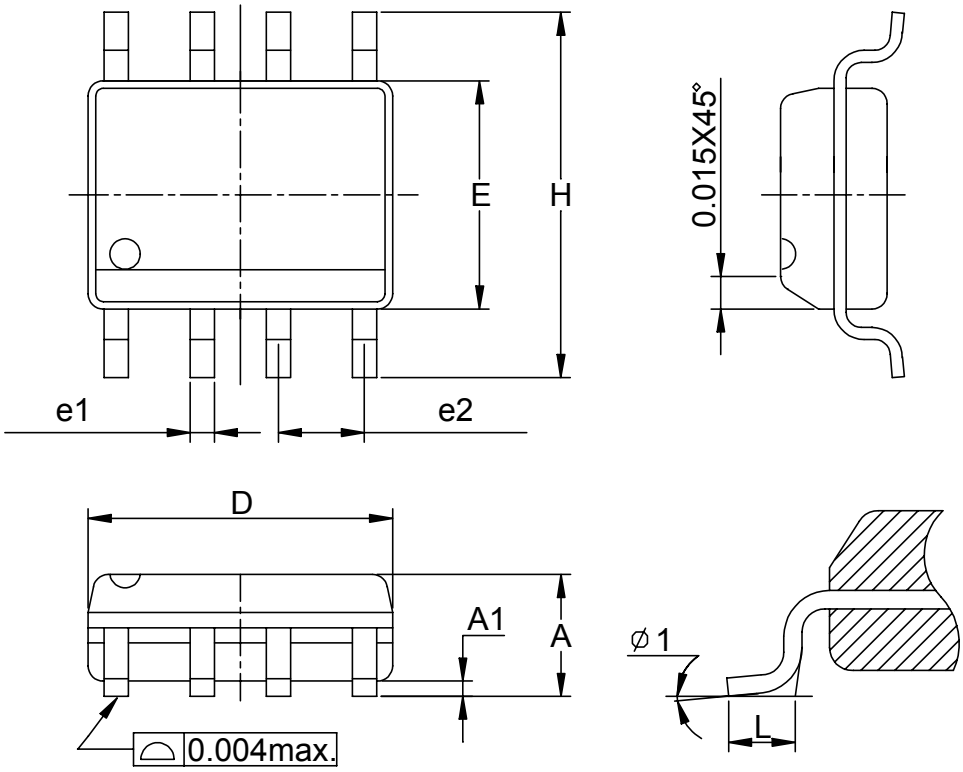

Dim	Millimeters		Inches	
	Min.	Max.	Min.	Max.
A	1.35	1.75	0.053	0.069
A1	0.10	0.25	0.004	0.010
D	4.80	5.00	0.189	0.197
E	3.80	4.00	0.150	0.157
H	5.80	6.20	0.228	0.244
L	0.40	1.27	0.016	0.050
e1	0.33	0.51	0.013	0.020
e2	1.27BSC		0.50BSC	
ϕ 1	8°		8°	

Copyright © ANPEC Electronics Corp.

Packaging Information

TSSOP-8

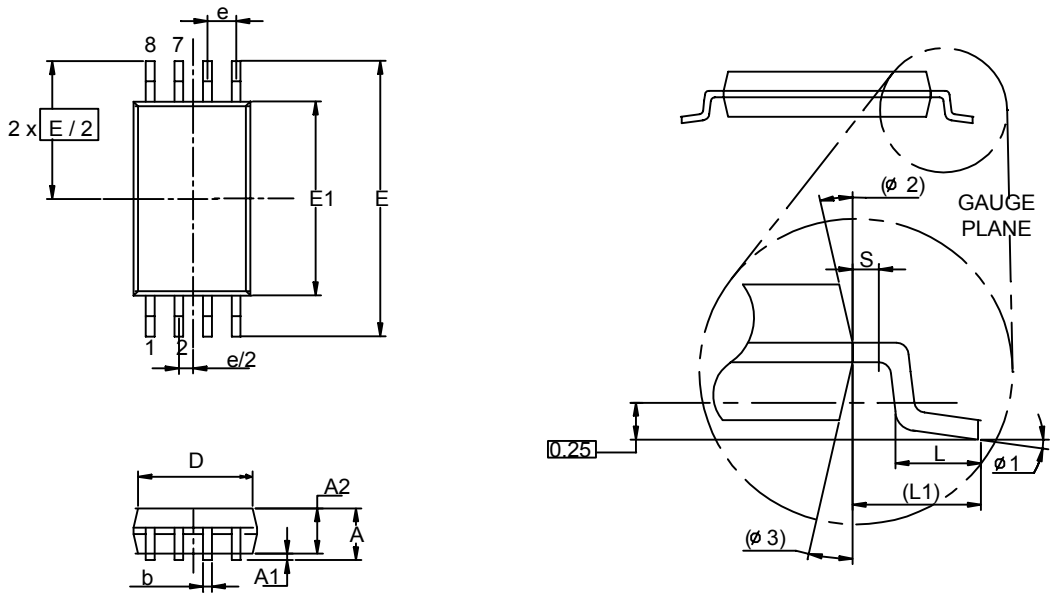

Dim	Millimeters		Inches	
	Min.	Max.	Min.	Max.
A		1.2		0.047
A1	0.00	0.15	0.000	0.006
A2	0.80	1.05	0.031	0.041
b	0.19	0.30	0.007	0.012
D	2.9	3.1	0.114	0.122
e	0.65 BSC		0.026 BSC	
E	6.40 BSC		0.252 BSC	
E1	4.30	4.50	0.169	0.177
L	0.45	0.75	0.018	0.030
L1	1.0 REF		0.039REF	
R	0.09		0.004	
R1	0.09		0.004	
S	0.2		0.008	
ϕ1	0°	8°	0°	8°
ϕ2	12° REF		12° REF	
ϕ3	12° REF		12° REF	

Copyright © ANPEC Electronics Corp.

Physical Specifications

Terminal Material	Solder-Plated Copper (Solder Material : 90/10 or 63/37 SnPb)
Lead Solderability	Meets EIA Specification RSI86-91, ANSI/J-STD-002 Category 3.

Reflow Condition (IR/Convection or VPR Reflow)

Reference JEDEC Standard J-STD-020A APRIL 1999

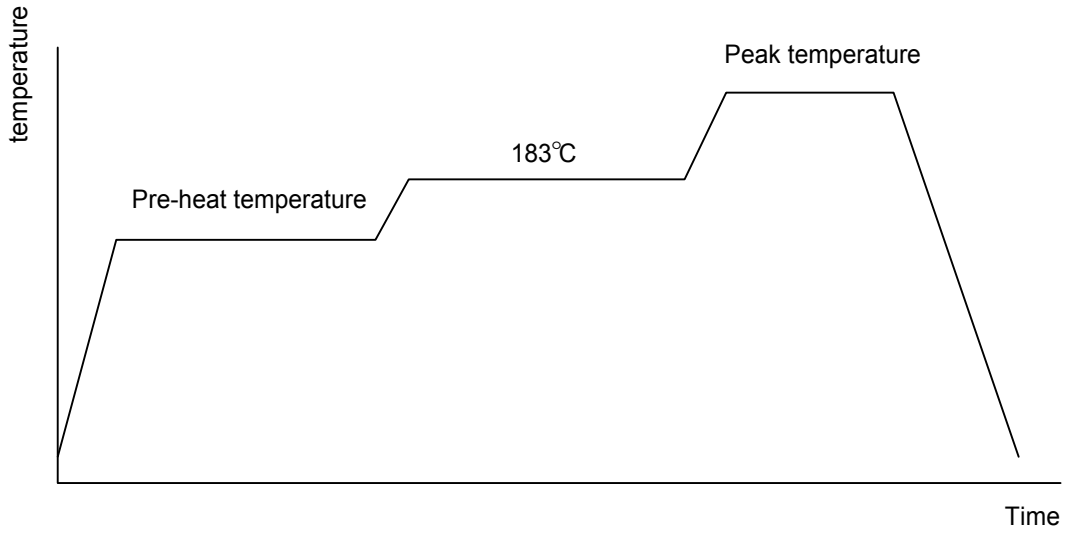

Classification Reflow Profiles

	Convection or IR/ Convection	VPR
Average ramp-up rate(183°C to Peak)	3°C/second max.	10 °C /second max.
Preheat temperature 125 ± 25°C)	120 seconds max	
Temperature maintained above 183°C	60 – 150 seconds	
Time within 5°C of actual peak temperature	10 –20 seconds	60 seconds
Peak temperature range	220 +5/-0°C or 235 +5/-0°C	215-219°C or 235 +5/-0°C
Ramp-down rate	6 °C /second max.	10 °C /second max.
Time 25°C to peak temperature	6 minutes max.	

Package Reflow Conditions

pkg. thickness ≥ 2.5mm and all bgas	pkg. thickness < 2.5mm and pkg. volume ≥ 350 mm³	pkg. thickness < 2.5mm and pkg. volume < 350mm³
Convection 220 +5/-0 °C		Convection 235 +5/-0 °C
VPR 215-219 °C		VPR 235 +5/-0 °C
IR/Convection 220 +5/-0 °C		IR/Convection 235 +5/-0 °C

Copyright © ANPEC Electronics Corp.

Reliability test Program

Test item	Method	Description
SOLDERABILITY	MIL-STD-883D-2003	245° C , 5 SEC
HOLT	MIL-STD-883D-1005.7	1000 Hrs Bias @ 125 °C
PCT	JESD-22-B, A102	168 Hrs, 100 % RH , 121°C
TST	MIL-STD-883D-1011.9	-65°C ~ 150°C, 200 Cycles
ESD	MIL-STD-883D-3015.7	VHBM > 2KV, VMM > 200V
Latch-Up	JESD 78	10ms , I_{tr} > 100mA

Carrier Tape & Reel Dimensions

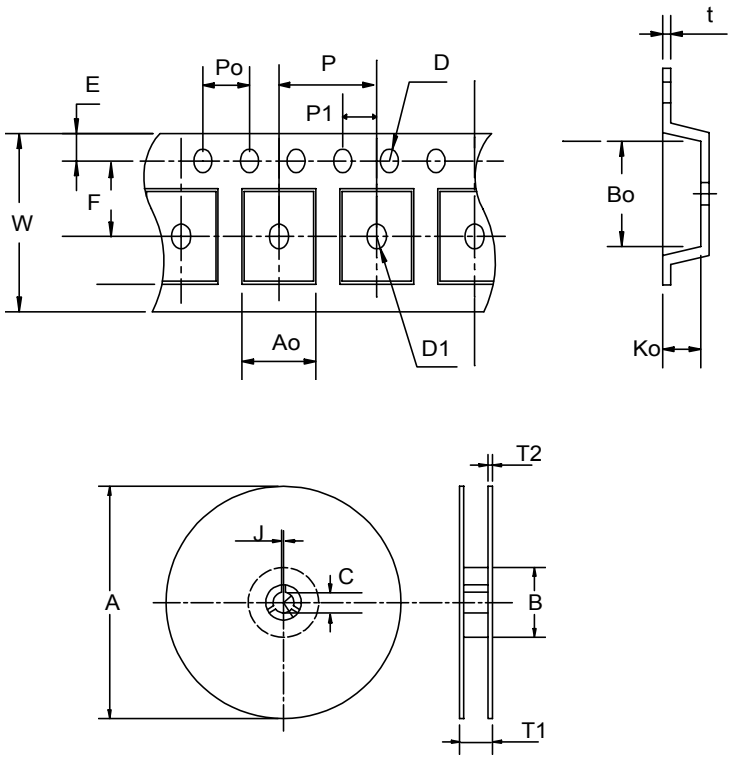

Application	A	B	C	J	T1	T2	W	P	E
SOP- 8	330 ± 1	62 +1.5	12.75+ 0.15	2 ± 0.5	12.4 ± 0.2	2 ± 0.2	12± 0. 3	8± 0.1	1.75±0.1
	F	D	D1	Po	P1	Ao	Bo	Ko	t
	5.5± 1	1.55 +0.1	1.55+ 0.25	4.0 ± 0.1	2.0 ± 0.1	6.4 ± 0.1	5.2± 0. 1	2.1± 0.1	0.3±0.013
Application	A	B	C	J	T1	T2	W	P	E
TSSOP-8	330 ± 1	62 +1.5	12.75+ 0.15	2 + 0.5	12.4 ± 0.2	2 ± 0.2	12± 0. 3	8± 0.1	1.75±0.1
	F	D	D1	Po	P1	Ao	Bo	Ko	t
	5.5 ± 0. 1	1.5 + 0.1	1.5 + 0.1	4.0 ± 0.1	2.0 ± 0.1	7.0 ± 0.1	3.6 ± 0.3	1.6 ± 0.1	0.3±0.013

(mm)

Copyright © ANPEC Electronics Corp.

Cover Tape Dimensions

Application	Carrier Width	Cover Tape Width	Devices Per Reel
SOP- 8	12	9.3	2500
TSSOP- 8	12	9.3	2500

Customer Service

Anpec Electronics Corp.
Head Office :
5F, No. 2 Li-Hsin Road, SBIP,
Hsin-Chu, Taiwan, R.O.C.
Tel : 886-3-5642000
Fax : 886-3-5642050
Taipei Branch :
7F, No. 137, Lane 235, Pac Chiao Rd.,
Hsin Tien City, Taipei Hsien, Taiwan, R. O. C.
Tel : 886-2-89191368
Fax : 886-2-89191369