2A 420kHz PWM BUCK DC-DC CONVERTER AP3005

General Description

The AP3005 is a 420kHz fixed frequency PWM buck (step-down) DC-DC converter, capable of driving a 2A load with high efficiency, low ripple and excellent line and load regulation. The device includes a voltage reference, an oscillation circuit, an error amplifier, an internal PMOS and etc.

The PWM control circuit is able to adjust the duty ratio linearly from 0 to 100%. The enable function, over current protection function, short circuit protection function and soft-start function are built inside. When OCP or SCP happens, the operation frequency will be reduced from 420kHz to 40kHz. An internal compensation block is employed to minimize external components.

The AP3005 serves as an ideal power supply unit for portable devices, especially for chip set power in portable systems. It's widely used for PDVD, LCD monitor and DPF chip set powers.

The AP3005 is available in SOIC-8 package.

Features

- 2A Constant Output Current
- 130mΩ R_{DSON} Internal Power MOSFET Switch
- Up to 94% Efficiency
- Fixed 420kHz Frequency
- Wide 4.75V to 25V Input Voltage Range
- Output Voltage Adjustable from 0.8V to 21V
- Built in Thermal Shutdown Function
- Built-in Current Limit Function
- Built-in Soft-Start Function
- Support Ceramic or Electrolytic Capacitors

Applications

- Portable DVD
- LCD Monitor/LCD TV
- Digital Photo Frame
- ADSL
- Set-up Box



SOIC-8

Figure 1. Package Type of AP3005

Pin Configuration

M Package

(SOIC-8)

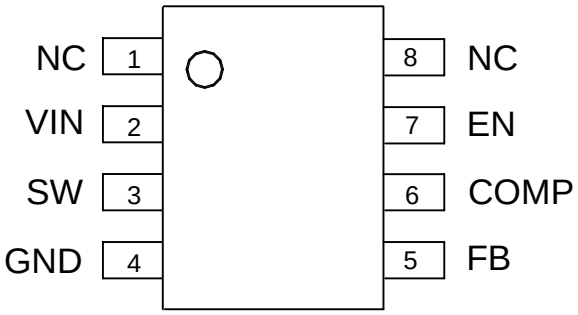

Figure 2. Pin Configuration of AP3005 (Top View)

Pin Description

Pin Number	Pin Name	Function
1, 8	NC	No Connection
2	VIN	Supply Voltage Input Pin. The AP3005 operates from a 4.75V to 25V DC voltage. Bypass VIN to GND with a suitable large capacitor to eliminate noise on the input
3	SW	Power Switch Output Pin. SW is the switch node that supplies power to the output
4	GND	Ground Pin.
5	FB	Feedback Pin. Through an external resistor divider network, FB senses the output voltage and regulates it. To prevent current limit run away in a short circuit fault condition, the frequency feedback comparator lowers the oscillator frequency to 40kHz when the FB voltage is below 0.52V. The feedback threshold voltage is 0.8V
6	COMP	Compensation Pin. This pin is the output of the error amplifier. Frequency compensation is done at this pin by connecting a series RC to ground (parallel a C if necessary)
7	EN	Enable Pin. Drive EN pin high to turn on the device, drive it low to turn off. Default of this pin is high level

Functional Block Diagram

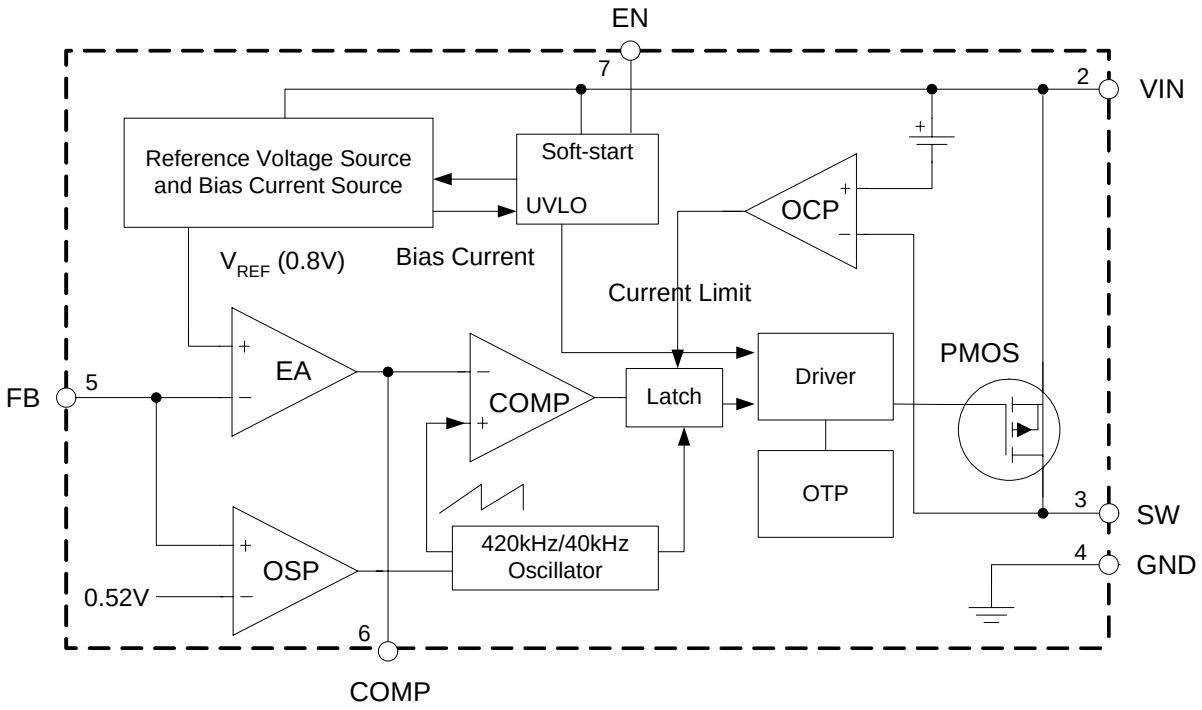

Figure 3. Functional Block Diagram of AP3005

Ordering Information

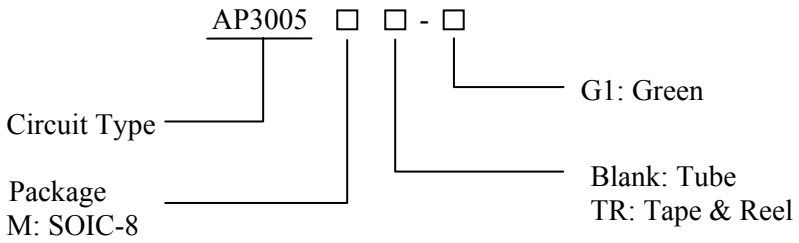

Package	Temperature Range	Part Number	Marking ID	Packing Type
SOIC-8	-40 to 125°C	AP3005M-G1	3005M-G1	Tube
		AP3005MTR-G1	3005M-G1	Tape & Reel

BCD Semiconductor's Pb-free products, as designated with "G1" suffix in the part number, are RoHS compliant and green.

Absolute Maximum Ratings (Note 1)

Parameter	Symbol	Value	Unit
Input Voltage	V_{IN}	-0.3 to 30	V
FB Pin Voltage	V_{FB}	-0.3 to 6	V
EN Pin Voltage	V_{EN}	-0.3 to V_{IN}	V
COMP Pin Voltage	V_{COMP}	-0.3 to 6	V
SW Pin Voltage	V_{SW}	-0.3 to V_{IN}	V
Power Dissipation	P_D	Internally limited	mW
Thermal Resistance (Junction to Ambient, No Heat Sink, Free Air)	θ_{JA}	100	ºC/W
Operating Junction Temperature	T_J	150	ºC
Storage Temperature	T_{STG}	-65 to 150	ºC
Lead Temperature (Soldering, 10sec)	T_{LEAD}	260	ºC
ESD (Human Body Model)	ESD	2000	V

Note 1: Stresses greater than those listed under "Absolute Maximum Ratings" may cause permanent damage to the device. These are stress ratings only, and functional operation of the device at these or any other conditions beyond those indicated under "Recommended Operating Conditions" is not implied. Exposure to "Absolute Maximum Ratings" for extended periods may affect device reliability.

Recommended Operating Conditions

Parameter	Symbol	Min	Max	Unit
Input Voltage	V_{IN}	4.75	25	V
Output Voltage	V_{OUT}	0.8	21	V
Operating Junction Temperature	T_J	-40	125	ºC

Electrical Characteristics

V_{CC}=12V, V_{OUT}=5V, T_A=25℃, unless otherwise specified.

Parameters	Symbol	Conditions	Min	Typ	Max	Unit
Input Voltage	V_{IN}		4.75		25	V
Shutdown Quiescent Current	I_{SHDN}	V_{EN}=0.4V		44	60	μA
Quiescent Current	I_Q	V_{EN}=2V, V_{FB}=1.3V		1.3	2.5	mA
Feedback Voltage	V_{FB}	V_{IN}=5V to 25V	0.784	0.8	0.816	V
Feedback Bias Current	I_{FB}	V_{FB}=1.3V		-0.1	-0.5	μA
Switch Current Limit	I_{LIM}	T_C=25℃	2.5	3.4		A
Oscillator Frequency	f_{OSC}		336	420	504	kHz
Frequency of Current Limit or Short Circuit Protection	f_{OSC1}	V_{FB}<0.52V		40		kHz
Error Amplifier Voltage Gain	G_V			1000		V/V
Error Amplifier Transconductance	G_S			700		μA/V
EN Pin Threshold	V_H		1.5			V
	V_L				0.7	V
EN Pin Input Leakage Current	I_{EN}	V_{EN}=2.5V		-5	-10	μA
Internal PMOS ON Resistance	R_{DSON}	V_{IN}=12V, V_{FB}=0.65V, V_{EN}=12V, I_{OUT}=2A, T_C=25℃		130	150	mΩ
Maximum Duty Cycle	D_{MAX}	V_{FB}=0.65V, I_{SW}=0.1A			100	%
Thermal Shutdown	T_{OTSD}			155		ºC
Thermal Shutdown Hysteresis	T_{HYS}			20		ºC

Typical Performance Characteristics

V_{CC}=12V, V_{OUT}=5V, T_A=25℃, unless otherwise specified.

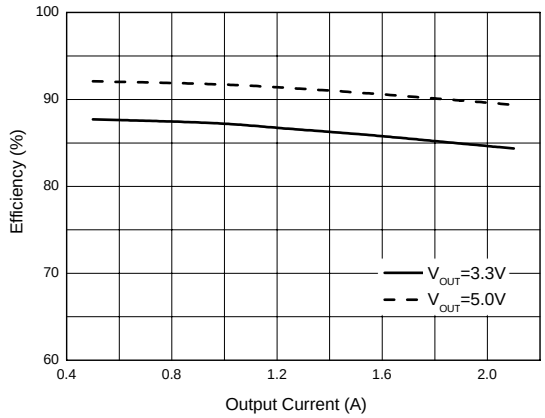

Figure 4. Efficiency vs. Output Current

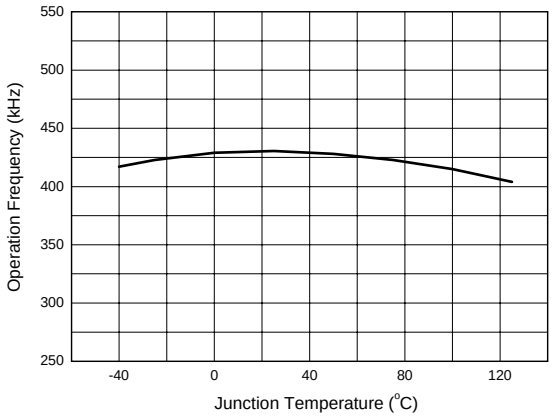

Figure 5. Operation Frequency vs. Junction Temperature

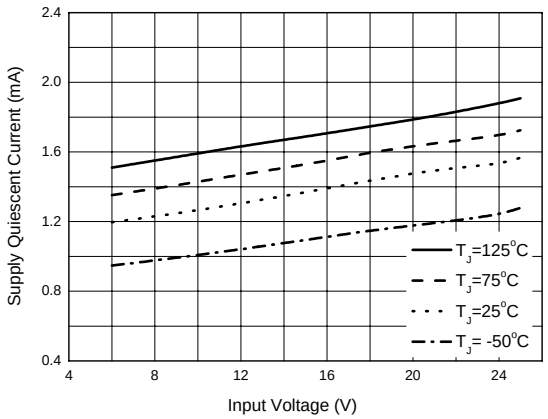

Figure 6. Supply Quiescent Current vs. Input Voltage

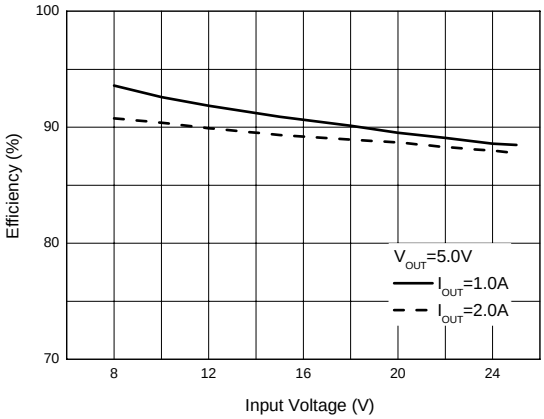

Figure 7. Efficiency vs. Input Voltage

Typical Performance Characteristics (Continued)

V_{CC}=12V, V_{OUT}=5V, T_A=25℃, unless otherwise specified.

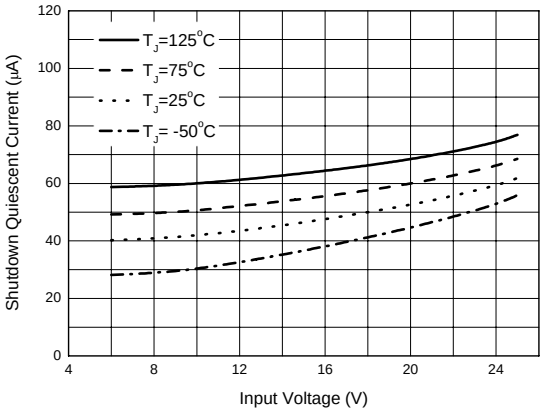

Figure 8. Shutdown Quiescent Current vs. Input Voltage

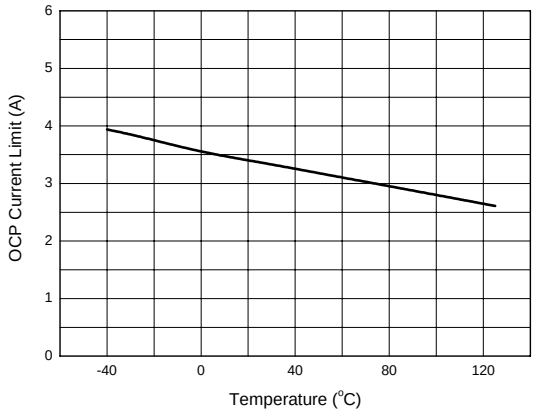

Figure 9. OCP Current Limit vs. Temperature

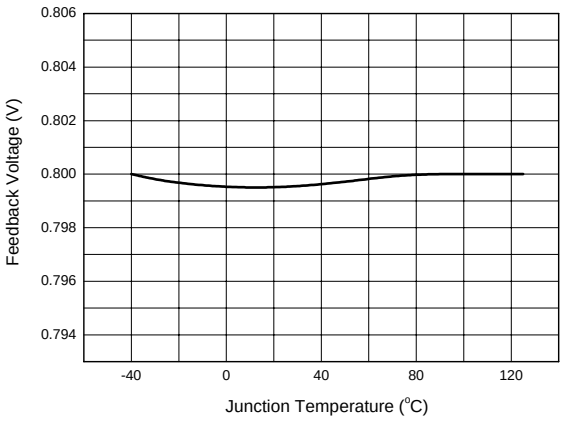

Figure 10. Feedback Voltage vs. Junction Temperature

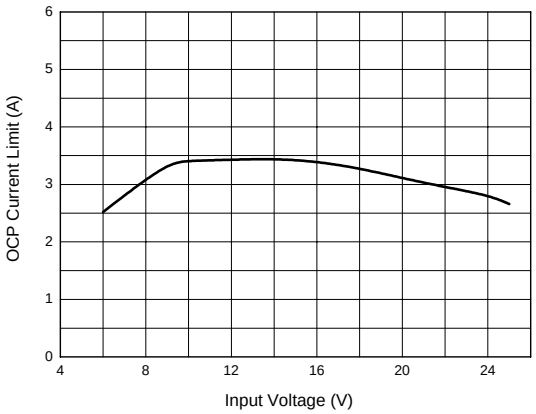

Figure 11. OCP Current Limit vs. Input Voltage

Typical Performance Characteristics (Continued)

V_{CC}=12V, V_{OUT}=5V, T_A=25℃, unless otherwise specified.

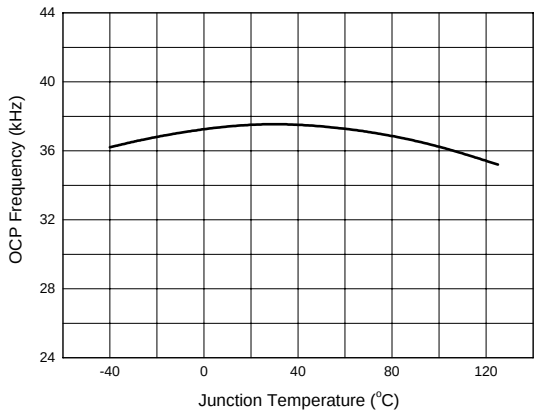

Figure 12. OCP Frequency vs. Junction Temperature

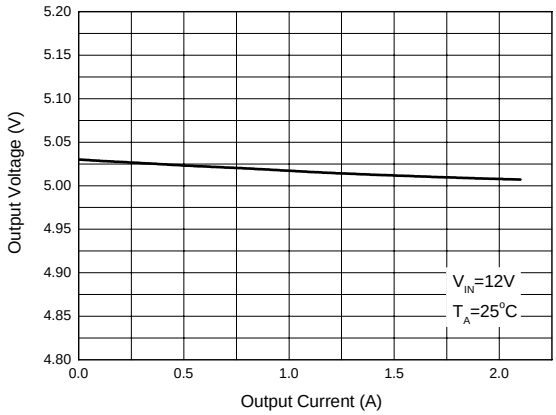

Figure 13. Output Voltage vs. Output Current

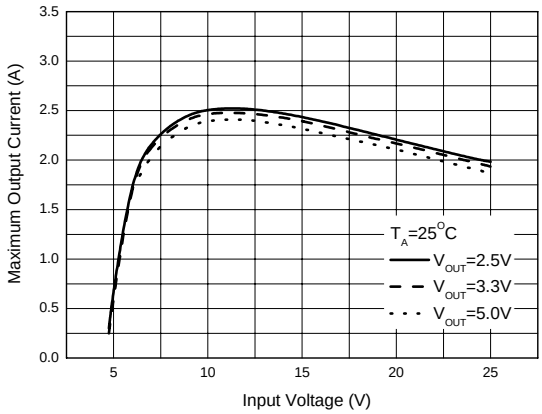

Figure 14. Maximum Output Current vs. Input Voltage

Typical Application

(V_{IN}=12V, V_{OUT} =5V, I_{OUT} =2A)

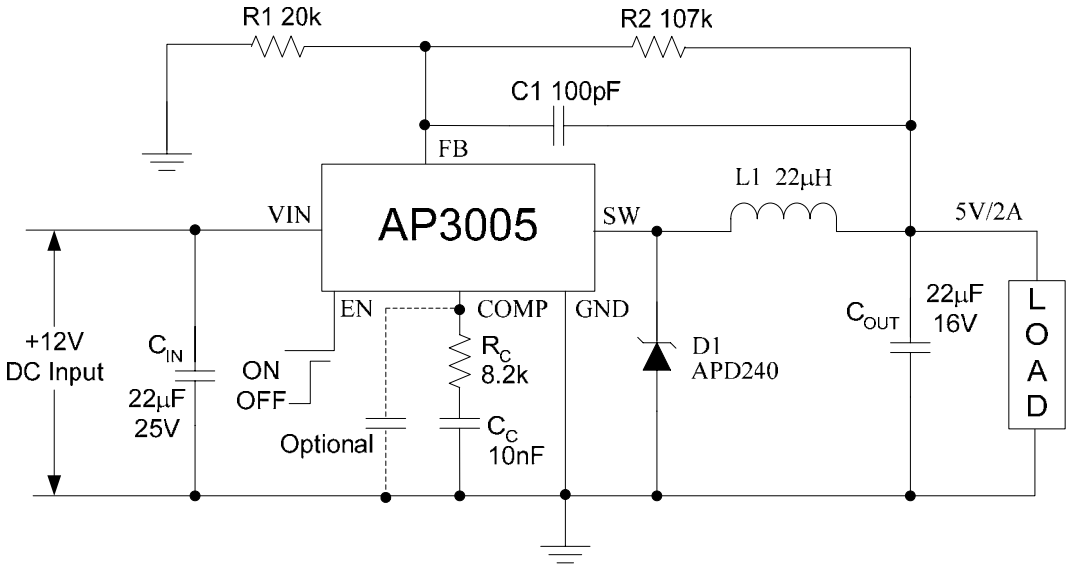

Figure 15. Typical Application 1 of AP3005 Applied with Ceramic Input and Output Capacitors

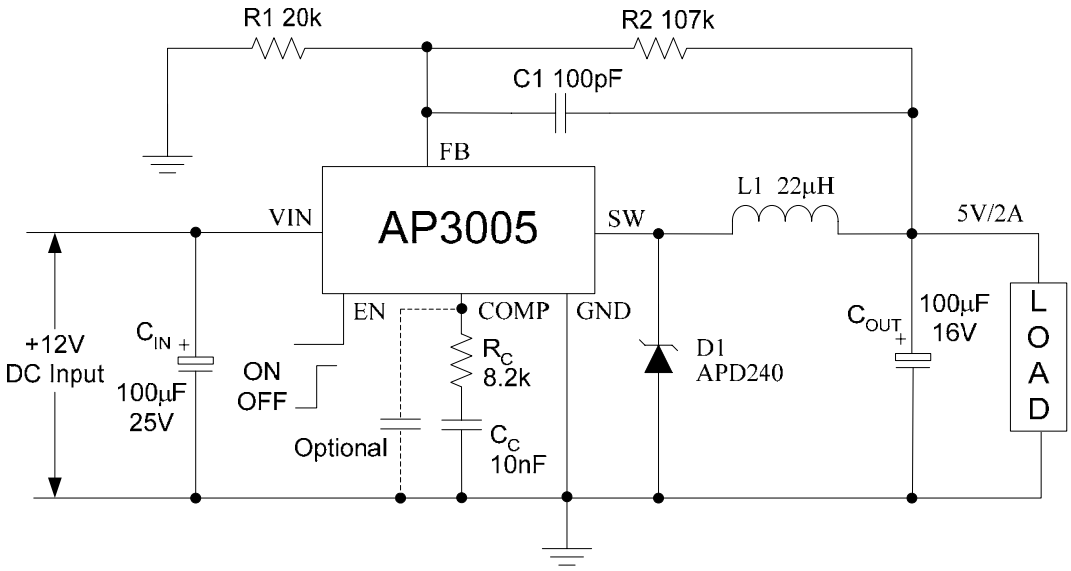

Figure 16. Typical Application 2 of AP3005 Applied with Electrolytic Input and Output Capacitors

Mechanical Dimensions

SOIC-8 **Unit: mm(inch)**

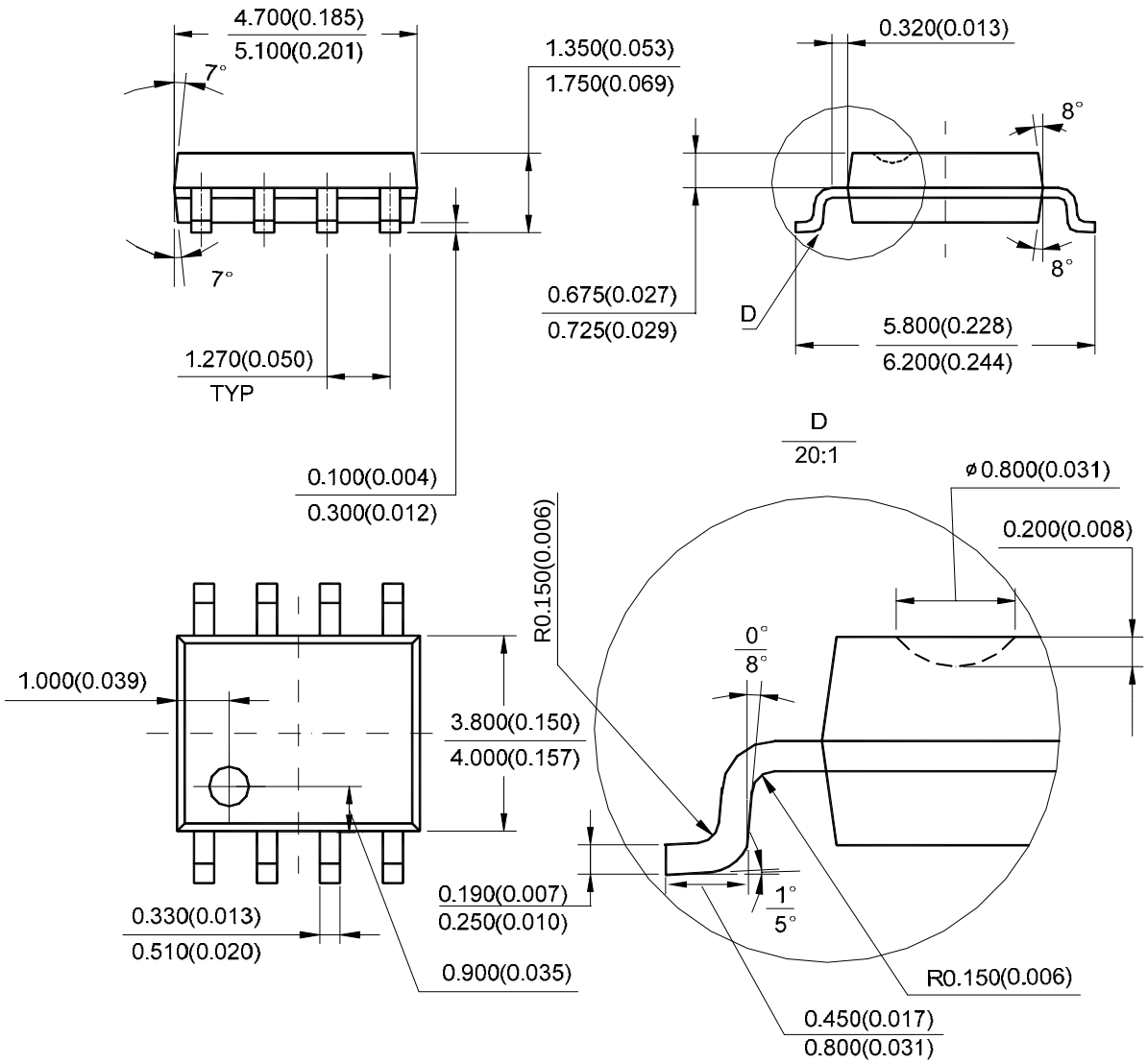

Note: Eject hole, oriented hole and mold mark is optional.



BCD Semiconductor Manufacturing Limited

http://www.bcdsemi.com

IMPORTANT NOTICE

BCD Semiconductor Manufacturing Limited reserves the right to make changes without further notice to any products or specifications herein. BCD Semiconductor Manufacturing Limited does not assume any responsibility for use of any its products for any particular purpose, nor does BCD Semiconductor Manufacturing Limited assume any liability arising out of the application or use of any its products or circuits. BCD Semiconductor Manufacturing Limited does not convey any license under its patent rights or other rights nor the rights of others.

MAIN SITE

- Headquarters
BCD Semiconductor Manufacturing Limited
No. 1600, Zi Xing Road, Shanghai ZiZhu Science-based Industrial Park, 200241, China
Tel: +86-21-24162266, Fax: +86-21-24162277

- Wafer Fab
Shanghai SIM-BCD Semiconductor Manufacturing Co., Ltd.
800 Yi Shan Road, Shanghai 200233, China
Tel: +86-21-6485 1491, Fax: +86-21-5450 0008

REGIONAL SALES OFFICE

Shenzhen Office
Shanghai SIM-BCD Semiconductor Manufacturing Co., Ltd., Shenzhen Office
Unit A Room 1203, Skyworth Bldg., Gaoxin Ave.1.S., Nanshan District, Shenzhen, China
Tel: +86-755-8826 7951
Fax: +86-755-8826 7865

Taiwan Office
BCD Semiconductor (Taiwan) Company Limited
4F, 298-1, Rui Guang Road, Nei-Hu District, Taipei, Taiwan
Tel: +886-2-2656 2808
Fax: +886-2-2656 2806

USA Office
BCD Semiconductor Corp.
30920 Huntwood Ave. Hayward, CA 94544, USA
Tel : +1-510-324-2988
Fax: +1-510-324-2788