AP138

300mA Low-Noise CMOS LDO

■ Features

- Very low dropout voltage
- Low current consumption: Typ.30μA, Max. 35μA
- Output voltage: 1.8V, 2.5V, 2.8V, 3.0V and 3.3V
- High accuracy output voltage: ±1.5%
- Guaranteed 300mA output
- Input range up to 7.0V
- Thermal shutdown
- Current limiting
- Stability with low ESR capacitors
- Factory pre-set output voltages
- Low temperature coefficient
- **Pb-free** package: SOT23-5L

■ Applications

- Battery-powered devices
- Personal communication devices
- Home electric/electronic appliances
- PC peripherals

■ General Descriptions

The AP138 is a positive voltage linear regulator utilizing CMOS technology. The features that include low quiescent current (30μA typ.), low dropout voltage, and high output voltage accuracy, make it ideal for battery applications. EN input connected to CMOS has low bias current. The space-saving SOT23-5L package is attractive for "Pocket" and "Hand Held" applications.

This rugged device has both thermal shutdown, and current limit protections to prevent device failure under the "Worst" operating conditions.

In a low noise, regulated supply application, a 1000pF capacitor is necessary to be placed in between Bypass and Ground.

The AP138 is stable with a low ESR output capacitor of 1.0μF or greater.

■ Pin Assignments

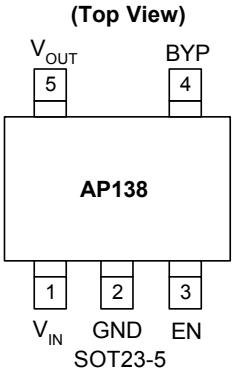

■ Pin Descriptions

Pin Name	Pin No.	Function
V_{IN}	1	Power Supply
GND	2	Ground
EN	3	Enable Pin
BYP	4	Bypass Signal Pin
V_{OUT}	5	Output

■ Ordering Information

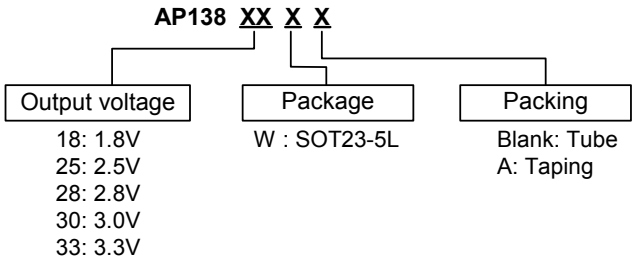

This datasheet contains new product information. Anachip Corp. reserves the rights to modify the product specification without notice. No liability is assumed as a result of the use of this product. No rights under any patent accompany the sale of the product.

■ Block Diagram

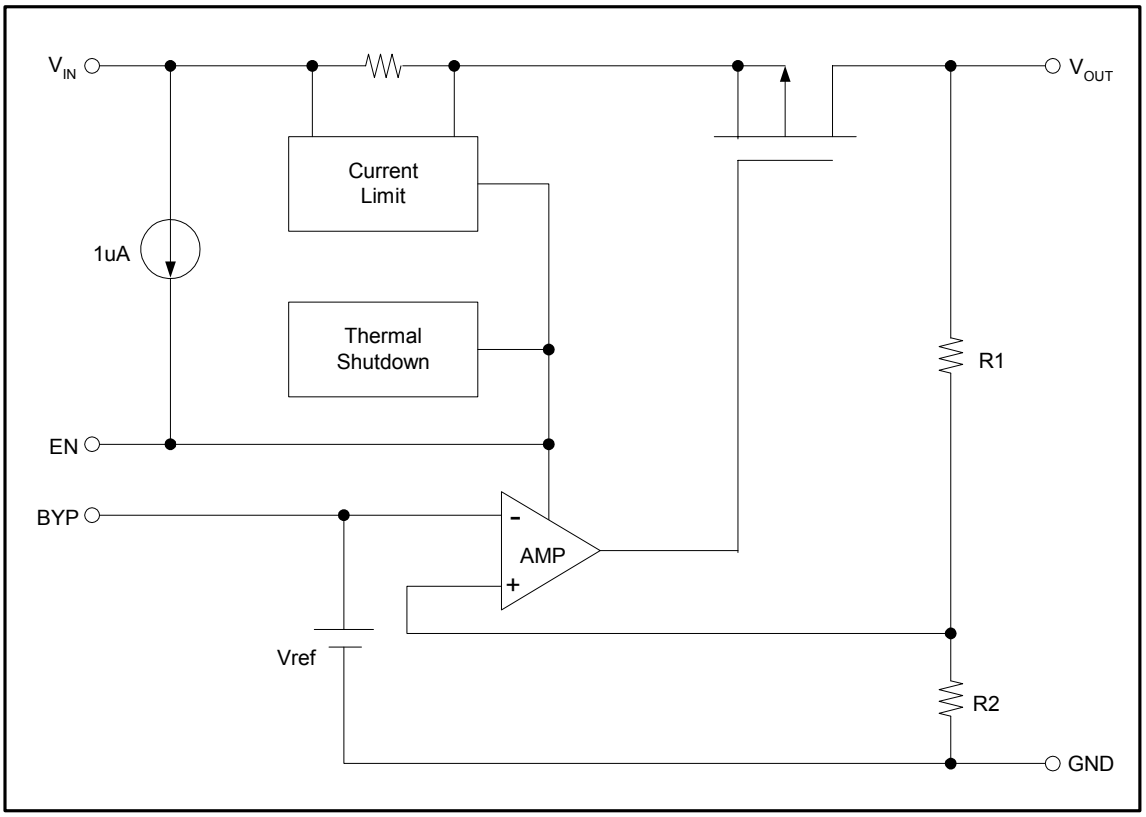

■ Absolute Maximum Ratings

Symbol	Parameter	Rating	Unit
V_{CC}	Input Voltage	+7	V
I_{OUT}	Output Current	$P_D/ (V_{IN}-V_O)$	mA
V_{OUT}	Output Voltage	GND - 0.3 to V_{IN}+ 0.3	V
	ESD Classification	B	
T_A	Ambient Temperature Range	-40 to +85	ºC
T_J	Junction Temperature Range	-40 to +125	ºC

■ Thermal Information

Symbol	Parameter		Maximum	Unit
θjc	Thermal Resistance	SOT23-5L	160	ºC/W
P_D	Internal Power Dissipation (ΔT=100 ºC)	SOT23-5L	250	mW
T_J	Maximum Junction Temperature		150	ºC
T_{Lead}	Maximum Lead Temperature (10 sec)		300	ºC

■ Electrical Characteristics

(T_A=+25ºC, unless otherwise noted.)

Symbol	Parameter	Test Conditions		Min.	Typ.	Max.	Unit
V_{IN}	Input Voltage			**Note 1**	-	7	V
V_{OUT}	Output Voltage Accuracy	I_O=1mA to 300mA		-1.5	-	1.5	%
$V_{DROPOUT}$	Dropout Voltage	I_O=1mA to 300mA, V_{OUT}=$V_{O(NOM)}$-1.5%	1.2V<$V_{O(NOM)}$ ≤ 2.0V	-	-	1300	mV
			2.0V<$V_{O(NOM)}$ ≤ 2.5V	-	-	800	
			2.5V<$V_{O(NOM)}$	-	-	300	
I_{OUT}	Output Current	V_{OUT} > 1.2V		300	-	-	mA
I_{LIMIT}	Current Limit	V_{OUT} > 1.2V		300	450	-	mA
I_Q	Quiescent Current	I_O=0mA		-	30	35	µA
I_{GND}	Ground Pin Current	I_O=1mA to 300mA		-	30	50	µA
REG_{LINE}	Line Regulation	I_{OUT}=5mA, V_{IN}=V_{OUT}+1 to V_{OUT}+2		-0.1	0.02	0.1	%
REG_{LOAD}	Load Regulation	I_O=1mA to 300mA		-	0.2	1	%
OTS	Over Temperature Shutdown			-	150	-	ºC
OTH	Over Temperature Hysteresis			-	30	-	ºC
TC	V_{OUT} Temperature Coefficient			-	40	-	ppm/ºC
PSRR	Power Supply Rejection	I_O=100mA, C_O=2.2µF ceramic	f=1KHz	-	60	-	dB
			f=10KHz	-	50	-	
			f=100KHz	-	40	-	
PSRR	Power Supply Rejection	I_O=100mA, C_O=2.2µF ceramic, C_{BYP}=0.01µF	f=1KHz	-	75	-	dB
			f=10KHz	-	55	-	
			f=100KHz	-	30	-	
eN	Output Voltage Noise	f=10Hz to 100kHz, I_O=10mA, C_{BYP}=0µF	C_O=2.2uF	-	30	-	µVrms
			C_O=100uF	-	20	-	
eN	Output Voltage Noise	f=10Hz to 100kHz, I_O=10mA, C_{BYP}=0.01µF	C_O=2.2uF	-	30	-	µVrms
			C_O=100uF	-	20	-	
I_{SD}	Shutdown Supply Current	V_{IN}=5.0V, V_{OUT}=0V, V_{EN} < V_{EL}		-	2.0	3.0	µA
I_{EH}	EN Input Bias Current	V_{EN}=V_{IN}, V_{IN}=2.6V to 7V		-	-	0.1	µA
I_{EL}		V_{EN}=0V, V_{IN}=2.6V to 7V		-	2.0	3.0	µA
V_{EH}	EN Input Threshold	V_{IN}=2.6V to 7V		2	-	V_{IN}	V
V_{EL}		V_{IN}=2.6V to 7V		0	-	0.4	V

Note 1. : $V_{IN(MIN)}$=V_{OUT}+$V_{DROPOUT}$

■ Typical Application

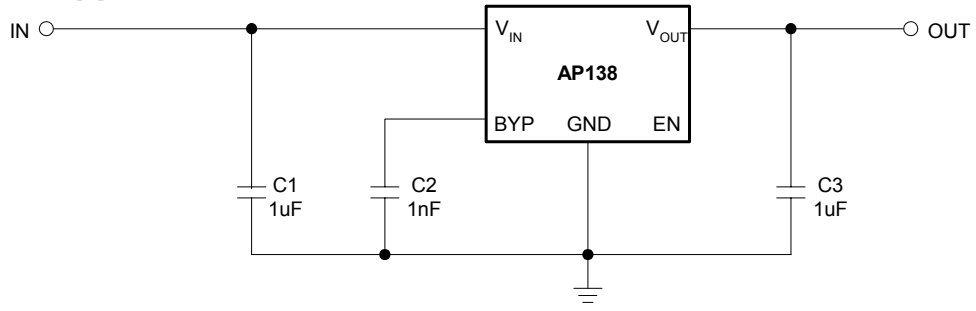

■ Typical Performance Characteristics

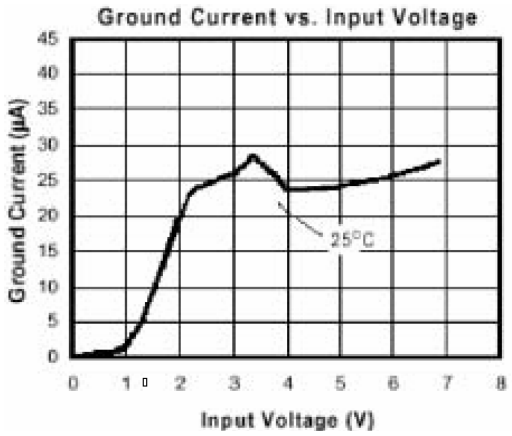

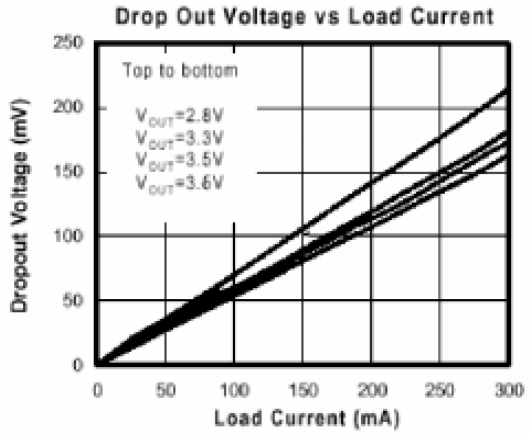

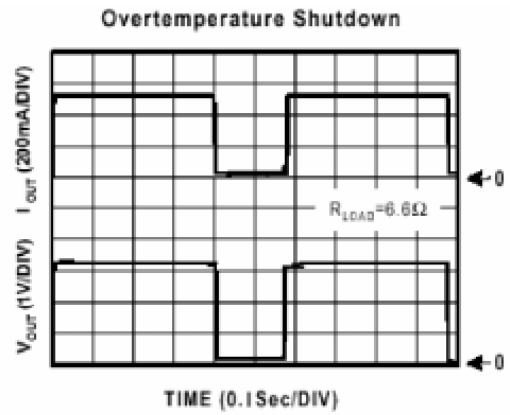

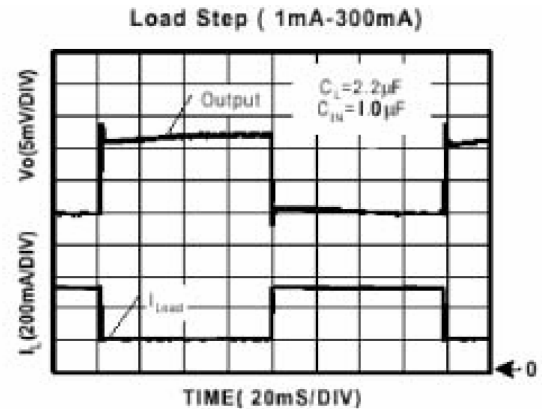

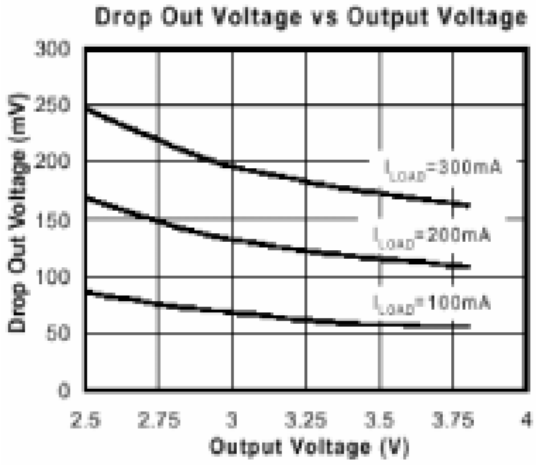

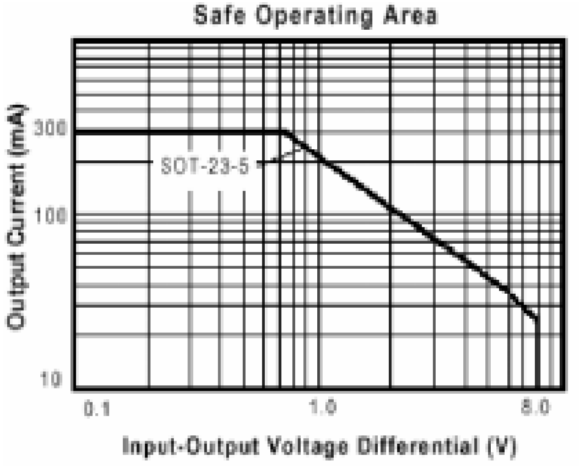

■ Typical Performance Characteristics (Continued)

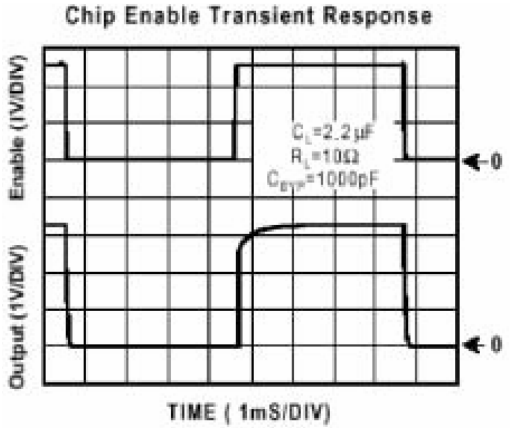

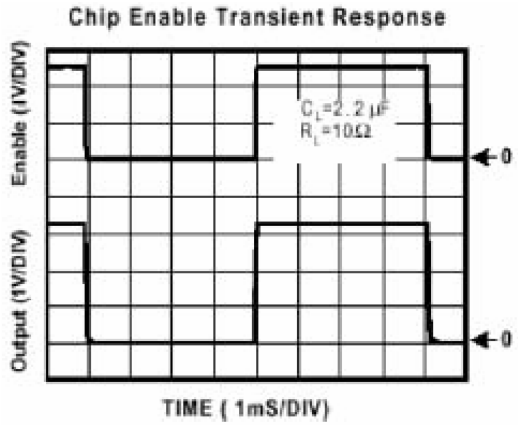

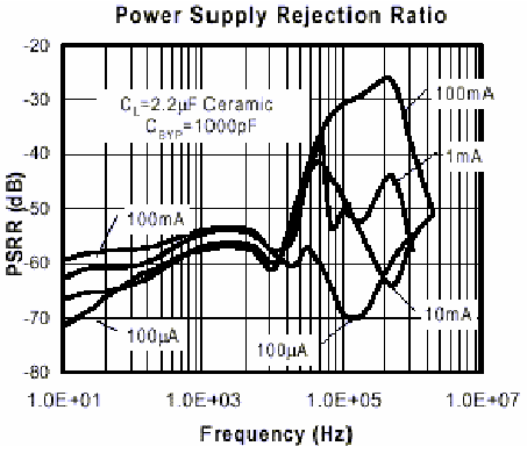

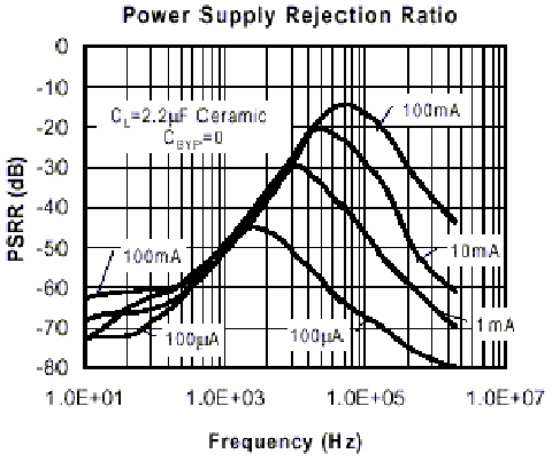

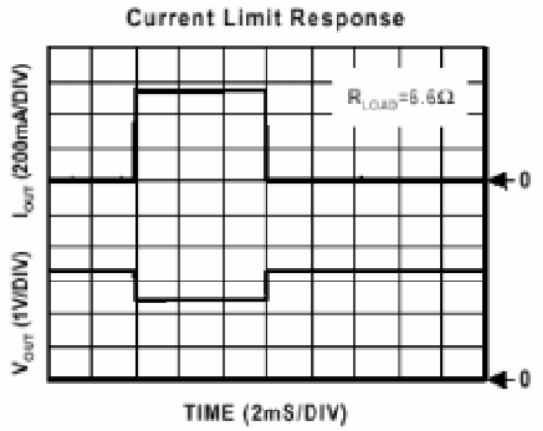

■ Function Description

The AP138 of CMOS regulators contain a PMOS pass transistor, voltage reference, error amplifier, over-current protection, thermal shutdown.

The P-channel pass transistor receives data from the error amplifier, over-current protection, and thermal protection circuits. During normal operation, the error amplifier compares the output voltage to a precision reference. Over-current and thermal shutdown circuits become active when the junction temperature exceeds 150°C, or the current exceeds 300mA. During thermal shutdown, the output voltage remains low. Normal operation is restored when the junction temperature drops below 120°C.

The AP138 switches from voltage mode to current mode when the load exceeds the rated output current. This prevents over-stress.

Enable
The enable pin normally floats high. When actively, pulled low, the PMOS pass transistor shut off, and all internal circuits are powered down. In this state, the quiescent current is less than 2μA. This pin behaves much like an electronic switch.

External Capacitor
The AP138 is stable with a low ESR output capacitor to ground of 1.0μF or greater. It can keep stable even with higher ESR capacitors. A second capacitor is recommended between the input and ground to stabilize VIN. The input capacitor should be larger than 0.1μF to have a beneficial effect. All capacitors should be placed in close proximity to the pins. A “quiet” ground termination is desirable.

■ Marking Information

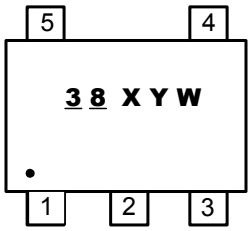

SOT23-5L

X : Identification code
(See Appendix)
Y : Year: 0-9
W : Week: A~Z: 01~26
a~z : 27~52
. : 53

Appendix

Identification Code	Output version
D	AP138-1.8V
K	AP138-2.5V
N	AP138-2.8V
P	AP138-3.0V
S	AP138-3.3V

■ Package Information

Package Type: SOT23-5L

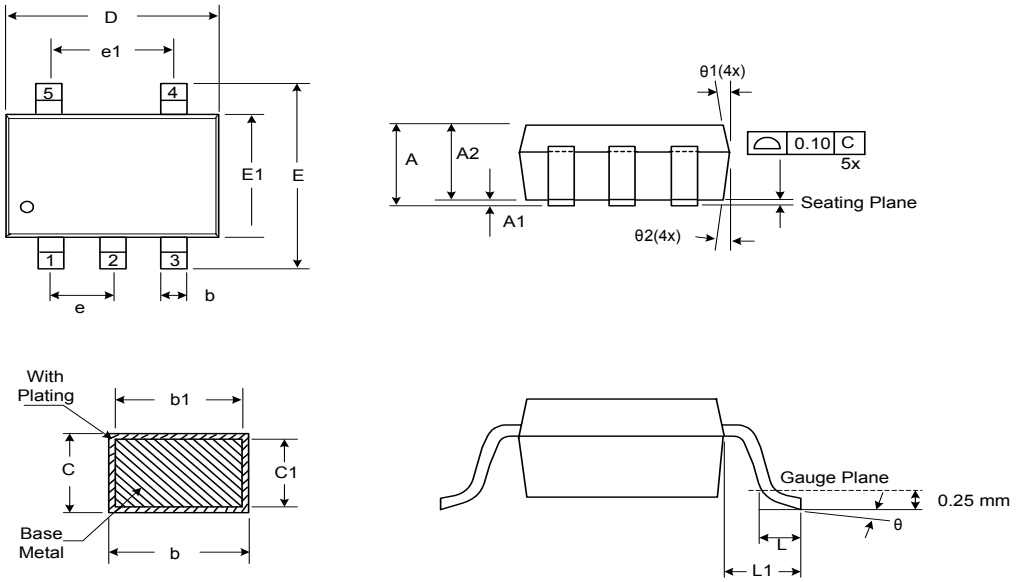

Symbol	Dimensions In Millimeters			Dimensions In Inches		
	Min.	Nom.	Max.	Min.	Nom.	Max.
A	1.05	1.20	1.35	0.041	0.047	0.053
A1	0.05	0.10	0.15	0.002	0.004	0.006
A2	1.00	1.10	1.20	0.039	0.043	0.047
b	0.25	-	0.55	0.010	-	0.022
b1	0.25	0.40	0.45	0.010	0.016	0.018
c	0.08	-	0.20	0.003	-	0.008
c1	0.08	0.11	0.15	0.003	0.004	0.006
D	2.70	2.85	3.00	0.106	0.112	0.118
E	2.60	2.80	3.00	0.102	0.110	0.118
E1	1.50	1.60	1.70	0.059	0.063	0.067
L	0.35	0.45	0.55	0.014	0.018	0.022
L1	0.60 Ref.			0.024 Ref.		
e	0.95 Bsc.			0.037 Bsc.		
e1	1.90 Bsc.			0.075 Bsc.		
θ	0°	5°	10°	0°	5°	10°
θ1	3°	5°	7°	3°	5°	7°
θ2	6°	8°	10°	6°	8°	10°