Features

- 1.3V maximum dropout at full load current
- Fast transient response
- Output current limiting for each channel
- Built-in thermal shutdown each channel
- Good noise rejection
- Dual output ch1=3.3V, ch2=2.5V (1.8V for B version)
- Lead Free Package: SOP-8L
- Lead Free Finish/ RoHS Compliant (Note 1)

General Description

AP1120 series are low dropout positive regulator to provide 1A output current capability. The product is specifically designed to provide well-regulated supply for low voltage IC applications such as high-speed bus termination and low current 3.3V/2.5V or 3.3V/1.8V logic supply. AP1120 series are guaranteed to have <1.3V dropout at full load current making it ideal to provide well regulated outputs dual channels with up to 18V input supply.

Applications

- PC peripheral
- Communication

Ordering Information

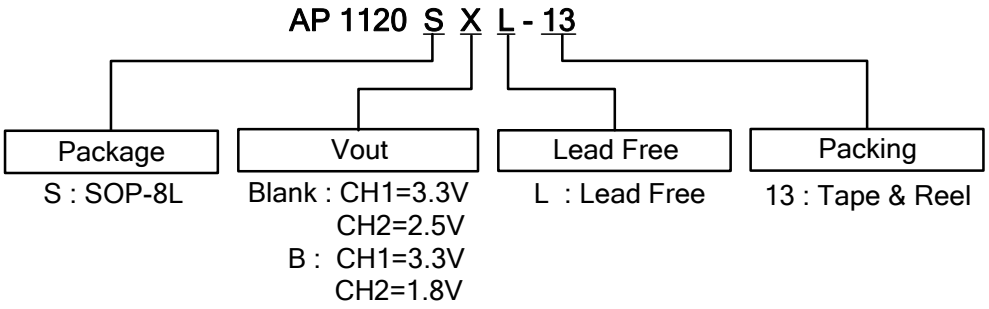

Device	Package Code	Packaging (Note 2)	13" Tape and Reel	
			Quantity	Part Number Suffix
AP1120SXL-13	S	SOP-8L	2500/Tape & Reel	-13

Notes: 1. EU Directive 2002/95/EC (RoHS). All applicable RoHS exemptions applied. Please visit our website at http://www.diodes.com/products/lead_free.html.
2. Pad layout as shown on Diodes Inc. suggested pad layout document AP02001, which can be on found our website at http://www.diodes.com/datasheets/ap02001.pdf.

© Diodes Incorporated

Pin Assignments

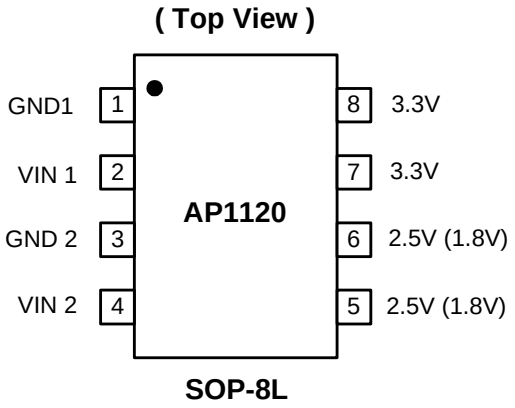

Pin Descriptions

Pin Name	Description
GND1/2	Ground
3.3V (Vout1) 2.5V/1.8V (Vout2)	The output of the regulator. A minimum of 10uF capacitor (0.15Ω ≤ ESR ≤ 20Ω) must be connected from this pin to ground to insure stability.
VIN1/2	The input pin of regulator. Typically a large storage capacitor (0.15Ω ≤ ESR ≤ 20Ω) is connected from this pin to ground.

© Diodes Incorporated

Block Diagram

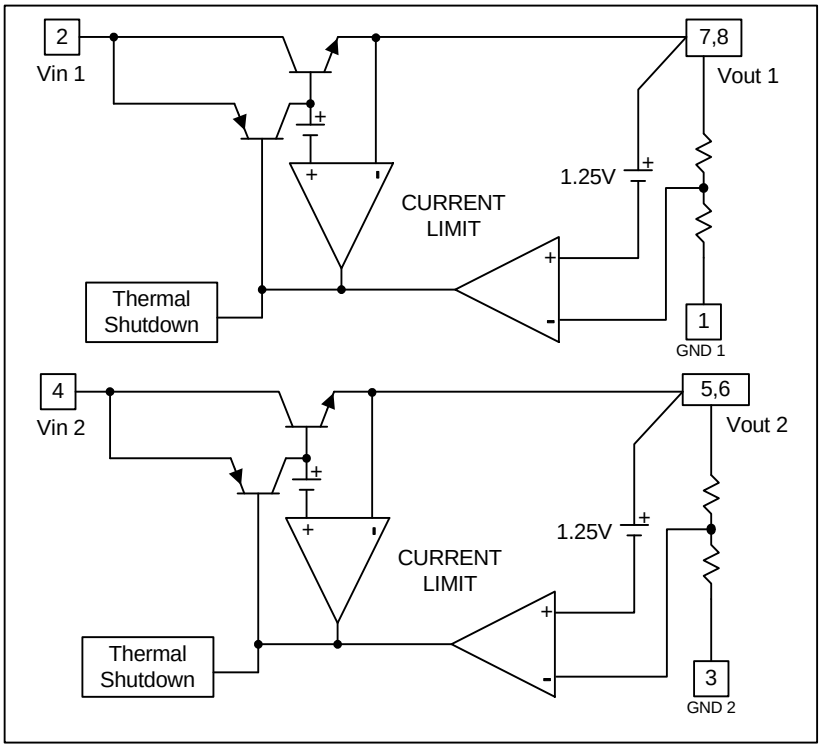

Typical Circuit

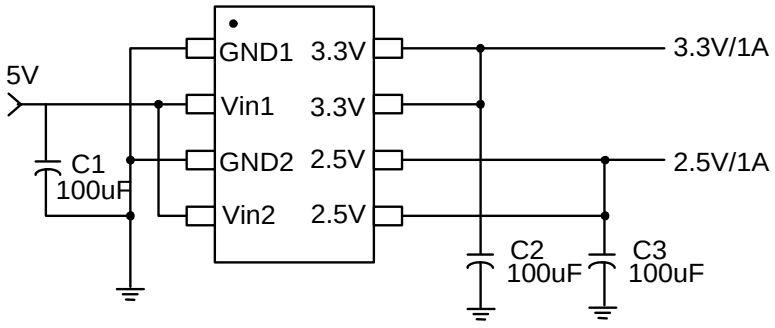

(3.3V/2.5V Dual output)

© Diodes Incorporated

Absolute Maximum Ratings

Symbol	Parameter	Rating	Unit
V_{IN}	DC Supply Voltage	-0.3 to 18 V	V
P_D	Power Dissipation	Internally Limited	
T_{ST}	Storage Temperature	-65 to +150	^oC
T_{OP}	Operating Junction Temperature Range	0 to +150	^oC

Electrical Characteristics (Under Operating Conditions)

Parameter	Conditions		Min	Typ.	Max	Unit
Output Voltage	AP1120(B) - V_{OUT1}	I_{OUT} = 10mA, T_A = 25°C, 4.8V≦V_{IN}≦12V	3.235	3.300	3.365	V
	AP1120 - V_{OUT2}	I_{OUT} = 10mA, T_A = 25°C, 4V≦V_{IN}≦12V	2.450	2.500	2.550	V
	AP1120B - V_{OUT2}	I_{OUT} = 10mA, T_A = 25°C, 4V≦V_{IN}≦12V	1.764	1.800	1.836	V
Line Regulation	I_O=10mA,V_{OUT}+1.5V<V_{IN}<12V, T_A =25°C				0.2	%
Load Regulation	AP1120 series V_{OUT1}	V_{IN} = 5V, 0≦I_{OUT}≦1A, T_A =25°C (Note 3, 4)		26	33	mV
	AP1120 series V_{OUT2}	V_{IN}=4V, 0mA<Io<1A, T_A =25°C (Note 3, 4)		20	25	mV
Dropout Voltage (V_{IN}-V_{OUT})	I_{OUT} = 1A,ΔV_{OUT}=0.1%V_{OUT}			1.3	1.4	V
Current Limit	(V_{IN}-V_{OUT}) = 5V		1. 1			A
Minimum Load Current	0°C≦Tj≦125°C (Note 5)			5	10	mA
Thermal Regulation	T_A=25 °C, 30ms pulse			0.008	0.04	%/W
Ripple Rejection	F=120Hz,C_{OUT}=25uF Tantalum, I_{OUT}=1A			60	70	dB
Temperature Stability	I_O=10mA			0.5		%
θ_{JA} Thermal Resistance Junction-to-Ambient (No heat sink; No air flow)	SOP-8L: Control Circuitry/Power Transistor (Note 6) CH1 or CH2 only CH1 & CH2 and PD1=PD2			 50 45		°C/W
θ_{JC} Thermal Resistance Junction-to-Case	SOP-8L: Control Circuitry/Power Transistor (Note 6) CH1 or CH2 only CH1 & CH2 and PD1=PD2			 20 12		°C/W

Notes: 3. See thermal regulation specifications for changes in output voltage due to heating effects. Line and load regulation are measured at a constant junction temperature by low duty cycle pulse testing. Load regulation is measured at the output lead = 1/18" from the package.
4. Line and load regulation are guaranteed up to the maximum power dissipation of 15W. Power dissipation is determined by the input/output differentially and the output current. Guaranteed maximum power dissipation will not be available over the full input/output range.
5. Quiescent current is defined as the minimum output current that requires maintaining regulation. At 12V input/output differential the device is guaranteed to regulate if the output current is greater than 10mA.
6. Vout1 and Vout2 are connected to the PCB copper area 5.5mm*5.5mm separately. If you need large PD or lower Tc & Tj, please connect to the large copper area >> 5.5mm*5.5mm (like 10mm*10mm).

© Diodes Incorporated

Typical Performance Characteristics

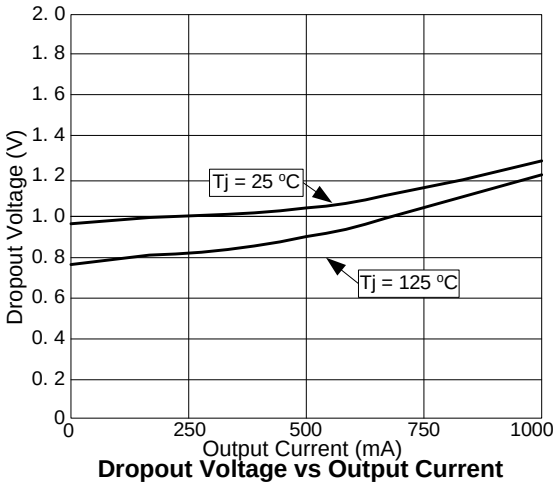

Dropout Voltage vs Output Current

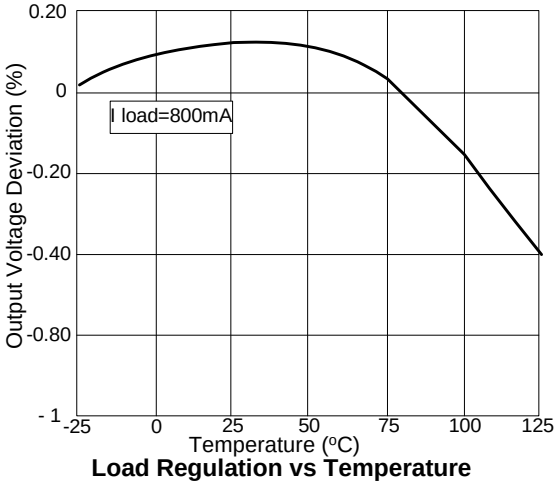

Load Regulation vs Temperature

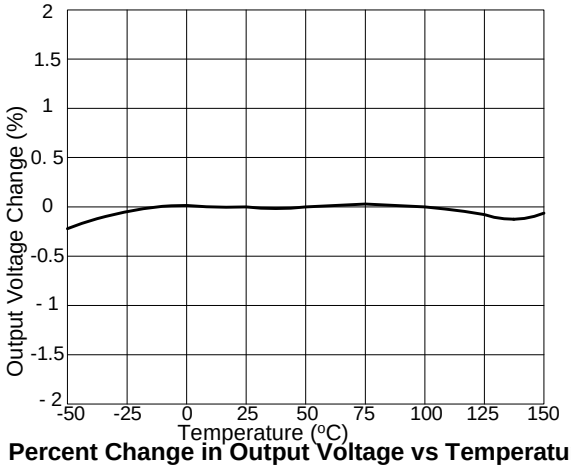

Percent Change in Output Voltage vs Temperature

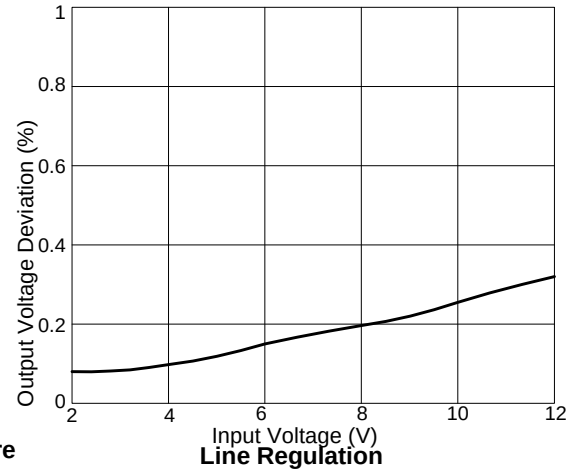

Line Regulation

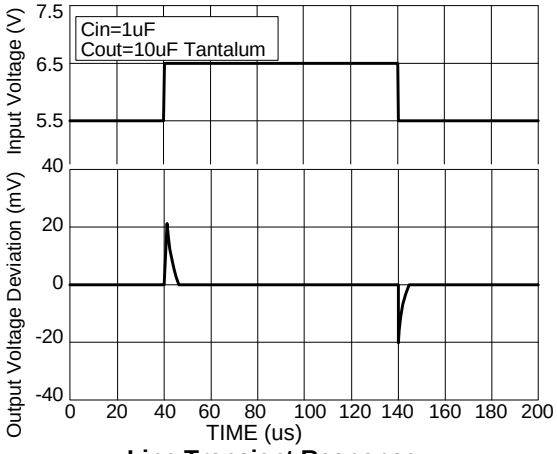

Line Transient Response

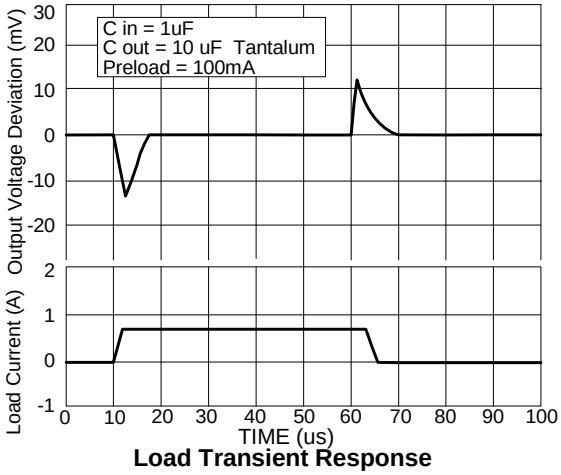

Load Transient Response

© Diodes Incorporated

Marking Information

(1) SOP-8L

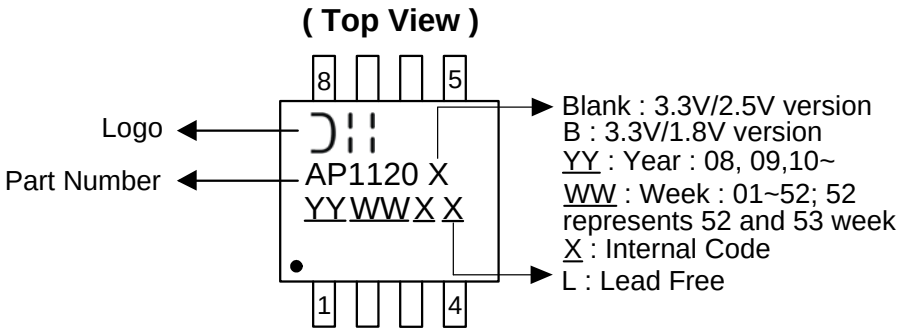

Package Information (All Dimensions in mm)

(1) Package type: SOP-8L

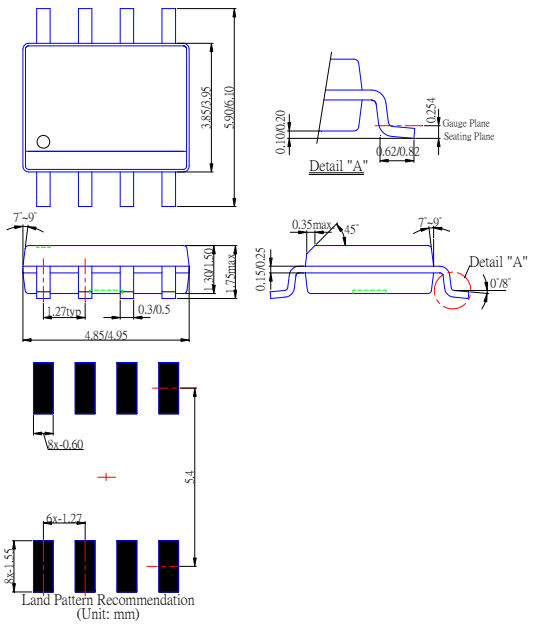

© Diodes Incorporated

IMPORTANT NOTICE

Diodes Incorporated and its subsidiaries reserve the right to make modifications, enhancements, improvements, corrections or other changes without further notice to any product herein. Diodes Incorporated does not assume any liability arising out of the application or use of any product described herein; neither does it convey any license under its patent rights, nor the rights of others. The user of products in such applications shall assume all risks of such use and will agree to hold Diodes Incorporated and all the companies whose products are represented on our website, harmless against all damages.

LIFE SUPPORT

Diodes Incorporated products are not authorized for use as critical components in life support devices or systems without the expressed written approval of the President of Diodes Incorporated.

© Diodes Incorporated