ARCH ELECTRONICS CORP.

AC-DC Power Module

AOC SERIES 4 Watts

KEY FEATURES

- Switching Power Module for PCB Mountable
- Fully Encapsulated Plastic Case
- Universal Input Range 90-264VAC, 47-440 Hz
- Single and Dual Output
- Low Ripple and Noise
- Isolation Class II
- Maximum No-Load Watts < 0.3W
- CE , UL Approval
- 2-Years Product Warranty



E199779 LEVEL3

ELECTRICAL SPECIFICATIONS

Model No. (Single Output)		AOC-3.3S	AOC-5S	AOC-8S	AOC-9S	AOC-12S	AOC-14S	AOC-15S	AOC-24S
Max Output Wattage (W)		3.96W	4W	4W	4W	4W	4W	4W	4W
Input	Voltage	90-264 VAC or 120-370 VDC							
	Frequency (Hz)	47-440 Hz							
	Current (Full load)	75 mA max. (115 VAC) / 55 mA max. (230 VAC)							
	Inrush Current (<500us)	15 A max. (115 VAC) / 25 A max. (230 VAC)							
	Leakage Current	0.3 mA max.							
	External Fuse (recommend)	1 A slow blow type							
Output	Voltage (V.DC.)	3.3V	5V	8V	9V	12V	14V	15V	24V
	Voltage Accuracy	±2%							
	Current (mA) max	1200	800	500	444	333	286	267	167
	Line Regulation (LL-HL) (typ.)	±0.2%							
	Load Regulation (0-100%) (typ.)	±1%.				±0.5%.			
	Minimum Load	0%							
	Maximum Capacitive Load	14000uF	8000uF	2700uF	2400uF	1000uF	750uF	700uF	220uF
	Ripple	3.3S~15S : <100mV max (Vp-p) 24S : <150mV max (Vp-p)							
	Noise	3.3S~15S : <150mV max (Vp-p) 24S : <200mV max (Vp-p)							
	Efficiency	70%	72%	76%	76%	76%	76%	76%	77%
	Hold-up Time	15 ms min.							
	Switching Frequency	132±8 KHz							
Protection	Over Power Protection	Hiccup technique, auto-recovery							
	Over Voltage Protection	Zener diode clamp							
	Short Circuit Protection	Hiccup mode, indefinite (automatic recovery)							
Isolation	Input-Output (V.AC)	3000V							
Environment	Operating Temperature	-40°C…+70°C (with derating)							
	Storage Temperature	-40°C…+125°C							
	Temperature Coefficient	±0.02%/°C							
	Humidity	95% RH							
	MTBF	>350,000 h @ 25°C (MIL-HDBK-217F)							
Physical	Dimension (L x W x H)	1.44 x 1.07 x 0.67 Inches (36.66 x 27.16 x 17.1 mm) Tolerance ±0.5 mm							
	Case Material	Plastic resin with Fiberglass (flammability to UL 94V-0)							
	Weight	26 g							
	Cooling Method	Free air convection							
Safety	Agency Approvals	UL , cUL , CE							
EMC	EMI (Conducted & Radiated Emission)	EN 55022 class B							
	EMS (Noise Immunity)	EN 55024							

All specifications valid at nominal input voltage, full load and +25°C after warm-up time unless otherwise stated.

AOC SERIES 4 Watts

ELECTRICAL SPECIFICATIONS

Model No. (Dual Output)		AOC-5S3.3S	AOC-8S5S	AOC-12S5S
Max Output Wattage (W)		3.5W	3.6W	3.6W
Input	Voltage	90-264 VAC or 120-370 VDC		
	Frequency (Hz)	47-440 Hz		
	Current (Full load)	85 mA max. (115 VAC) / 65 mA max. (230 VAC)		
	Inrush Current (<500us)	15 A max. (115 VAC) / 25 A max. (230 VAC)		
	Leakage Current	0.3 mA max.		
	External Fuse (recommend)	1 A slow blow type		
Output	Voltage (V.DC.)	Vo : 5V Vr : 3.3V	Vo : 8V Vr : 5V	Vo : 12V Vr : 5V
	Voltage Accuracy	Vo : ±2% Vr : ±5%		
	Current (mA) max	600 / 150	375 / 120	250 / 120
	Line Regulation (LL-HL) (typ.)	Vo : ±0.2% Vr : ±3%		
	Load Regulation (0-100%) (typ.)	Vo : ±0.5% Vr : ±5%		
	Minimum Load	0%		Vo : 0% Vr : 1%
	Maximum Capacitive Load	Vo : 5600uF Vr : 4700uF	Vo : 1000uF Vr :4700uF	Vo : 330uF Vr : 4700uF
	Ripple	<100mV max (Vp-p)		
	Noise	<150mV max (Vp-p)		
	Efficiency	73%	76%	77%
	Hold-up Time	15 ms min.		
	Switching Frequency	132±8 KHz		
Protection	Over Power Protection	Hiccup technique, auto-recovery		
	Over Voltage Protection	Zener diode clamp		
	Short Circuit Protection	Hiccup mode, indefinite (automatic recovery)		
Isolation	Input-Output (V.AC)	3000V		
Environment	Operating Temperature	-40°C…+70°C (with derating)		
	Storage Temperature	-40°C…+125°C		
	Temperature Coefficient	±0.02%/°C		
	Humidity	95% RH		
	MTBF	>350,000 h @ 25°C (MIL-HDBK-217F)		
Physical	Dimension (L x W x H)	1.44 x 1.07 x 0.67 Inches (36.66 x 27.16 x 17.1 mm) Tolerance ±0.5 mm		
	Case Material	Plastic resin with Fiberglass (flammability to UL 94V-0)		
	Weight	26 g		
	Cooling Method	Free air convection		
Safety	Agency Approvals	UL , cUL , CE		
EMC	EMI (Conducted & Radiated Emission)	EN 55022 class B		
	EMS (Noise Immunity)	EN 55024		

All specifications valid at nominal input voltage, full load and +25°C after warm-up time unless otherwise stated.

Vo : Measured with 47μF 25V Ceramic Cap. Cross to output.

AOC SERIES 4 Watts

MECHANICAL DIMENSION (Top View)

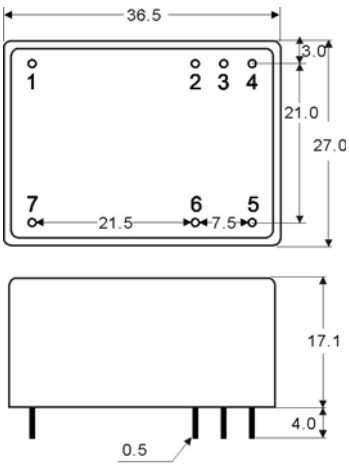

Tolerance ±0.5 mm

PIN#	Single	Dual
1	NC	NC
2	+Vo	+Vo
3	GND	COM
4	NC	+Vr
5	AC IN (L)	AC IN (L)
6	AC IN (N)	AC IN (N)
7	NC	NC

BLOCK DIAGRAM

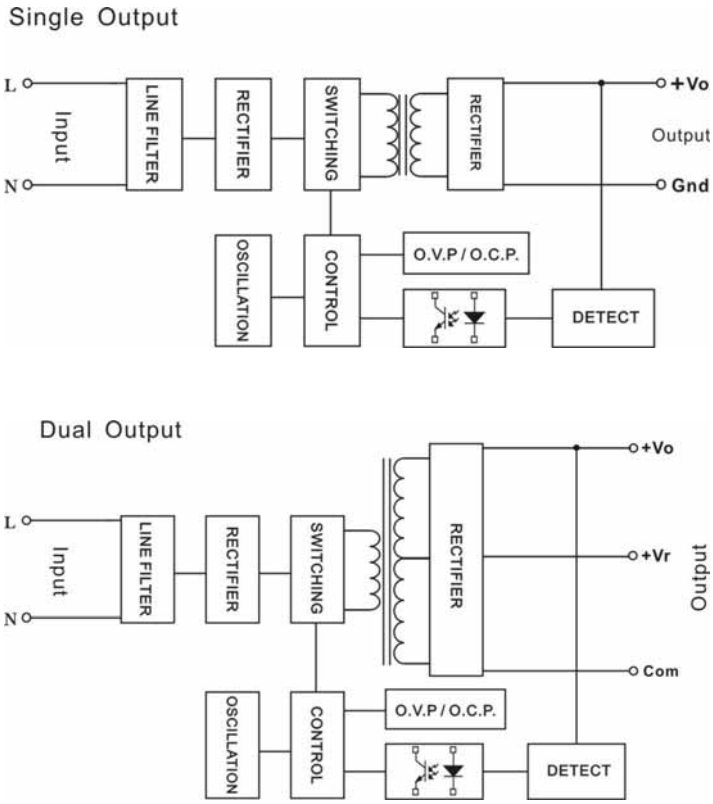

DERATING

