ARCH ELECTRONICS CORP.

AC-DC Power Module

# ANC A SERIES 15 Watts

## KEY FEATURES

- Switching Power Module for PCB Mountable
- Fully Encapsulated Plastic Case
- Universal Input Range 90-264VAC, 47-440 Hz
- Regulated Output
- Low Ripple and Noise
- Screw Terminal For Optional
- CE, UL, TUV Approval
- 3-Years Product Warranty




E199779 LEVEL3

BAUART GEPRUFT TYPE APPROVED

## ELECTRICAL SPECIFICATIONS

| Model No. ( Single Output ) | | ANC-5S A | ANC-12S A | ANC-15S A | ANC-24S A |
|---|---|---|---|---|---|
| Max Output Wattage (W) | | 15W | 15W | 15W | 15W |
| Input | Voltage | 90-264 VAC or 120-370 VDC | | | |
| | Frequency (Hz) | 47-440 Hz | | | |
| | Current (Full load) | 310 mA max. (115 VAC) / 170 mA max. (230 VAC) | | | |
| | Inrush Current (<2ms) | 10 A max. (115 VAC) / 20 A max. (230 VAC) | | | |
| | Leakage Current | 0.75 mA max. | | | |
| | External Fuse (recommend) | 1.5 A slow blow type | | | |
| Output | Voltage (V.DC.) | 5V | 12V | 15V | 24V |
| | Voltage Accuracy | ±2% | | | |
| | Current (mA) max | 3000 | 1250 | 1000 | 625 |
| | Line Regulation (LL-HL) (typ.) | ±0.5% | | | |
| | Load Regulation (5-100%) (typ.) | ±0.5% | | | |
| | Minimum Load | 4% | 2% | 0% | 0% |
| | Maximum Capacitive Load | 31000 uF | 4500 uF | 2700 uF | 900 uF |
| | Ripple | <0.2% Vout +40mV max (Vp-p) | | | |
| | Noise | <0.5% Vout +50mV max (Vp-p) | | | |
| | Efficiency | 74% | 79% | 78% | 80% |
| | Hold-up Time | 15 ms min. | | | |
| | Switching Frequency | 100 kHz | | | |
| Protection | Over Power Protection | Hiccup technique, auto-recovery | | | |
| | Over Voltage Protection | Zener diode clamp | | | |
| | Short Circuit Protection | Hiccup mode, indefinite (automatic recovery) | | | |
| Isolation | Input-Output (V.AC) | 3000V | | | |
| | Input-FG (V.AC) | 1500V | | | |
| | Output-FG (V.AC) | 500V | | | |
| Environment | Operating Temperature | -25°C…+70°C (with derating) | | | |
| | Storage Temperature | -40°C…+85°C | | | |
| | Temperature Coefficient | ±0.02%/°C | | | |
| | Humidity | 95% RH | | | |
| | MTBF | >200,000 h @ 25°C (MIL-HDBK-217F) | | | |
| Physical | Dimension (L x W x H) | 2.91 x 2.13 x 0.87 Inches ( 74.0 x 54.0 x 22.0 mm ) Tolerance ±0.5 mm | | | |
| | Case Material | Plastic resin with Fiberglass (flammability to UL 94V-0) | | | |
| | Weight | 114 g | | | |
| | Cooling Method | Free air convection | | | |
| Safety | Agency Approvals | UL/cUL, CE, TUV | | | |
| EMC | EMI (Conducted & Radiated Emission) | EN 55022 class B | | | |
| | EMS (Noise Immunity) | EN 55024 | | | |

1.All specifications valid at normal input voltage, full load and +25°C after warm-up time unless otherwise stated.

2.Ripple & Noise are measured at 20MHz of bandwidth with 0.1UF & 47UF parallel capacitor.

# ANC A SERIES 15 Watts

## ELECTRICAL SPECIFICATIONS

| Model No. ( Dual、Triple Output ) | | ANC-5D A | ANC-12D A | ANC-15D A | ANC-5S12D A | ANC-5S15D A |
|---|---|---|---|---|---|---|
| Max Output Wattage (W) | | 15W | 15W | 15W | 15W | 15W |
| Input | Voltage | 90-264 VAC or 120-370 VDC | | | | |
| | Frequency (Hz) | 47-440 Hz | | | | |
| | Current (Full load) | 310 mA max. (115 VAC) / 170 mA max. (230 VAC) | | | | |
| | Inrush Current (<2ms) | 10 A max. (115 VAC) / 20 A max. (230 VAC) | | | | |
| | Leakage Current | 0.75 mA max. | | | | |
| | External Fuse (recommend) | 1.5 A slow blow type | | | | |
| Output | Voltage (V.DC.) | ±5V | ±12V | ±15V | 5/±12 | 5/±15 |
| | Voltage Accuracy | ±5% | | | ±3% | |
| | Current (mA) max | ±1500 | ±650 | ±500 | 2000/±200 | 2000/±150 |
| | Line Regulation (LL-HL) (typ.) | ±0.5% | | | ±1% / ±5% | |
| | Load Regulation (5-100%) (typ.) | ±3% | | | ±2% / ±5% | |
| | Minimum Load | 0% | | | 5V 10% (200 mA) | |
| | Maximum Capacitive Load | ±13500 uF | ±2700 uF | ±1400 uF | 14000 / ±900 uF | 14000 / ±680 uF |
| | Ripple | <0.2% Vout +40mV max (Vp-p) | | | | |
| | Noise | <0.5% Vout +50mV max (Vp-p) | | | | |
| | Efficiency | 76% | 79% | 77% | 73% | 73% |
| | Hold-up Time | 15 ms min. | | | | |
| | Switching Frequency | 100 kHz | | | | |
| Protection | Over Power Protection | Hiccup technique, auto-recovery | | | | |
| | Over Voltage Protection | Zener diode clamp | | | | |
| | Short Circuit Protection | Hiccup mode, indefinite (automatic recovery) | | | | |
| Isolation | Input-Output (V.AC) | 3000V | | | | |
| | Input-FG (V.AC) | 1500V | | | | |
| | Output-FG (V.AC) | 500V | | | | |
| Environment | Operating Temperature | -25°C…+70°C (with derating) | | | | |
| | Storage Temperature | -40°C…+85°C | | | | |
| | Temperature Coefficient | ±0.02%/°C | | | | |
| | Humidity | 95% RH | | | | |
| | MTBF | >200,000 h @ 25°C (MIL-HDBK-217F) | | | | |
| Physical | Dimension (L x W x H) | 2.91 x 2.13 x 0.87 Inches ( 74.0 x 54.0 x 22.0 mm ) Tolerance ±0.5 mm | | | | |
| | Case Material | Plastic resin with Fiberglass (flammability to UL 94V-0) | | | | |
| | Weight | 114 g | | | | |
| | Cooling Method | Free air convection | | | | |
| Safety | Agency Approvals | UL/cUL, CE, TUV | | | | |
| EMC | EMI (Conducted & Radiated Emission) | EN 55022 class B | | | | |
| | EMS (Noise Immunity) | EN 55024 | | | | |

1.All specifications valid at normal input voltage, full load and +25°C after warm-up time unless otherwise stated.

2.Ripple & Noise are measured at 20MHz of bandwidth with 0.1UF & 47UF parallel capacitor.

## ANC A SERIES 15 Watts

## MECHANICAL DIMENSION ( Top View )

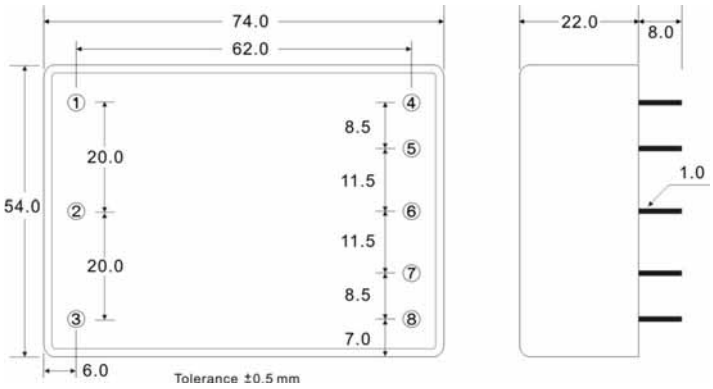


| PIN# | SINGLE | Dual | Triple |
|---|---|---|---|
| 1 | FG | FG | FG |
| 2 | AC IN (N) | AC IN (N) | AC IN (N) |
| 3 | AC IN (L) | AC IN (L) | AC IN (L) |
| 4 | NO PIN | NO PIN | -DC OUT |
| 5 | -DC OUT | -DC OUT | COMMON |
| 6 | NO PIN | COMMON | +DC OUT |
| 7 | +DC OUT | +DC OUT | +5V RTN |
| 8 | NO PIN | NO PIN | +5V OUT |

## BLOCK DIAGRAM

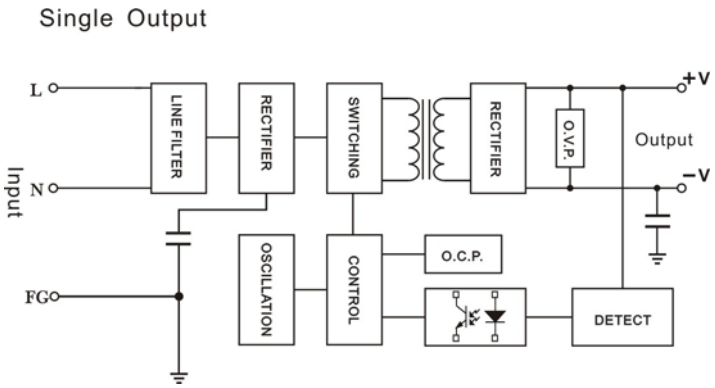


## DERATING

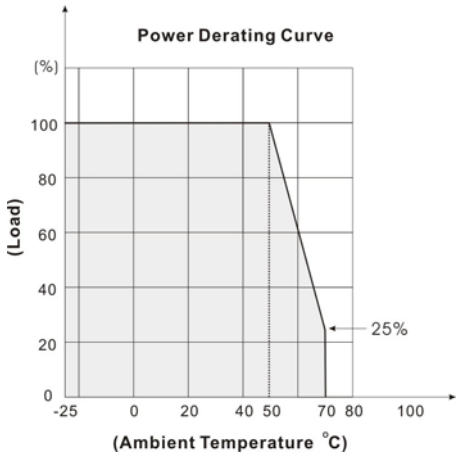


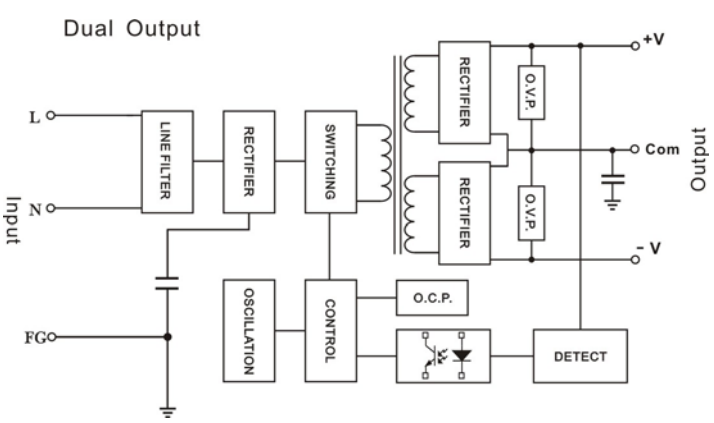


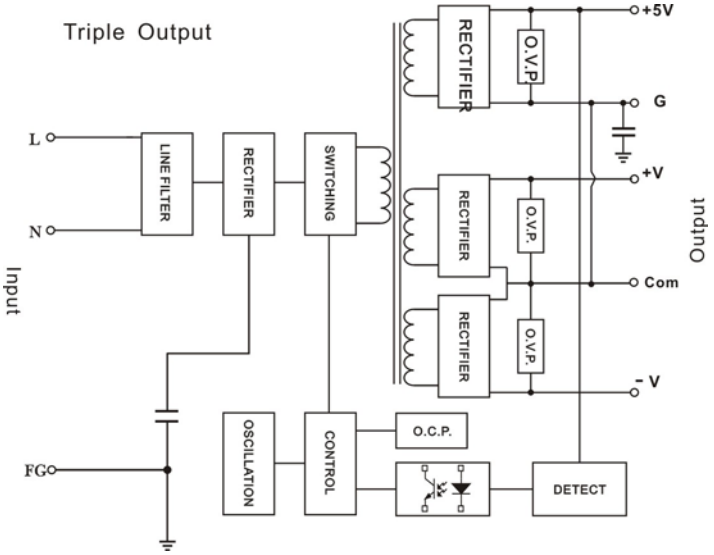

## ANC A SERIES 15 Watts

### SCREW TERMINAL

#### ANC-A2




| PIN# | Single | Dual | Triple |
|---|---|---|---|
| 1 | FG | FG | FG |
| 2 | AC IN (N) | AC IN (N) | AC IN (N) |
| 3 | AC IN (L) | AC IN (L) | AC IN (L) |
| 4 | NO CONNECT | NO CONNECT | -DC OUT |
| 5 | -DC OUT | -DC OUT | COMMON |
| 6 | NO CONNECT | COMMON | +DC OUT |
| 7 | +DC OUT | +DC OUT | +5V RTN |
| 8 | NO CONNECT | NO CONNECT | +5V OUT |

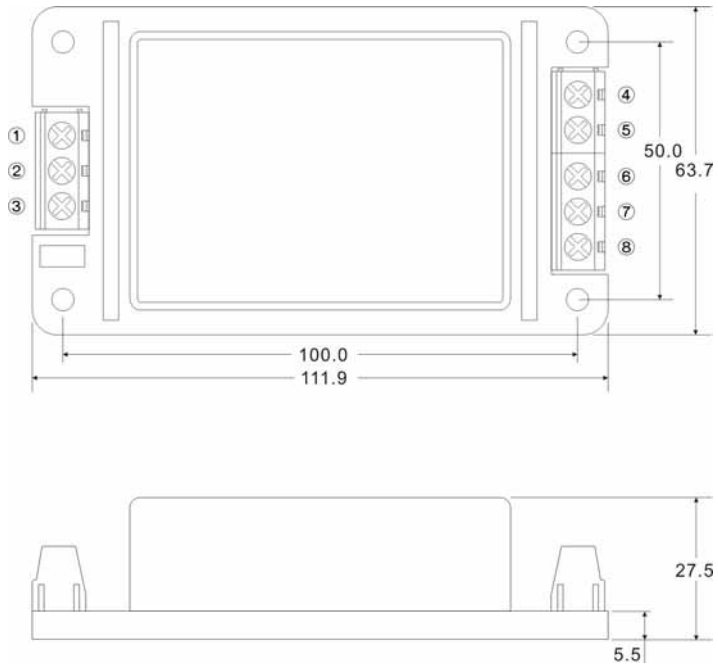


#### ANC-A5




| PIN# | Single | Dual | Triple |
|---|---|---|---|
| 1 | FG | FG | FG |
| 2 | AC IN (N) | AC IN (N) | AC IN (N) |
| 3 | AC IN (L) | AC IN (L) | AC IN (L) |
| 4 | NO CONNECT | NO CONNECT | -DC OUT |
| 5 | -DC OUT | -DC OUT | COMMON |
| 6 | NO CONNECT | COMMON | +DC OUT |
| 7 | +DC OUT | +DC OUT | +5V RTN |
| 8 | NO CONNECT | NO CONNECT | +5V OUT |

