Panasonic

**Panasonic Semiconductor Singapore**
**A Division of Panasonic Semiconductor Asia Pte Ltd**
Company Registration No. 197803125E
22, Ang Mo Kio Industrial Park 2, Singapore 569506.
Tel: (65)64818811 Fax: (65)64816486

APPROVED
EXTERNAL ISSUE

## *DOCUMENT COVER PAGE*

**Note: This cover page establishes the Doc No., Title and current status of the attached document.**

| Doc No. | SDSC-PSE-AN80T05 | Issue Level | Rev | Eff Date |
|---|---|---|---|---|
| | | 1 | 4 | 21-MAR-05 |
| Doc Title | Product Specifications for AN80T05 | Total no. of pages (excluding this page) | | 11 |

### Revision History

| Issue | Rev | Eff Date | S/N | Page | Change Details | Remarks |
|---|---|---|---|---|---|---|
| 1 | 3 | 16-DEC-04 | 1 | - | Added this cover page. | |
| | | | 2 | 9 | Removed this page. | |
| | | | 3 | 9A | Added this page for leadfree specification. | |
| | | | 4 | 9A | Amended Outer Lead Surface Process & | |
| | | | | | Chip Mounting Method. | |
| | 4 | 21-MAR-05 | 1 | 8 | Removed physical product marking indications. | |

| Prepared | M.A.M FOWZAN | Product Specifications | Ref No. | A-1 |
|---|---|---|---|---|
| Checked | Kenneth Law | **AN80T05** | Total Page | 11 |
| Approved | | | Page No. | 1 |

APPROVED EXTERNAL ISSUE

FINAL SPECS

MECS 01.06.'00 DOCUMENT CONTROL

| | |
|---|---|
| Structure | Silicon Monolithic Bipolar IC |
| Appearance | SIL-12 Pins Plastic Package<br>(Power Type With Fin) |
| Application | Voltage Supply for Car Audio Systems |
| Function | 7 Outputs Voltage Regulator<br>Peak Current Protection Circuit, ASO Protection Circuit, Thermal Protection Circuit |

| A | Absolute Maximum Ratings | | | | |
|---|---|---|---|---|---|
| No. | Item | Symbol | Ratings | Unit | Note |
| 1 | Storage Temperature | Tstg | -55 ~ +150 | ° C | 1 |
| 2 | Operating Ambient Temperature | Topr | -30 ~ +85 | ° C | 1 |
| 3 | Operating Ambient Pressure | Popr | $1.013 \times 10^5 \pm 0.61 \times 10^5$<br>(1.0 ± 0.6) | Pa<br>(atm) | |
| 4 | Operating Constant Acceleration | Gopr | 9,810<br>(1,000) | $m / s^2$<br>(G) | |
| 5 | Operating Shock | Sopr | 4,900<br>(500) | $m / s^2$<br>(G) | |
| 6 | Power Supply Voltage | Vcc | 26.0 | V | |
| 7 | Power Supply Current | Icc | 3.8 | A | 2 |
| 8 | Power Dissipation | PD | 2.70 | W | 3 |

| Operating Supply Voltage Range | Vcc | 6.6 V ~ 24.0 V |
|---|---|---|

APPROVED 02 JUN 2000 MECS QC

Note : 1) Except these items, all other measurements are taken at Ta = 25°C.

2) Over current limiting circuit built-in.

3) Ta = 75°C without heat sink. The relationship between power dissipation and ambient temperature follows that of derating curve.

| Eff. Date | Eff. Date | Eff. Date | Eff. Date | |
|---|---|---|---|---|
| 23-Aug-1999 | 22-SEP-99 | 1-Jun-2000 | | |

APPROVED
EXTERNAL ISSUE

FINAL SPECS

MECS
01.06.'00
DOCUMENT CONTROL

| | Recommended Operating Condition | | | | | | |
|---|---|---|---|---|---|---|---|
| No. | Item | Symbol | Limit | | | Unit | Note |
| | | | Min | Typ | Max | | |
| 1 | Recommended Power Supply Voltage | $V_{CC}$ | 10.0 | 13.2 | 16.0 | V | |
| | | | 11.0 | 13.2 | 16.0 | V | 1 |

Note : 1) This range is applicable to Illumination Output which is $V_{(Out)ILL}$=10V.

APPROVED EXTERNAL ISSUE
MECS 01.06.'00 DOCUMENT CONTROL

## B Electrical Characteristics

(Unless otherwise specified, ambient temperature is 25°C±2°C, Vcc=13.2V. )

| No. | Item | Symbol | Test Cct. | Condition | Limit | | | Unit | Note |
|---|---|---|---|---|---|---|---|---|---|
| | | | | | Min | Typ | Max | | |
| | <VILL Output 1> | | | | | | | | |
| 1 | Output Voltage VO1 | VILL | | IO1=-240mA | 9.5 | 10 | 10.5 | V | |
| 2 | Line Regulation | REGIN(ILL) | | VO1=10V, IO1=-240mA VCC=11~16V | - | 20 | 60 | mV | |
| 3 | Load Regulation | REGL(ILL) | | VO1=10V, IO1=0~-240mA | - | 60 | 120 | mV | |
| 4 | Min. Input/Output Voltage Difference | VDIF1(min) | | VO1=10V, VCC=9V IO1=-240mA | - | 0.4 | 0.7 | V | |
| 5 | Peak Output Current | IO1(peak) | | VO1≥9.5V | 300 | 550 | - | mA | |
| 6 | Ripple Rejection Ratio | RR1 | | VO1=10V, f=100Hz VCC=12~14V | 40 | 55 | - | dB | |
| | <VDD Output 2> | | | | | | | | |
| 7 | Output Voltage VO2 | VDD | | IO2=-80mA | 5.3 | 5.6 | 5.9 | V | |
| 8 | Line Regulation | REGIN(VDD) | | VO2=5.6V, IO2=-80mA VCC=10~16V | - | 5 | 15 | mV | |
| 9 | Load Regulation | REGL(VDD) | | VO2=5.6V, IO2=0~-80mA | - | 50 | 120 | mV | |
| 10 | Min. Input/Output Voltage Difference | VDIF2(min) | | VO2=5.6V, VCC=5V IO2=-80mA | - | 0.4 | 0.7 | V | |
| 11 | Peak Output Current | IO2(peak) | | VO2≥5.3V | 100 | 200 | - | mA | |
| 12 | Ripple Rejection Ratio | RR2 | | VO2=5.6V, f=100Hz VCC=12~14V | 50 | 60 | - | dB | |
| | <AMP Output 3> | | | | | | | | |
| 13 | Min. Input/Output Voltage Difference | VDIF3(min) | | IO3=-400mA | - | 1 | 1.5 | V | |
| 14 | Load Regulation | REGL(AMP) | | IO3=0~-400mA | - | 350 | 600 | mV | |
| 15 | Peak Output Current | IO3(peak) | | VO3≥11.7V | 500 | 800 | - | mA | |

APPROVED EXTERNAL ISSUE
FINAL SPECS
01.06.00 DOCUMENT CONTROL

| B | Electrical Characteristics | (Unless otherwise specified, ambient temperature is 25°C±2°C, Vcc=13.2V. ) | | | | | | | |
|---|---|---|---|---|---|---|---|---|---|
| No. | Item | Symbol | Test Cct. | Condition | Limit | | | Unit | Note |
| | | | | | Min | Typ | Max | | |
| | <ANT Output 4> | | | | | | | | |
| 16 | Min. Input/Output Voltage Difference | $V_{DIF4(min)}$ | | $I_{O4}$=-400mA | - | 1 | 1.5 | V | |
| 17 | Load Regulation | $REG_{L(ANT)}$ | | $I_{O4}$=0~-400mA | - | 350 | 600 | mV | |
| 18 | Peak Output Current | $I_{O4(peak)}$ | | $V_{O4}$≥11.7V | 500 | 800 | - | mA | |
| | <$V_{COM}$ Output 5> | | | | | | | | |
| 19 | Output Voltage $V_{O5}$ | $V_{COM}$ | | $I_{O5}$=-120mA | 8.25 | 8.70 | 9.15 | V | |
| 20 | Line Regulation | $REG_{IN(COM)}$ | | $V_{O5}$=8.7V, $I_{O5}$=-120mA $V_{CC}$=10~16V | - | 10 | 30 | mV | |
| 21 | Load Regulation | $REG_{L(COM)}$ | | $V_{O5}$=8.7V, $I_{O5}$=0~-120mA | - | 60 | 120 | mV | |
| 22 | Min. Input/Output Voltage Difference | $V_{DIF5(min)}$ | | $V_{O5}$=8.7V, $V_{CC}$=7.8V $I_{O5}$=-120mA | - | 0.4 | 0.7 | V | |
| 23 | Peak Output Current | $I_{O5(peak)}$ | | $V_{O5}$≥8.25V | 150 | 300 | - | mA | |
| 24 | Ripple Rejection Ratio | RR5 | | $V_{O5}$=8.7V, f=100Hz $V_{CC}$=12~14V | 50 | 60 | - | dB | |
| | <AM Output 6> | | | | | | | | |
| 25 | Output Voltage $V_{O6}$ | $V_{AM}$ | | $I_{O6}$=-120mA | 8.25 | 8.70 | 9.15 | V | |
| 26 | Line Regulation | $REG_{IN(AM)}$ | | $V_{O6}$=8.7V, $I_{O6}$=-120mA $V_{CC}$=10~16V | - | 10 | 30 | mV | |
| 27 | Load Regulation | $REG_{L(AM)}$ | | $V_{O6}$=8.7V, $I_{O6}$=0~-120mA | - | 60 | 120 | mV | |
| 28 | Min. Input/Output Voltage Difference | $V_{DIF6(min)}$ | | $V_{O6}$=8.7V, $V_{CC}$=7.8V $I_{O6}$=-120mA | - | 0.4 | 0.7 | V | |
| 29 | Peak Output Current | $I_{O6(peak)}$ | | $V_{O6}$≥8.25V | 150 | 300 | - | mA | |
| 30 | Ripple Rejection Ratio | RR6 | | $V_{O6}$=8.7V, f=100Hz $V_{CC}$=12~14V | 50 | 60 | - | dB | |

APPROVED EXTERNAL ISSUE
01.06.'00 DOCUMENT CONTROL

## B Electrical Characteristics

(Unless otherwise specified, ambient temperature is 25°C±2°C, Vcc=13.2V. )

| No. | Item | Symbol | Test Cct. | Condition | Limit | | | Unit | Note |
|---|---|---|---|---|---|---|---|---|---|
| | | | | | Min | Typ | Max | | |
| | <FM Output 7> | | | | | | | | |
| 31 | Output Voltage $V_{O7}$ | $V_{FM}$ | | $I_{O7}$=-200mA | 8.25 | 8.70 | 9.15 | V | |
| 32 | Line Regulation | $REG_{IN(FM)}$ | | $V_{O7}$=8.7V, $I_{O7}$=-200mA $V_{CC}$=10~16V | - | 20 | 60 | mV | |
| 33 | Load Regulation | $REG_{L(FM)}$ | | $V_{O7}$=8.7V, $I_{O7}$=0~-200mA | - | 60 | 120 | mV | |
| 34 | Min. Input/Output Voltage Difference | $V_{DIF7(min)}$ | | $V_{O7}$=8.7V, $V_{CC}$=7.8V $I_{O7}$=-200mA | - | 0.4 | 0.7 | V | |
| 35 | Peak Output Current | $I_{O7(peak)}$ | | $V_{O7}$≥8.25V | 250 | 450 | - | mA | |
| 36 | Ripple Rejection Ratio | RR7 | | $V_{O7}$=8.7V, f=100Hz $V_{CC}$=12~14V | 45 | 55 | - | dB | |
| 37 | Standby Circuit Current | $I_{STB}$ | | Standby Pin=0V | - | 0.55 | 0.80 | mA | |
| | Input (Standby) | | | | | | | | |
| 38 | Standby Level | $V_{TH1-1}$ | | | - | - | 1.1 | V | |
| 39 | Active Level | $V_{TH1-2}$ | | | 1.7 | - | - | V | |
| 40 | Input Current when High | $I_{in1}$ | | $V_{th1}$=5V | 100 | 175 | 250 | µA | |
| | Input (Mode 2 SW) | | | | | | | | |
| 41 | Standby Level | $V_{TH2-1}$ | | | - | - | 1.6 | V | |
| 42 | Active Level | $V_{TH2-2}$ | | | 2.4 | - | - | V | |
| 43 | Input Current when High | $I_{in2}$ | | $V_{th2}$=5V | 13 | 25 | 37 | µA | |
| | Input (Mode 1 SW) | | | | | | | | |
| 44 | Voltage when AM ON | $V_{TH3-1}$ | | | - | - | 1.1 | V | |
| 45 | Voltage when FM ON | $V_{TH3-2}$ | | | 2.7 | - | - | V | |
| 46 | Input Current when High | $I_{in3}$ | | $V_{th3}$=5V | 13 | 25 | 37 | µA | |

APPROVED EXTERNAL ISSUE
FINAL SPECS
MECS 01.06.'00 DOCUMENT CONTROL

* Input/Output Timing Chart

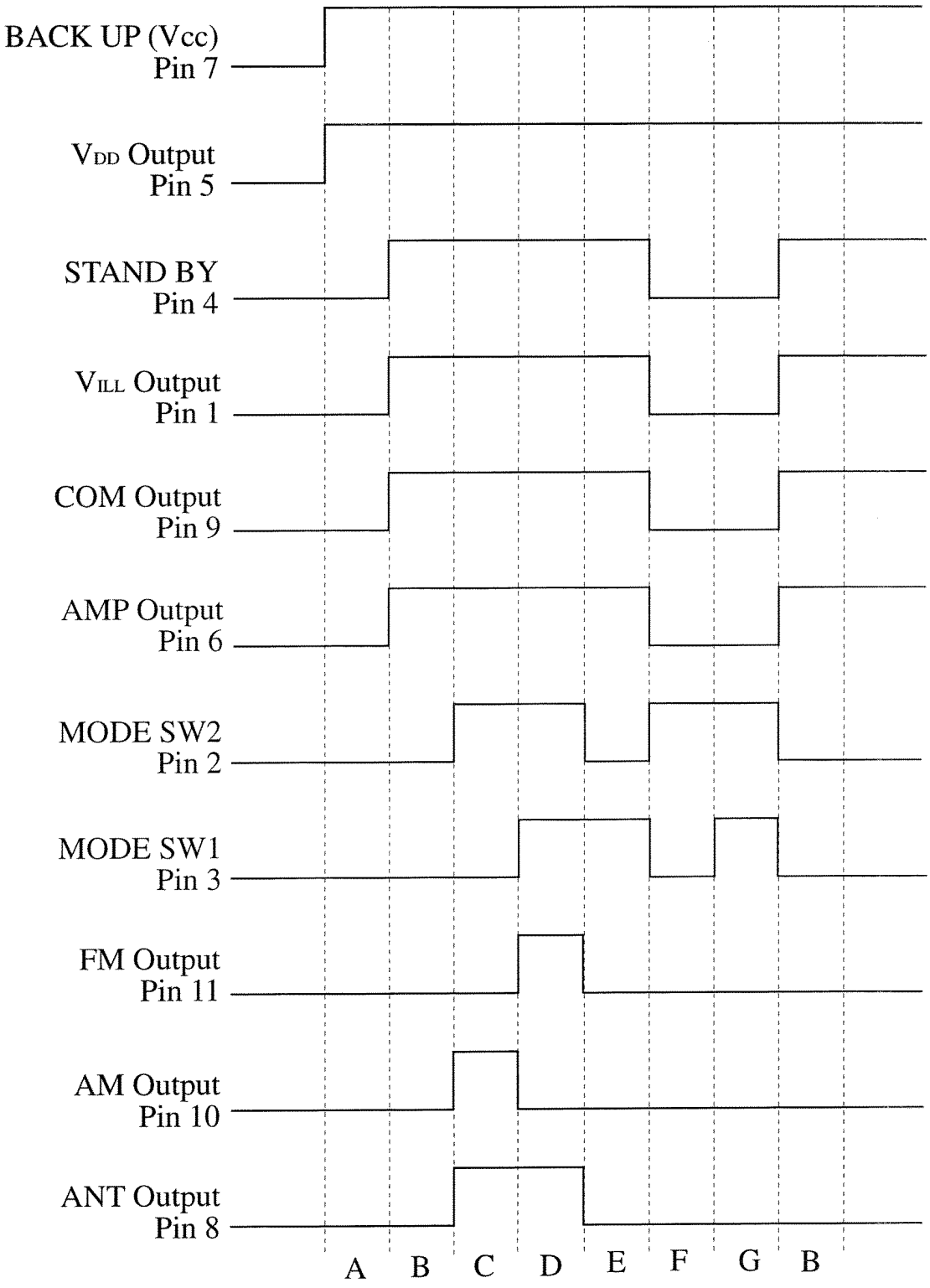

APPROVED
EXTERNAL ISSUE

FINAL SPECS

MECS
01.06.'00
DOCUMENT CONTROL

## Circuit Function Block Diagram

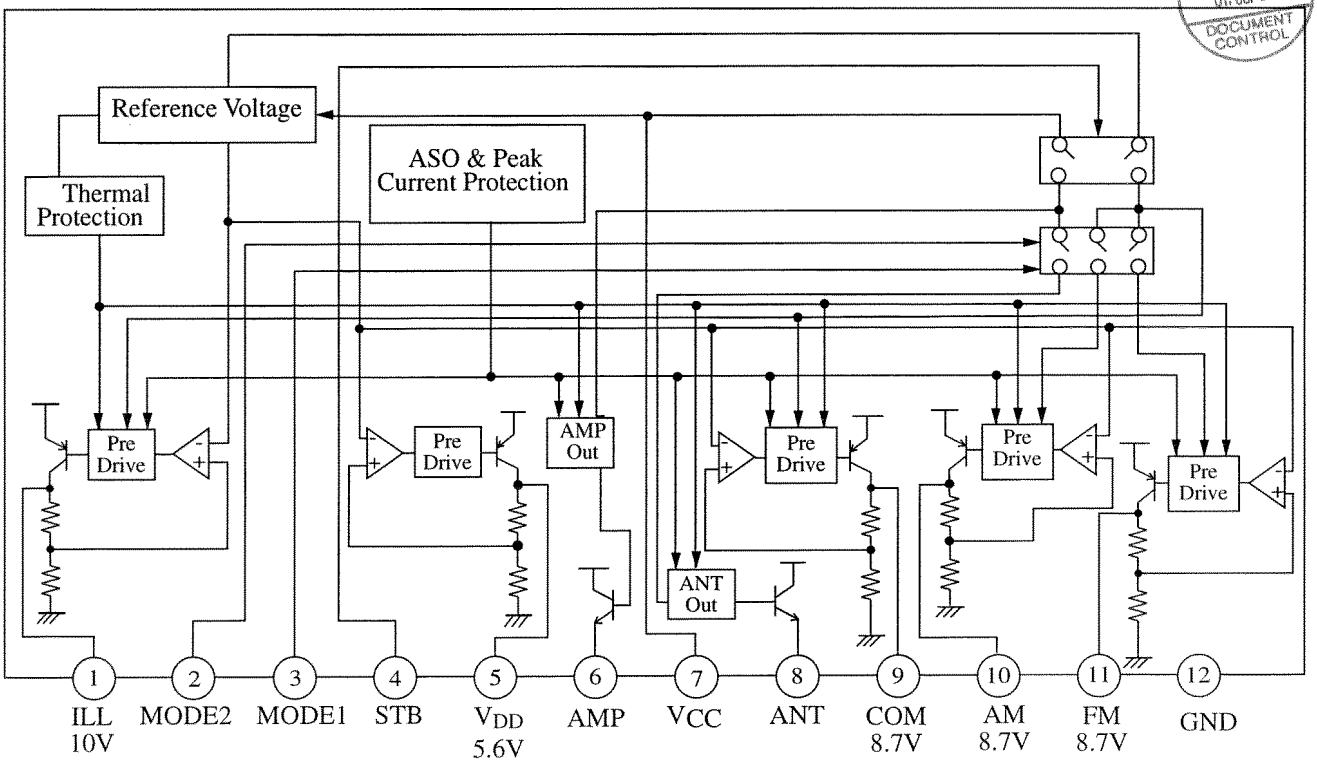


## Pin Descriptions

| Pin No. | Pin Descriptions | Function |
|---|---|---|
| 1 | Illumination Output | 10V power supply with a maximum output current of 300mA for a Illumination. |
| 2 | MODE2 SW | AM and ANT output are turned ON when this pin is 5V. |
| 3 | MODE1 SW | AM and FM output are switched when this pin is 5V. |
| 4 | STAND BY | Only VDD output during the 0V standby state; ILL, COM and AMP outputs are turned ON when this pin is 5V. |
| 5 | VDD Output | 5.6V Power supply with a maximum output current of 100mA for a micro-controller. Output is always available if BACKUP power supply is connected. |
| 6 | AMP Output | Power supply to activate a remote amplifier; a voltage of about 1V (Typ) lower than Vcc voltage is provided with a maximum output current of 500mA. |
| 7 | VCC | Connected to car BACKUP and ACC Power supplies. |
| 8 | ANT Output | Power supply to drive an antenna voltage of about 1V (Typ) lower than the Vcc voltage is provided with a maximum output current of 500mA. |
| 9 | COM Output | 8.7V power supply with a maximum output current of 150mA; this can be used as a system common power supply. |
| 10 | AM Output | 8.7V power supply with a maximum output current of 150mA for AM receiver. |
| 11 | FM Output | 8.7V power supply with a maximum output current of 250mA for FM receiver. |
| 12 | GND | Connected to the IC substrate. |

| | | | | |
|---|---|---|---|---|
| Prepared | Lim Fuey Sheen | Product Specifications | Ref No. | E |
| Checked | Kenneth Law | | Total Page | 11 |
| Approved | Yasuo Higuchi | **AN80T05** | Page No. | 8 |

APPROVED
EXTERNAL ISSUE

**12-SIL(FP)**

| Package Name | FP-12S |
|---|---|

Unit : mm

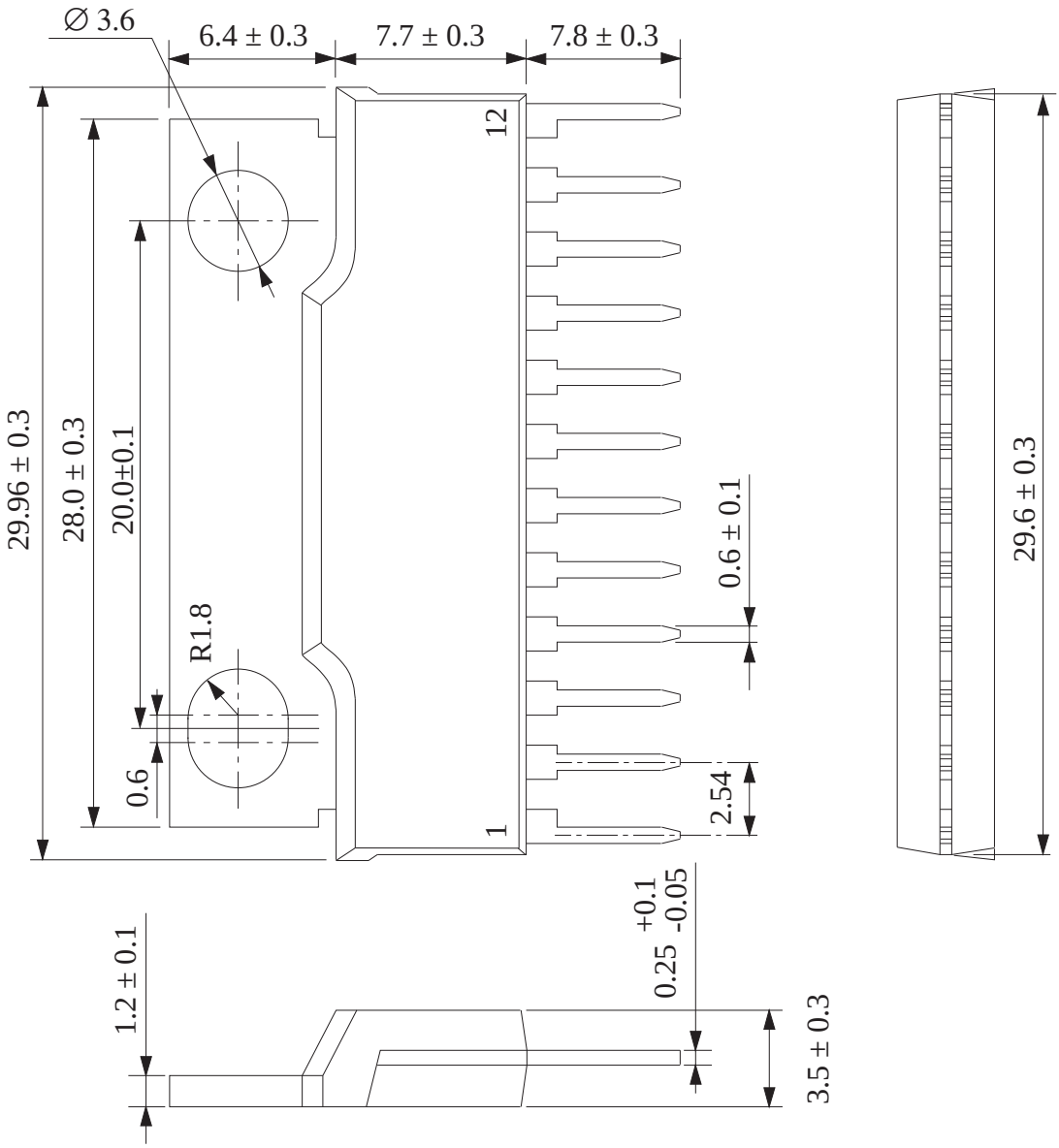


*4

| Eff. Date | Eff. Date | Eff. Date | Eff. Date | |
|---|---|---|---|---|
| 21-MAR-05 | | | | |

APPROVED
EXTERNAL ISSUE

## (Structure Description)

| | | |
|---|---|---|
| Chip surface passivation | [SiN,] PSG, Others ( ) | 1 |
| Lead frame material | Fe group, [Cu group,] Others ( ) | 2, 6 |
| Inner lead surface process | [Ag plating,] Au plating, Others ( ) | 2 |
| *3 Outer lead surface process | [Solder plating (98Sn-2Bi),] Solder dip, Others ( ) | 6 |
| *3 Chip mounting method | Ag paste, Au-Si alloy, [Solder (95.5Pb-2.5Ag-2Sn)**] | 3 |
| Wire bonding method | [Thermalsonic bonding,] Others ( ) | 4 |
| Wire material | [Au,] Others ( ) | 4 |
| Mold material | [Epoxy,] Others ( ) | 5 |
| Molding method | [Transfer mold,] Multiplunger mold, Others ( ) | 5 |
| Fin material | [Cu group,] Others ( ) | 7 |

**Package FP-12S**

**Under RoHS exemption clause, Lead (Pb) in high melting temperature type solder (i.e. tin-lead solder alloys containing more than 85% of lead), is exempted until 2010.

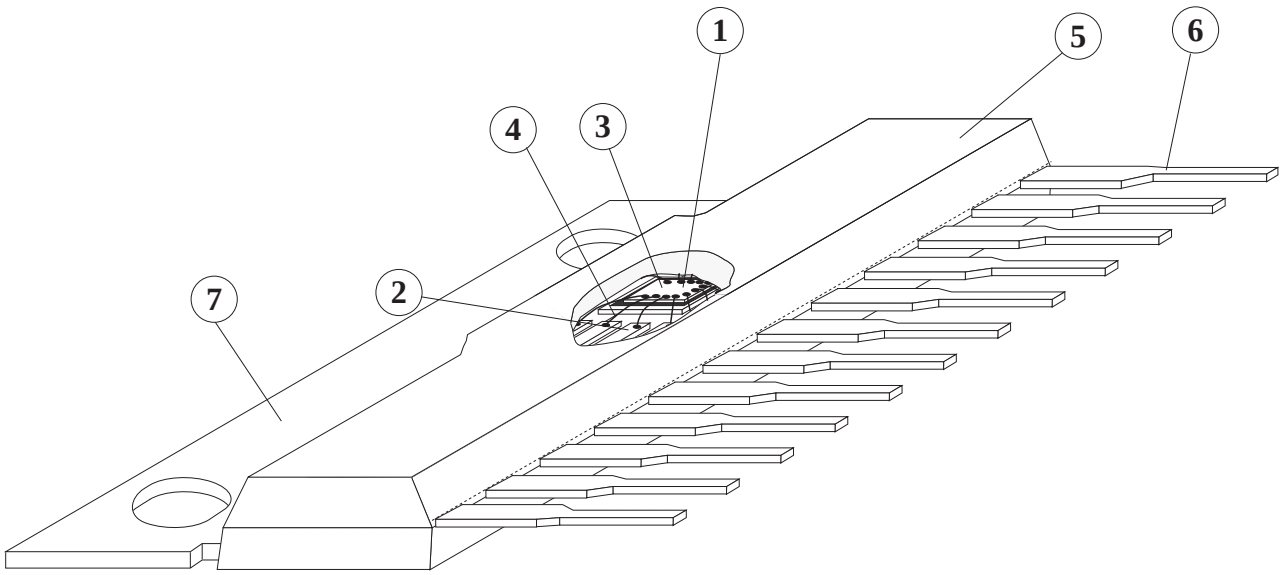


*3

APPROVED
EXTERNAL ISSUE
FINAL SPECS
MECS 01.06.'00 DOCUMENT CONTROL

## Application Circuit

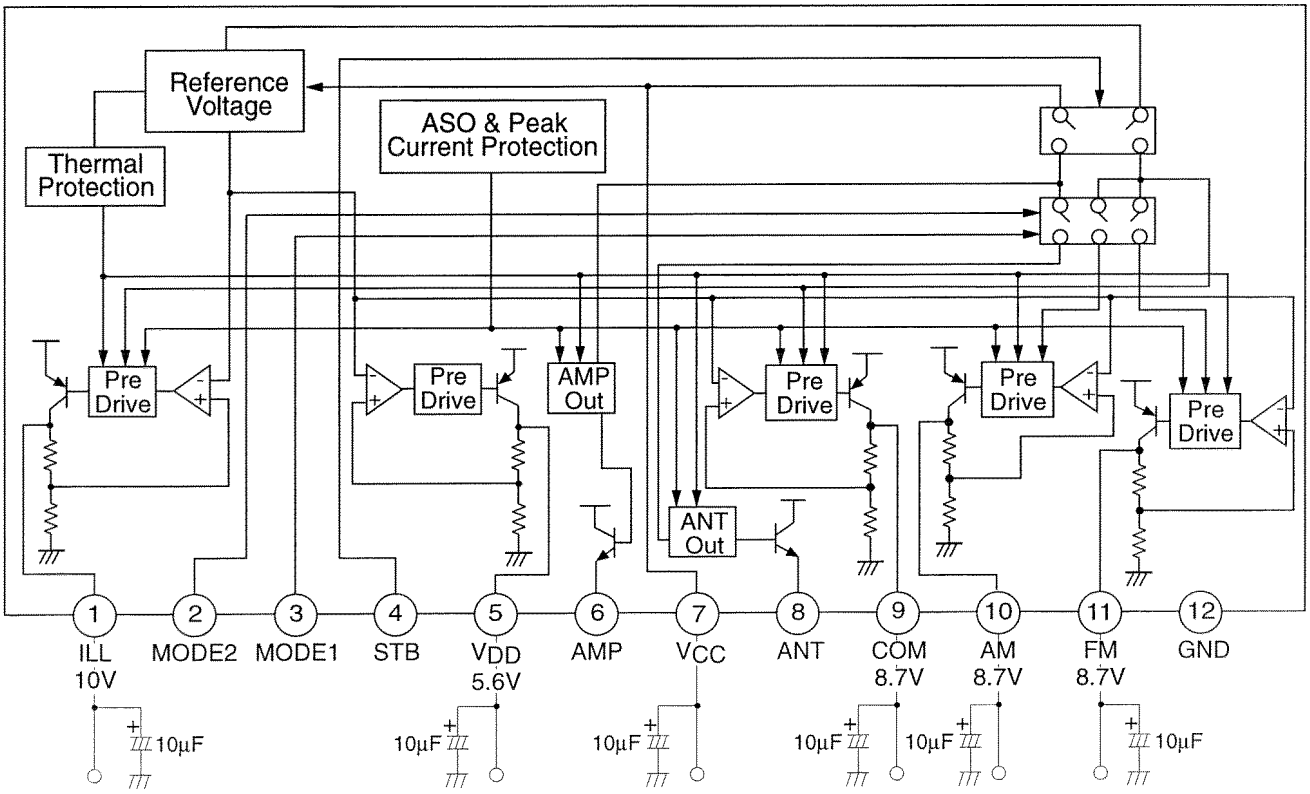


| | |
|---|---|
| STB 'OFF' | GND |
| STB 'ON' | 5V |

Note : To prevent oscillation at each output, make sure to connect a capacitor having a capacitance of 10µF or greater between GND and each of the ILL (pin 1), $V_{DD}$ (pin 5), $V_{CC}$ (pin7), COM (pin 9), AM (pin 10), and FM (pin 11) pins. We recommend using a tantalum electrolytic capacitor whose capacitance is unsusceptible to temperature.

## PD - Ta Curves

MECS 01.06.'00 DOCUMENT CONTROL

(1) Tc = Ta, 62.5W ( θj-c = 2 °C/W )

(2) 20.83W ( θf = 4.0 °C/W )

With a 100cm$^2$ X 3mm Al heat sink (black colour coated)

or a 200cm$^2$ X 2mm Al heat sink (not lacquered)

(3) 15.63W ( θf = 6.0 °C/W )

With a 100cm$^2$ X 2mm Al heat sink (not lacquered)

(4) 3.0W at Ta = 25 °C ( θj-a = 42 °C/W )

Without heat sink

