Si70xx Humidity and Temperature Sensor Designer's Guide

1. Introduction

This designer's guide describes the Si70xx family of humidity and temperature sensor products in a variety of different applications. The first half provides a detailed description of the Si70xx family of humidity sensors including specific application examples. System-level design considerations including sensor placement, system calibration and product use are discussed. Finally, special handling considerations for both the sensor device and the end product containing the sensor are discussed.

The second half begins with a brief description of humidity and the various ways it is quantified. It is important to understand the terminology and the relative merits of each measurement. Next, methods for measuring humidity and measurement challenges are presented. Finally, the impact of humidity on comfort is discussed.

" Appendix A—Industry Specifications and Guidelines" contains valuable reference information about industry standards applicable to the measurement and control of humidity. " Appendix B—Equations for Vapor Pressure and Humidity Calculations" contains a description of several equations useful for humidity related calculations. " Appendix C—Term, Unit, and Coefficient Reference" contains a convenient reference containing unit conversions, coefficients and a glossary of humidity related terms used in this document. " Appendix D—Nonlinear Correction of Voltage Inputs with the Si7013" explains the nonlinear correction of the Si7013 voltage input. " Appendix E—Thermal Model for a Sensor on a Paddle" presents a thermal model for a sensor on a paddle.

Figure 1. Si7013 Relative Humidity and Temperature Sensor Shown with and without Hydrophobic Cover Installed

Figure 2. Si7053/4/5 Temperature Sensor

Figure 3. Si7034 Relative Humidity and Temperature Sensor

 Copyright © 2015 by Silicon Laboratories

2. Si70xx Monolithic Humidity and Temperature Sensors

The Si70xx family uses state-of-the-art sensing technologies to create precise monolithic humidity and temperature sensors. Temperature is sensed by a precision Vbe referenced circuit on the die. Humidity is sensed by measuring the capacitance change of a low-k dielectric layer applied to the surface of the die. Consequently, both temperature and humidity are precisely measured in extremely close proximity on the same monolithic device, which is critical for accurate dew point measurement.

The Si7005 was the first-generation sensor in a 4 mm x 4 mm package. The Si7015 is a pin-compatible upgrade (see “AN764: Upgrading from the Si7005 to the Si7015”). The Si7006, Si7007, Si7013, Si7020, Si7021, Si7022, and Si7023 second-generation parts come in an industry-standard 3 mm x 3 mm package. The Si7034 is available in an industry standard 2x2 mm package.

The Si7006, Si7013, Si7020, Si7021, and Si7034 are I^2C parts that all have similar block diagrams. For example, Figure 4 shows a functional block diagram of the Si7013 humidity and temperature sensor. Very few external components are required. Communication with the device is via the I^2C bus SDA and SCL pins. The Si7013 has an optional analog input path for measurement of a remote thermistor or any other analog voltage. It also has a dual function pin for I^2C address selection and thermistor biasing. Depending on the microcontroller used in the application, the 10 kΩ pull-ups on the I^2C bus may be included in the microcontroller. The only other component required is the 0.1 µF power supply bypass capacitor.

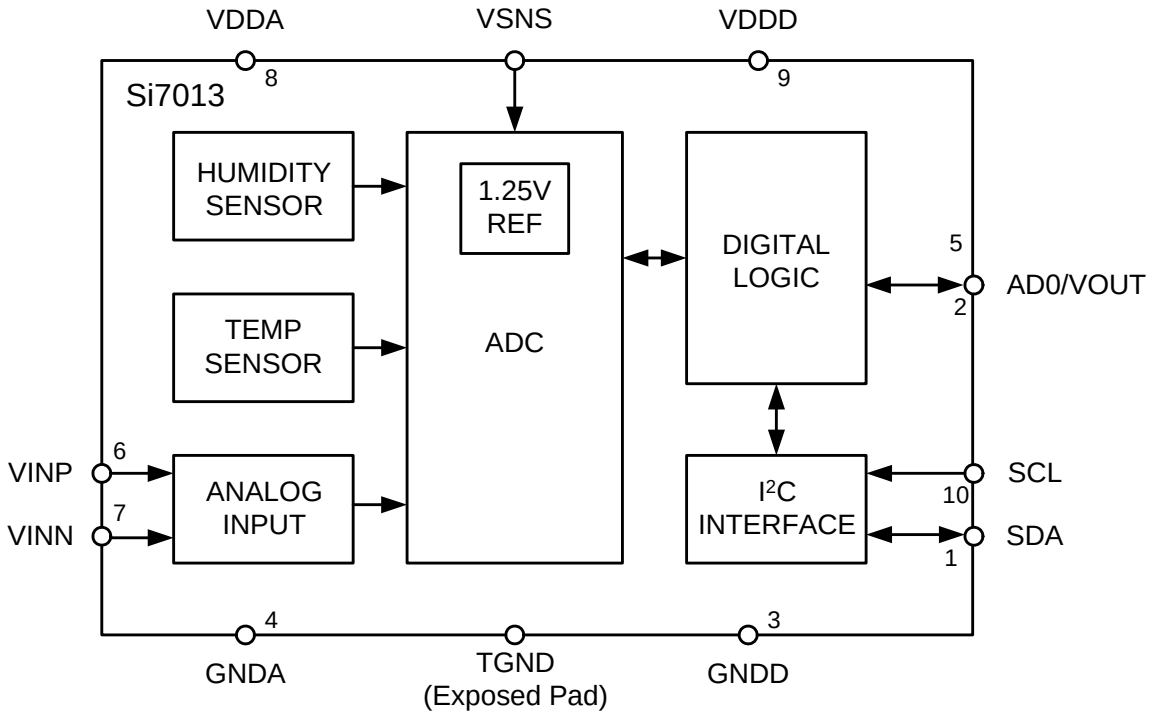

Figure 4. Si7013 Functional Block Diagram

The Si7050/3/4/5 temperature sensors are functionally identical to the I^2C temperature and humidity sensors, but there is no hole in the package, and only the temperature sensor functionality is supported.

Refer to the data sheets (e.g., Si7013) for detailed pin descriptions, register summary, and timing details.

The Si7007, Si7022 and Si7023 parts contain pulse width modulated (PWM) outputs. On one pin, the pulse width is proportional to temperature while the pulse width on a different pin is proportional to humidity. There is a select pin that can be used to interchange the assignment of the outputs pins. In most applications the PWM output of these parts is filtered to give a voltage proportional to temperature or humidity. The functional block for all the PWM output parts is the same, and this is shown in Figure 5 for the Si7022.

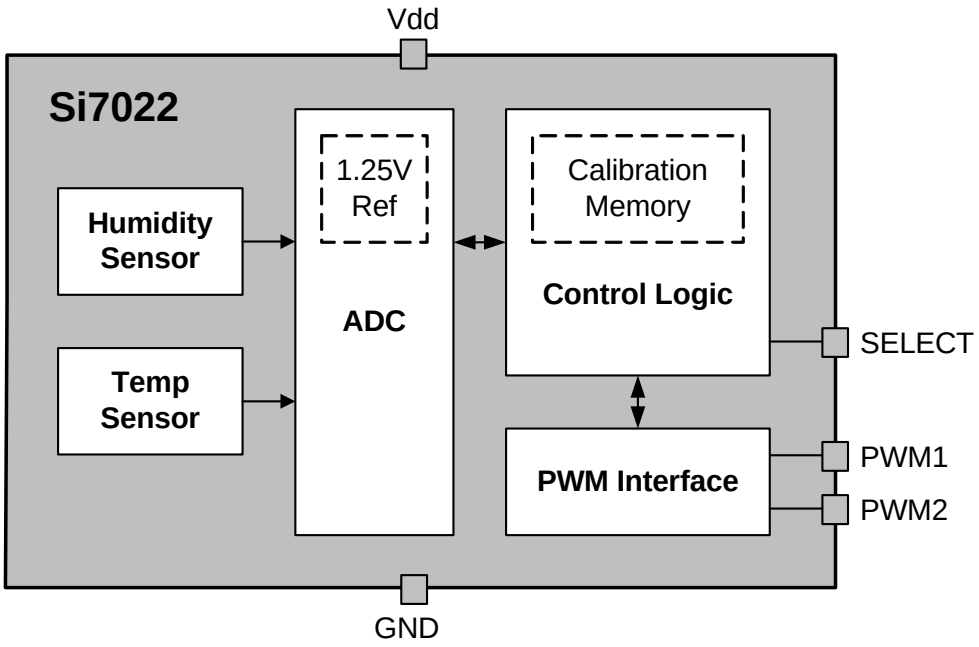

Figure 5. Si7022 Functional Block Diagram

2.1. Humidity Sensor Technology

Figure 6 illustrates the humidity sensor configuration. The dielectric layer is exposed to ambient air through the package opening. Humidity in the air is exchanged with the dielectric material until equilibrium is reached. The permittivity of the dielectric material is proportional to the amount of moisture it has absorbed. The capacitance increases as the ambient air becomes more humid and decreases as the ambient air becomes less humid. If the Si70xx is used at the dew point and condensation occurs on the sensor, the on-chip heater can be activated to dry the sensor and restore operation once the sensor is above the dew point.

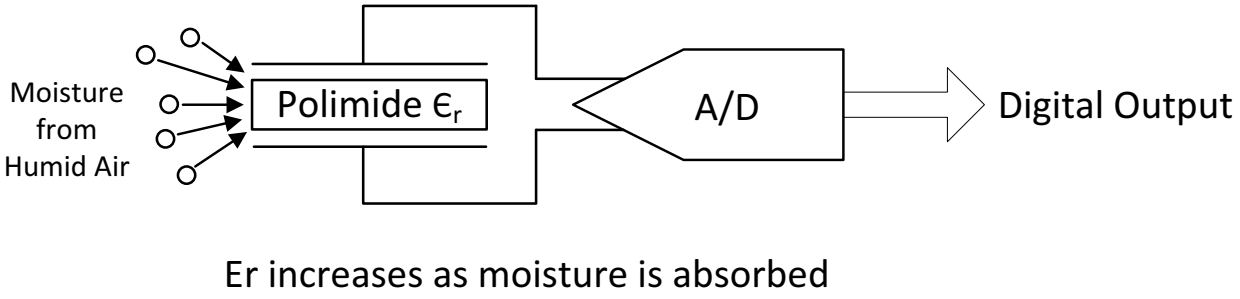

Figure 6. Humidity Sensor Configuration

2.2. Temperature Sensor

The Si70xx parts have a very accurate (as good as ±0.3 °C over the full –40 to +125 °C temperature range) temperature sensor integrated into the device. The Si70xx family of devices is designed to consume very little power and does not artificially heat the temperature sensor unless, of course, the heater is turned on. The thermal paddle on the bottom of the chip is electrically connected to ground inside the chip. The paddle can be soldered to a ground plane on the PCB which can in turn be extended beyond the chip or can be left floating. In either case, the ground pad is the thermal input to the on-chip temperature sensor. Care must be taken to isolate the chip from thermal sources in the system in which it is included. Refer to the section on PCB layout guidelines for more details on PCB layout and system design considerations to maximize sensor performance.

3. System Design Considerations

3.1. Power Requirements

The Si70xx devices are inherently low power if the heater is not used. For example, Si7013 power consumption during a conversion is 150 µA typical, and the power consumption in idle mode is less than 100 nA. This low power consumption means that there is no significant self-heating in the conversion process. Because the Si7007, Si7022, and Si7023 PWM output parts do humidity and temperature conversions twice a second to update the PWM output the power consumption if these parts is higher at 180 µA typical. Generally this still does not cause significant heating.

3.1.1. Battery Life Considerations

Normally, battery life is rated in milliamp-hours (mAh). For example, an Energizer® E91 battery is rated for approximately 2500 mAh for light loads when allowed to discharge to 0.9 V.

Considering the case of an Si7013, which has a V_{DD} range of 1.71 to 3.6 V, two AA batteries in series provide 3.0 V when charged and 1.8 V when fully depleted, so this is acceptable.

Again, for the case of an Si7013, a humidity and temperature conversion typically consumes 150 µA. In normal mode, the total time for an RH and temperature conversion is 8.4 msec, and, in fast mode, this is reduced to 5.5 msec. A temperature conversion is performed every time an RH conversion is done (to allow for temperature correction).

If a conversion is performed once per second, then 31.5×10^6 conversions occur per year. The number of milliamp-hours is as follows:

$$\text{milliamp hours (mAh)} = \text{number of conversions} \times \text{conversion time (msec)} \times \frac{\text{conversion current (mA)}}{(1000\text{msec/sec} \times 3600\text{sec/hour})}$$

Plugging in values, this translates to 11.1 mA-hours for one year in normal mode and 7.2 mA-hours for fast mode.

The 100 nA quiescent current of the Si7013 will consume an additional number of milliamp hours, as shown below:

$$\text{milliamp hours (mAh)} = \text{quiescent current (nA)} \times \frac{8760\ \text{(hours/year)}}{10^6\ \text{nA/mA}}$$

At 100 nA quiescent current, this is 0.876 mA-hours per year.

Even when targeting a 10-year battery life, the sensor itself would consume less than 120 mA hours of charge in normal mode. This means that only about 5% of the available 2500 mAh is consumed by the sensor.

Of course, in a practical system, there are many other drains on a battery, and, often, coin cells, which have much less capacity than AA cells, are used. On the other hand, it is generally acceptable to reduce the conversion rate well below once per second, meaning that a sensor, such as the Si7013, will generally consume a small portion of the available battery life.

3.2. Temperature and Humidity Sensor Placement

The following are general guidelines for sensor placement:

- For accurate humidity and temperature measurement, keep heating from other components to less than 0.2 °C, or compensate for heating.
- For rapid response to air temperature changes, keep the thermal mass that is attached to the sensor low, and insulate the sensor from larger system thermal masses.
- For rapid response to humidity changes, keep the sensor exposed to the ambient, or make the opening comparable in size to the cavity in which the sensor resides.
- Do not use materials, such as soft plastic, glue, or wood, in the vicinity of the humidity sensor since these can absorb or emit moisture as well as give off fumes that affect the senor reading.
- Protect the sensor against liquids and dust using the factory-installed ePTFE filter or similar cover.
- Protect against ESD with exposed ground metal. For the humidity sensors, if the sensor is not in a cavity, use the ePTFE filter cover to prevent ESD directly into the sensor area. Use conformal coating material on the leads, or use ESD diodes on all pins. Unused pins may be connected to VDD for ESD protection.

For situations in which it is not possible to completely insulate the sensor for the system, insulate as much as possible and use a temperature sensor connected to the system to allow compensation of residual heating. If a thermal model can be developed for the overall system, it is also possible to apply an inverse filter and speed up the response of the overall system to changes in the ambient. These are discussed in more detail below.

3.2.1. Place the Sensor Away from Heat Sources

As air is heated or cooled, humidity will be reduced or increased by approximately 5% per degree. That is, increasing temperature by 1 °C will reduce the relative humidity of 100% humid air to 95%RH or 50% humid air to 47.5% RH. This “rule of thumb” is useful for estimating the effect of small temperature increases.

The first consideration in trying to measure humidity or temperature outside of an enclosure is to place the sensor away from any heat sources internal to the enclosure or to thermally insulate the sensor from the internal heat source so it is better connected to the ambient environment than internal heat sources. For accurate humidity measurement, heating from other sources should be limited to no more than 0.2 °C.

In some cases, where the amount of heating is known or can be measured, it is possible to compensate for the heating or cooling. For larger temperature increases, the “Magnus” equation can be used to more accurately calculate the change of humidity for a change in temperature (see also appendix B).

3.2.2. Thermal Mass and Thermal Resistance

When the IC is soldered down, it becomes thermally connected to the printed circuit board on which it is mounted. The printed circuit board is, in turn, thermally connected to the system it is mounted within. The time constant to respond to changes in ambient air temperature depends on the effective thermal mass the device is connected to as well as the effective thermal resistance.

If the entire system (such as a thermostat) can be expected to go up or down in temperature along with the ambient it is measuring, then separating the sensor from the system is not necessary, but response time will generally be slow. A general model for this is shown in Figure 7.

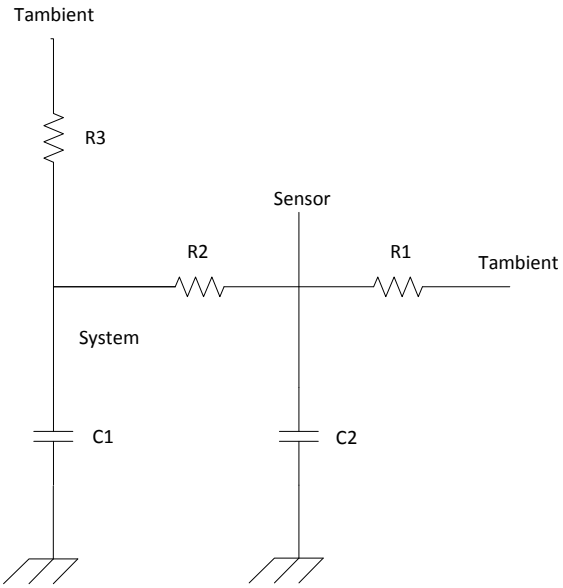

Figure 7. General Thermal Model for Sensor Placement

If the system has a large thermal mass (C1) or other internal heat sources the thermal resistance from the sensor to the system (R2) should be much larger than the thermal resistance of the sensor to ambient (R1). For rapid response, the thermal mass connected to the sensor (C2) should be minimized. A practical example of this along with some specific numbers is discussed in "Appendix E—Thermal Model for a Sensor on a Paddle" on page 38.

3.2.3. Optimizing Humidity Response

The humidity sensor element of the Si7006, Si7013, Si7020, Si7021, and Si7034 devices have a response time of 17–18 seconds at room temperature. For the Si7007, Si7022, and Si7023 devices, the humidity sensor response time is six seconds at room temperature. If the humidity sensing element is placed within a cavity, this will be affected by the following factors.

- The temperature of the cavity compared to the air temperature
  - As discussed in "2.1.Humidity Sensor Technology" on page 4, as air is heated or cooled, the air humidity will decrease or increase by 5% per degree of heating or cooling. The sensor and surrounding air must track the ambient temperature in order to accurately measure humidity.
- The size of the cavity versus the size of the opening
  - Generally, the opening should be comparable in size of the cavity in order to avoid slowing of the response.
- Porous materials within the cavity can absorb or emit humidity and dramatically affect the response. Organic vapors, such as those from glue, can also produce a response. These effects are worse if the cavity opening is small compared to the cavity size. The cavity should be made of materials, such as hard plastic, metal, or hard rubber. Any sealants should be fully cured.

3.2.4. Protection Against Liquids and Dust

Like most other IC type humidity sensors, the Si70xx humidity sensors measure humidity by the change in dielectric constant of a porous polyimide film. Conductive dust particles will cause errors in the readings, particularly if they become lodged in the humidity sensing film. Organic solvents can cause a semi-permanent shift in humidity readings. Even liquid water can have a permanent effect on humidity response if it leaves a mineral residue after evaporation.

Generally, a porous cover is used to protect against dust and liquids. Typically, the cover is made of expanded polytetrafluoroethylene (ePTFE). Polytetrafluoroethylene is often known under the name brand Teflon®, and ePTFE is often known under the name brand Gore-Tex®.

The effectiveness of the cover is expressed by the ingress protection or IP rating. A cover with a rating of IP67 is recommended, which means the cover is completely dustproof and can withstand water immersion to a depth of at least one meter.

Most of the Si70xx humidity and temperature devices are offered with a factory installed cover that is rated IP67. The cover is solder resistant (it can withstand a peak temperature of 260 °C) and has a pore size of 0.25 µm, so it blocks all dust while passing water vapor. The cover will block liquid water at pressure equivalent to over one meter depth.

As a practical test of the effectiveness of the cover, Si7021 devices were subjected to a cigarette smoke test. In this test, Si7021 devices were placed in a 3 liter jar with 20 lit cigarettes. During the time the cigarettes were burning, a small air gap was allowed so the cigarettes would not extinguish. After burning was complete, the air gap was removed, and the parts were allowed to sit in the smoke for 24 hours. Use of the cover reduced the maximum shift from this extreme exposure from almost 40% RH to about 6% RH. In another test in which 100 cycles of condensation were allowed to form on the parts, the cover reduced the shift in reading from an average of 2.0% to 1.57%. The cover has a minimal effect on response time.

3.2.5. Compensation for Heat Sources and Optimizing Transient Response

In some cases, it is not possible to completely isolate the sensor from the system for aesthetic reasons, and it is desirable to still obtain a fast and accurate measurement of the ambient temperature and humidity by compensating for the effects of the system.

In these cases, it is best to optimize the sensor location as much as possible using the above guidelines. To compensate for the system effects, either the system must have a known effect, or an additional temperature sensor (typically a thermistor) is needed. The thermistor should be placed to measure the temperature of the system in the place where it is having the most influence on the humidity and temperature sensor.

In these cases, the Si7013 sensor is a good choice because it has an auxiliary A/D for digitizing the thermistor voltage and a linearization engine for converting this to temperature.

3.3. Dealing with Condensation and High Humidity

Prolonged exposure to high humidity will cause gradual drift of the humidity sensor readings. All members of the Si70xx family have on-chip heaters that can be used to heat the chip to counter local high humidity and reduce this drift.

Condensation will also cause erroneous readings. If the condensation forms on the polyimide film, there can be permanent shifts in sensor accuracy due to residue left after evaporation. The hydrophobic filter prevents liquid water from penetrating, so condensation on the outside of the part will generally not result in condensation on the polyimide sensing film of the Si70xx. However, if condensation forms on top of the filter, readings will be high until it evaporates. Also condensation on the PCB can affect reliability and signal integrity. Turning on the heater will reduce the chance of condensation forming and will also evaporate condensation.

However, turning on the heater will affect the local relative humidity (see also “Estimating RH with Heating” on page 28. For example, turning on the heater with the control setting 0x3 heats the sensor about 5 °C (depending on PCB design and airflow), which results in a ~30% drop in local RH. However, due to variability in air flow and heater current, the Si70xx heating can vary ±2 °C making RH readings with the heater on unreliable. Depending on the nature of the application, there are several ways of dealing with this:

- The amount of heating can be measured or characterized. For example, turn the heater on and off a few times, and use the on-chip temperature sensor to measure the amount of heating.
- The air ambient temperature can be sensed with a separate sensor, and RH can be calculated
- While the RH reading is not accurate, the dew point reading is fairly accurate (although generally about 1 °C low) with the heater on. If dew point is the only concern, it can be calculated from the humidity and temperature and then subtract 1 °C.

The Si7006, Si7013, Si7020, Si7021, and Si7034 have options for increasing the heater current up to 94 mA with VDD = 3.3 V. Depending on the PCB layout and thermal design, it is possible to get junction temperatures well in excess of 100 °C. Shifts in sensor readings from previous exposure to high humidity can be reversed by turning on the heater with a sufficiently high setting to get the chip temperature over 100 °C for approximately 24 hours.

3.4. PCB Layout

The Si70xx should be thermally isolated from the equipment connected to it to prevent heat from the equipment from affecting RH. The Si70xx should be thermally immersed in the ambient environment it is intended to sense.

One strategy for accomplishing this is to put the Si70xx on a small PCB and run a ribbon cable to the host processor. The small PCB should be placed away from heat sources and should be placed in the ambient environment as much as possible. That said, even with the hydrophobic filter, keeping dust, liquids and cleaning agents away from the sensor is required.

3.5. Design and Bring-Up Checklist

- ☐ Be sure the sensor is placed away from heat sources and exposed to the environment being measured.
- ☐ Prevent the active area of the sensor from being exposed to liquids, dust, and other contaminants as well as sunlight or other UV sources. The optional filter cover available with Si70xx parts serves this purpose and is compatible with soldering.
- ☐ Generally, avoid the use of ground planes around the Si70xx, which could conduct heat from external sources. Route the ground connection.
- ☐ Do not connect unused pins. Make sure the CSb pin of the Si7015 is low prior to starting I^2C communications.
- ☐ The Si7005 should not be on the same bus as other I^2C devices when it is active. It acknowledges data bytes that match its address. This issue has been resolved with other members of the Si70xx family
- ☐ Be sure to meet all of the timing and level requirements of the device. The Si7005 can tolerate SDA or SCL higher than V_{DD} and has 8.5 mA drivers. The Si7006, Si7013, Si7020, and Si7021 have 2.5 mA drivers and do not tolerate I^2C pins higher than V_{DD}. The Si7034 is a 1.8 V part but can tolerate 3.3 V on its inputs. It's drive strength is 1.5 mA. See also application note, “AN883: Low-cost I^2C Level Translator” for a low cost I^2C level translator circuit.
- ☐ Route the I^2C signals away from analog nodes and noisy digital nodes.
- ☐ Use 0.1 µF bypass capacitors on V_{DD} placed close to the sensor.
- ☐ Pay careful attention to I^2C protocols, such as start and stop conditions, the repeated start of a read transaction, and proper treatment of the Acknowledge bit.
- ☐ Allow adequate time for initialization (per data sheet).
- ☐ If the optional thermistor sensing of Si7013 is used, make sure the thermistor is thermally isolated. If there are long leads to the thermistor, use a twisted pair. Avoid noise pick up; use either a shield or capacitive filter.

3.6. Si70xx Self Test

The following steps define a reliable test of the Si7006, Si7013, Si7020, Si7021, and Si7034 family that uses the integrated heater:

1. Read and write all I^2C registers checking for expected values and capability of modifying where appropriate
2. Perform an RH and temperature measurement.
3. Turn on the heater and wait 60 seconds.
4. Check for delta temperature with heater on. This can be adjusted changing the heater setting. A setting of 0x3 will give over 3 °C.
5. Check for delta RH is > RHinitial 4x (delta temperature in °C).

3.7. ESD Considerations

It is desirable to expose the Si70xx sensor to the environment. For the sensor to respond to the environment there must be a way for the air being sensed to reach the sensor (the environmental access port). This means that the sensor may also be exposed to ESD as specified in IEC 61000-4-2 with ESD peak voltage of up to ±15 kV.

For the humidity sensors, when the cover is not used and the ESD source is directly over the package opening, it is possible for ESD to arc into the sensor area and cause damage. This can be avoided by using of the Silicon Labs filter cover or by placing the Si70xx so that the sensor opening is offset from the environmental access port.

The above approaches will prevent ESD discharge into the sensor area, but ESD discharge to the leads may still be possible. The best practice for ESD protection of the leads is to arrange the sensor placement and environmental access so that high-level ESD events will preferentially be directed to ground (i.e., have an exposed ground trace or ground shield closer to the environmental access port than the sensor). If grounded, a metal case is used; this is also effective for ESD protection.

If it is not possible to protect the leads of the device from ESD, unused leads should be connected to VDD. High-quality ESD protection diodes can be used on leads that have signals on them. The ESD protection device should be rated for more than 15 kV immunity and should limit ESD voltage peaks to less than 10 V. Some examples that have been tested include Vishay MSP3V3 and COMCHIP CPDQ3V3U-HF.

4. Humidity and Temperature Sensor Special Handling Considerations

4.1. Product Storage

The Si70xx are shipped in sealed anti-static bags. The sensors may be stored in a humidity and temperature controlled (RH: 20% to 60%, Temp 10 °C to 35 °C) environment for up to one year after being removed from the bag prior to assembly (the moisture sensitivity rating is MSL2). Do not store the humidity sensors in polyethylene bags (typically blue, yellow, or pink) because these emit gases that can affect the sensor. Metallic, anti-static, sealable, moisture-barrier bags are recommended for storage. Do not use sealants or tapes to seal inside the packaging.

4.2. Use of Conformal Coating and Under-Fill Materials

Use of conformal coating or under-fill material is possible with the following cautions:

- Conformal coatings and under-fill material must not be allowed to come directly in contact with the humidity sensing layer of the Si70xx as they will adhere to the polyimide film and cause a permanent shift in the humidity sensor readings. Even very small particles can have a significant effect.
- Generally, materials that outgas or give off an odor have the potential to affect sensor performance. Following are general recommendations to avoid humidity sensor drift from fumes:
  - Cover the Si70xx during the application process with a cover that forms a seal on the device such as Kapton™ KPPD-1/8 polyimide tape.
  - The optional Silicon Laboratories protective cover will not block fumes, but it will block liquids and particles. It may be effective if the fume concentration is not high.
  - Use low volatile organic compound (VOC) materials.
  - Immediately cure the material in a well-ventilated environment.

We recommend that a test run be performed to measure humidity in a controlled chamber before and after the coating process to make sure no shifts are occurring. If a humidity-controlled test chamber is not available, perform a side-by-side test with one board coated and one board not coated. These cautions are consistent with all polyimide-based relative humidity sensors. In general, if a process has been qualified with a similar part from a different vendor, it will be acceptable for the Si70xx devices.

4.3. Assembly Flow

Limit soldering iron rework to five seconds per lead, for compete rework use a new sensor as manual removal and soldering can shift senor accuracy outside of data sheet limits. Avoid the use of hot air rework tools.

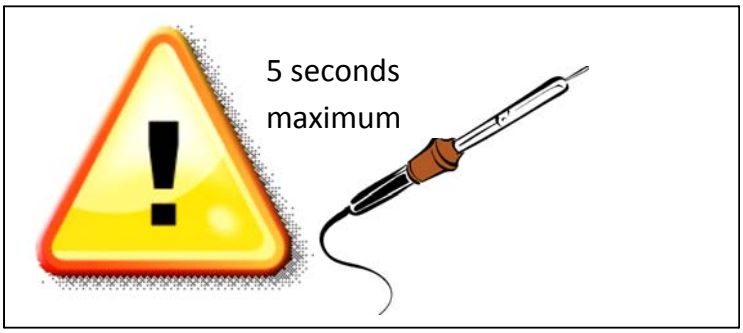

Figure 8. Limit Solder Rework to Five Seconds or Less

The humidity sensor opening should generally be covered during soldering to prevent flux from getting on the sensor surface. Further it is recommended that the Si70xx only be soldered with standard reflow (no hand soldering or hot air tools). The hydrophobic filter is compatible with standard reflow soldering. If the hydrophobic filter cover is not used, Kapton tape will serve the same purpose, although it has to be removed after soldering. Soldering iron touch-up is possible if liquid flux is not needed and care is taken to avoid excessive heating (five seconds per lead). If complete rework is needed, the recommended method is to use a new part and reflow the entire board.

The Si70xx filter cover is compatible with standard reflow soldering. It provides lifetime protection against dust and liquids and should not be removed after soldering.

Figure 9. Do Not Remove Si70xx Protective Cover

The reflow should follow JEDEC standards for lead free solder and reflow with a peak temperature of less than 260 ºC. “No clean” solder paste should be used. The use of an ultrasonic bath with alcohol for cleaning after soldering is specifically not recommended. The Si70xx sensor opening must be kept clean and free of particulates during assembly; the pre-installed white filter cover will protect the opening from particulates. Ensure the sensor opening does not come into contact with conformal coatings. Do not expose the Si70xx to volatile organic compounds or solvents. If installed, do not remove the white filter cover from the devices.

The use of water-soluble flux and water rinse after soldering is permissible if done with care. The use of DI water is recommended. If the hydrophobic cover is used, a spray pressure of less than 40 PSI will prevent water entry into the cover. Without the cover, care would need to be taken to avoid particles from the water or from blow drying to contaminate the sensor area.

The high-temperature soldering process will introduce a recoverable shift in the sensor indication. Generally, accuracy will be back within tolerance limits within 48 hours of soldering if the sensor is stored in normal ambient conditions with ~50%RH.

4.4. Sensor Sensitivity to Chemicals and Vapors

The Si70xx is sensitive to many chemicals and fumes. Notably, household cleaning agents, such as ammonia, are known to cause sensor readings to drift. To maintain accuracy of the SI70xx, avoid exposure to chemical fumes and contaminants.

- Inert dust (e.g., talc) is essentially benign.
- Excessive amounts of dust can slow response.
- Contaminants or particles embedded in the polyimide can affect the RH accuracy.
- Certain polyethylene bags will outgas and damage the sensor.
- Bleach, hydrogen peroxide, ammonia, and other chemicals can affect or damage the sensor.

4.5. Recovering Calibration after High Humidity or Chemical Exposure

Typically, initial accuracy can be recovered by baking the sensor at 125 °C for 12 hours followed by ~2 days storage period in normal ambient conditions with ~50%RH. High RH exposure (i.e., 75% RH for 12 hours) will accelerate the post-bake recovery, but, after high RH exposure, approximately two days at normal RH is still recommended for the device to fully recover its accuracy.

4.6. Relative Humidity Sensor Accuracy

To determine the accuracy of a relative humidity sensor, it is placed in a temperature and humidity controlled chamber. The temperature is set to a convenient fixed value (typically 25–30 °C) and the relative humidity is swept from 20 to 80% and back to 20% in the following steps: 20% – 40% – 60% – 80% – 80% – 60% – 40% – 20%. At each set-point, the chamber is allowed to settle for a period of 30 minutes before a reading is taken from the sensor. Prior to the sweep, the device is allowed to stabilize to 50%RH. The solid trace in Figure 10, “Measuring Sensor Accuracy Including Hysteresis,” shows the result of a typical sweep.

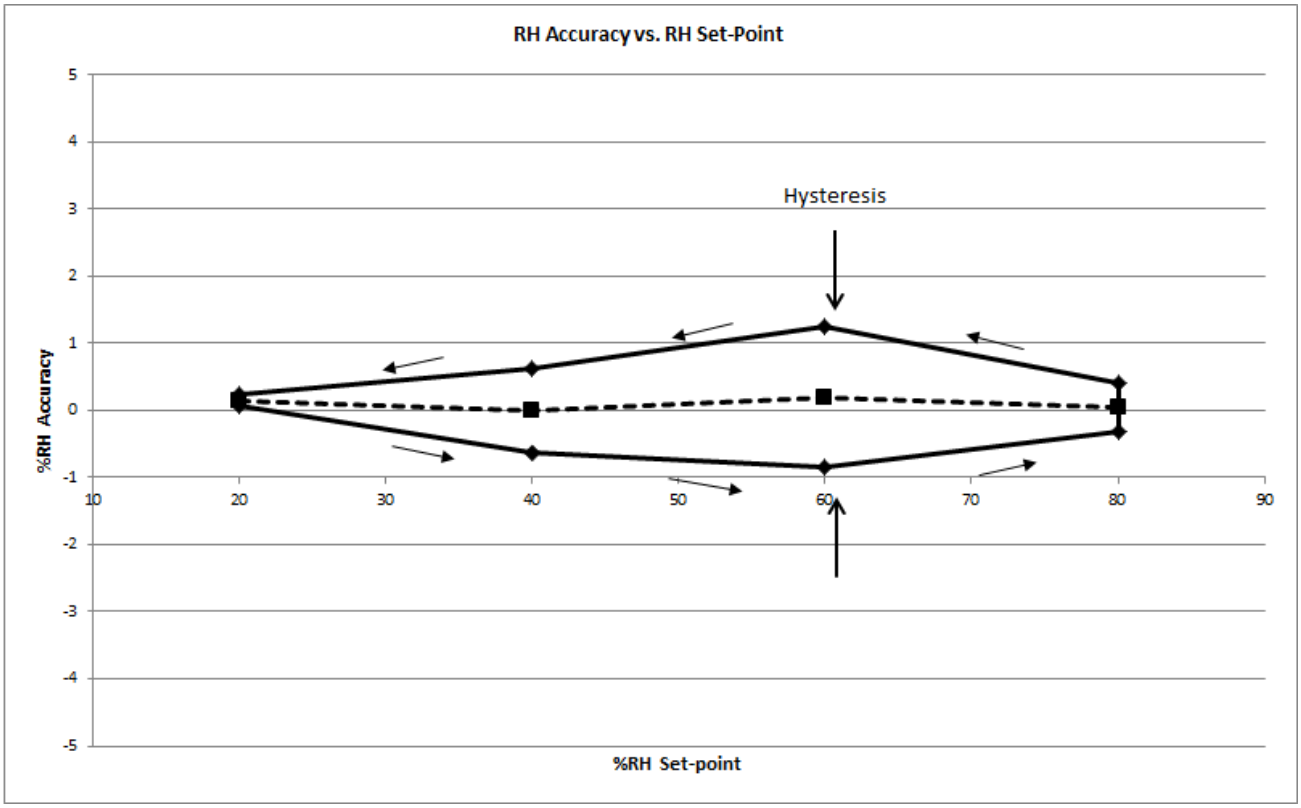

Figure 10. Measuring Sensor Accuracy Including Hysteresis

The RH accuracy is defined as the dotted line shown in Figure 10, which is the average of the two data points at each relative humidity set-point. In this case, the sensor shows an accuracy of 0.25%RH. The Si70xx accuracy specification includes:

- Unit-to-unit and lot-to-lot variation
- Accuracy of factory calibration
- Margin for shifts that can occur during solder reflow

The accuracy specification does not include:

- Hysteresis (typically ±1%)
- Effects from long term exposure to very humid conditions
- Contamination of the sensor by particulates, chemicals, etc.
- Other aging related shifts ("Long-term stability")
- Variations due to temperature. RH readings will typically vary with temperature by less than ± 0.05% ° C.

4.7. Hysteresis

The moisture absorbent film (polymeric dielectric) of the humidity sensor will carry a memory of its exposure history, particularly its recent or extreme exposure history. A sensor exposed to relatively low humidity will carry a negative offset relative to the factory calibration, and a sensor exposed to relatively high humidity will carry a positive offset relative to the factory calibration. This factor causes a hysteresis effect illustrated by the solid trace in Figure 10. The hysteresis value is the difference in %RH between the maximum absolute error on the decreasing humidity ramp and the maximum absolute error on the increasing humidity ramp at a single relative humidity setpoint and is expressed as a bipolar quantity relative to the average error (dashed trace). In the example of Figure 10, the measurement uncertainty due to the hysteresis effect is ±1.0%RH.

4.8. Prolonged Exposure to High Humidity

Prolonged exposure to high humidity will result in a gradual upward drift of the RH reading. The shift in sensor reading resulting from this drift will generally disappear slowly under normal ambient conditions. The amount of shift is proportional to the magnitude of relative humidity and the length of exposure. In the case of lengthy exposure to high humidity, some of the resulting shift may persist indefinitely under typical conditions. It is generally possible to substantially reverse this effect by baking the device as described in the following section.

4.9. Bake/Hydrate Procedure

After exposure to extremes of temperature and/or humidity for prolonged periods, the polymer sensor film can become either very dry or very wet, in each case the result is either high or low relative humidity readings. Under normal operating conditions, the induced error will diminish over time. From a very dry condition, such as after shipment and soldering, the error will diminish over a few days at typical controlled ambient conditions, e.g., 48 hours of 45 ≤ %RH ≤ 55. However, from a very wet condition, recovery may take significantly longer. To accelerate recovery from a wet condition, a bake and hydrate cycle can be implemented. This operation consists of the following steps:

- Baking the sensor at 125 °C for ≥ 12 hours
- Hydration at 30 °C in 75% RH for ≥ 10 hours

Following this cycle, the sensor will return to normal operation in typical ambient conditions after 48 hours.

5. An Introduction to Humidity

Atmospheric air normally contains water vapor and can be thought of as a mixture of ideal gasses. Dry air (no moisture content) is the combination of approximately (on a mole basis) 78.09% N2, 20.95% O2, 0.93% Ar and 0.03% CO2 and trace elements. The amount of water vapor found in air depends on available liquid water (or ice), temperature, pressure and ranges from nearly zero to the point of saturation called “dew point (frost point)”. Water vapor enters the air by evaporation due to the vapor pressure of water or ice.

5.1. Vapor Pressure

There are a few key concepts to keep in mind when discussing vapor pressure. Pure water vapor pressure, p, is due to water vapor pressure over water or ice without the presence of other gases such as air. In combination with air, the actual water vapor pressure is increased by a dimensionless factor referred to as a water vapor enhancement factor, f. This factor is a weak function of temperature and pressure and is approximately 0.47% at sea level and 20 °C. The actual vapor pressure of water vapor, p', is the pure water vapor pressure, p, multiplied by the enhancement factor, f.

$$p' = pf = p(1.0047)$$

Dalton's law states that the total pressure of a mixture of gasses is equal to the sum of the partial pressures of each component gas and assumes the combination of gasses behaves like an ideal gas. In an ideal gas mixture such as air, the total pressure is the sum of the partial pressures of each gas. The pressure of air at any point can be calculated as follows.

$$p = p_{N2} + p_{O2} + p_{H2O} + p_{Ar} + p_{CO2}$$

Note that p_{H2O} is the actual vapor pressure of water in air referred to as p'.

There are several useful equations when working with vapor pressure. The best one to use depends on the available information you have about the problem you need to solve, the range of conditions for the problem the degree of accuracy required and the computational resources available. These equations and their range of application are discussed in detail in appendix B. Pressures referred to in this document are absolute (not gauge) unless otherwise specified.

5.2. Temperature

The relative humidity value can change significantly with even slight variations in temperature. For example, a 1 °C change in temperature at 35 °C and 75% relative humidity will introduce a –4% RH change. A higher temperature increases the ability of air to absorb moisture and a lower temperature decreases the ability of air to absorb moisture. Temperature changes can introduce moisture variations in an air mass if condensation occurs or through secondary impacts such as changing the moisture absorption or desorption of environmental materials in an enclosure. For humidity sensors that respond in proportion to relative humidity and not absolute humidity, the issue of temperature measurement error is not significant unless conversion to dew point, absolute humidity or any other measurement of water vapor in the air is required. In the case of a dew point calculation, a 1 °C error in the measurement of the temperature will produce approximately a 1 °C error in the calculation of the dew point. This temperature dependency not only emphasizes the importance of accurate temperature measurement, it also highlights the necessity of thermal stability, which can be difficult to achieve. Even if the temperature and humidity measurements are taken in relatively close proximity, there can be considerable differences in corresponding levels of humidity and temperature. To achieve the most accurate measurement it is best if the humidity and temperature measurements are taken as close as possible to each other—ideally co-located on the same chip.

5.3. Evaporation

The average energy of molecules in a liquid is directly proportional to temperature. The vapor pressure of water will increase as it is heated. When it reaches 100 °C at sea level, the vapor pressure will equal the atmospheric pressure (approximately 760 Torr or 101.325 kPa) and the water will boil. The energy (vapor pressure) of water molecules in an open partially filled container of liquid water (or ice), Figure 11, is such that some of the molecules have enough energy to escape the attractive forces holding the water together and evaporate into the atmosphere. Eventually all of the water will evaporate assuming the air is not saturated. If the container is sealed, Figure 12, water molecules will evaporate into the air space above the water and some of the evaporated water molecules will condense back into the liquid water. The rate of evaporation will exceed the rate of condensation until the air above the water becomes saturated with water vapor. Once the air is saturated the rates of evaporation and condensation will be equal (the vapor pressure will equal the saturation pressure inside the closed container). Evaporation takes place at the surface of the liquid while boiling can take place throughout the volume of the liquid.

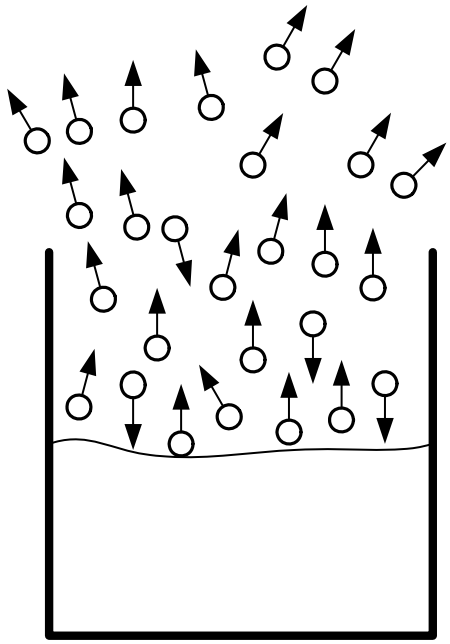

Evaporation > Condensation
Humidity in the open air is increasing

Figure 11. Water in Open Container

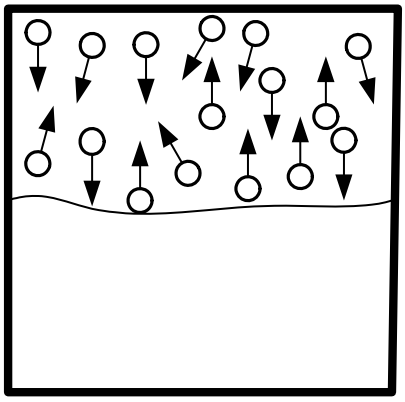

Evaporation = Condensation
Saturated vapor

Figure 12. Water in Closed Container

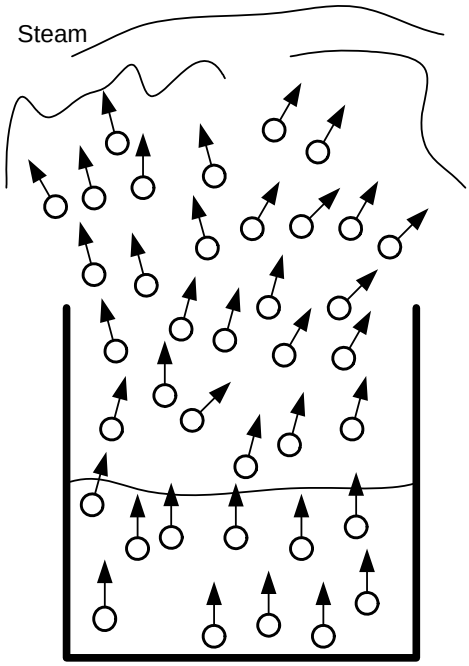

p'>P
Evaporation >>> Condensation
Humidity in the open air is increasing

Figure 13. Water Boiling

Boiling starts at the liquid surface when the vapor pressure equals the atmospheric pressure. As temperature increases, bubbles form below the surface as the vapor pressure increases to equal the atmospheric pressure plus the additional pressure due to the weight of the column of liquid above the bubble. As temperature and vapor pressure continue to increase, bubbles will form throughout the entire volume of liquid as shown in Figure 13. Water vapor is completely absorbed into the air which can cause the air in close proximity to the boiling water to become locally saturated. Visible steam consists of very small water droplets which have condensed out of this localized super-saturated air.

6. How Humidity is Quantified

Humidity represents the amount of water vapor contained in the air and can be quantified in many ways. Several of the terms describing humidity are defined differently for meteorology applications and thermodynamics or chemical engineering applications. For this reason, it is important to understand the context of the application. The following is a brief description of the most common terms for quantifying humidity.

6.1. Absolute Humidity

Absolute humidity in the context of meteorological applications, sometimes referred to as “volumetric humidity”, is defined as the mass of water vapor dissolved in a total volume of moist air at a given temperature and pressure. Typical units are g/m3 or kg/m3. The value of absolute humidity defined in this manner changes with temperature and pressure and is inconvenient to use in many engineering applications.

Absolute humidity for use in thermodynamics or chemical engineering applications is defined as the ratio of water vapor mass to dry air mass. Typical units are kg/kg. Other names for this ratio include mass mixing ratio, humidity ratio, mass fraction or mixing ratio. This quantity is simpler to use and more accurate for mass balance or heat calculations. Due to the conflicting definitions of absolute humidity, caution is required when using this term.

6.2. Specific Humidity

Specific humidity, Yw, can be defined for meteorology applications as the ratio of water vapor mass per mass of moist air expressed as g/kg or kg/kg. Specific humidity is constant with changes in temperature and pressure for conditions above the dew point and is a useful quantity in meteorology. The rate of evaporation of water is directly proportional to specific humidity.

6.3. Relative Humidity

Relative humidity is the ratio of actual water vapor present in air with the amount of water vapor that would be present in air at saturation, expressed as a percentage. The official symbol for relative humidity is Ψ although RH, %RH, rh, or %rh are commonly used. Relative humidity can be expressed as the ratio of the actual vapor pressure, p', to the saturation vapor pressure, p_S', at a constant temperature over a plane of liquid water.

$$RH\ (\%) = p'/(p_S') \times 100$$

6.4. Dew Point

Upon heating, the capacity of air to absorb moisture increases. Consequently, the relative humidity of air decreases as the air is heated. Conversely, as moist air is cooled, its capacity to absorb moisture decreases and relative humidity increases. The dew point is the temperature, assuming constant pressure, moist air is saturated (reaches 100% relative humidity) and cannot absorb additional water. As the temperature is decreased past the dew point, moisture condenses until the air is saturated (reaches 100% relative humidity) at the new lower temperature.

6.5. Frost Point

Frost point is the same as dew point over solid ice where the condensate is frost instead of liquid water.

7. Humidity Measurement

For relative humidity measurements, it is not necessary to measure the ambient temperature unless you are using a psychrometer. However, to determine the dew point or absolute humidity, the ambient air temperature is required. Accurate air temperature measurements can be a significant challenge, since air is a poor thermal conductor and the temperature at any given point can be impacted by air currents and temperature gradients. It is very important to understand the dynamics of your measurement system and the dynamics of the environment being measured. Before taking a measurement, you always need to wait long enough to ensure the temperature and humidity are stable and the sensor(s) of the measurement instrument are in equilibrium with the ambient conditions to be measured.

A wide range of techniques are employed to measure humidity. These range from simple mechanical indicators, to highly complex and expensive analytical instruments. In general, measuring humidity (dew point, absolute humidity, specific humidity, mixing ratio, relative humidity or equivalent wet bulb temperature) is not a trivial task. Many of the instruments currently available have poor accuracy, narrow-bandwidth, contamination issues, hysteresis and measurement drift over temperature and time. Regular calibration is required on some instruments, which is both inconvenient and expensive. Some instruments are large, awkward, and expensive. Discussed below, are different methods of humidity sensing. The new generation of humidity sensor technology used in Silicon Labs' solid state humidity sensors provide superior accuracy, minimum drift, low cost, low power, small size and ease of use.

7.1. Psychrometer

A psychrometer is the oldest method for measuring humidity more commonly known as the wet bulb/dry bulb method. A psychrometer consists of two thermometers, one with an ordinary dry bulb and the other with a moist cloth covering the bulb (wet bulb). Evaporation from the moist cloth lowers the wet bulb thermometer's temperature. The wet-bulb thermometer shows a lower temperature, Twb, than the dry-bulb thermometer, Tdb, if the air is not saturated with water vapor. The temperatures are the same in saturated air. The amount of evaporation is dependent on the relative humidity of the air (more evaporation and lower Twb with lower RH). Given the dry bulb and wet bulb temperatures the relative humidity is looked up on a psychrometric chart. For example, at sea level if Tdb = 25 °C and Twb = 18 °C, RH = ~50%. Looking up the %RH on a chart for every measurement is both time-consuming and cumbersome but can be automated with a microcontroller. A psychrometric sensor can achieve good precision with %RH resolutions of 0.01% for humidity ranges from 10–100% at temperatures from 0 to 60 °C, and accuracy of 1%. The disadvantages of a psychrometric sensor are a slow response time, large physical size, the need to keep one thermometer bulb wet, the need to have airflow around the wet bulb, and high cost.

7.2. Chilled Mirror Hygrometers

The chilled mirror hygrometer is considered the most accurate and reliable hygrometer. Chilled mirror hygrometers use a cooled mirror with an optoelectronic mechanism to detect condensation on the mirror surface at an accurately measured temperature. The system is configured to reflect LED light off a mirror at an angle of approximately 45 degrees with a photo-transistor detecting the reflected light. The temperature of the mirror is electronically controlled, typically with a Peltier-effect device. The system works by cooling the mirror's surface below ambient temperature until condensation forms, causing the LED's light to scatter resulting in a sudden drop in the output of the photo-transistor. The surface temperature of the mirror is read using an accurate temperature sensor such as a thermistor. The temperature at which condensation forms is the dew point. All humidity values can be calculated from the dew point. The mirror temperature can be controlled with a feedback loop to continuously track the dew point. The chilled mirror is the most stable and accurate method to determine relative humidity. However, it is crucial to keep the mirror clean, provide a method of clearing the condensation and to ensure that the temperature sensor and mirror are of high quality. This method operates over the full humidity range (0-100%RH) and can be used for numerous gases at many pressures. Chilled mirror hygrometer instruments are bulky and very expensive.

7.3. Mechanical Hygrometers

Mechanical hygrometers use sensing elements relying on a mechanical property of the sensor varying with humidity. The most common example is the animal hair hygrometer, which uses a piece of animal hair kept under tension. As humidity increases the hair becomes more flexible and stretches. A strain gage monitors the displacement caused by the hair stretching with a change in the moisture content of the air. The output of the strain gage is directly proportional to the relative humidity and is usually indicated on a mechanical meter. Mechanical hygrometers are generally compact, light weight, reliable, and inexpensive. Accuracies, however are in the ±10% range.

7.4. Electronic Humidity Sensors

Electronic humidity sensors typically use either a change in resistance or capacitance to measure humidity. These sensors have become a popular choice because technology advances have made them accurate, compact, stable and low power. A capacitive sensor consists of two electrodes, separated by a dielectric. As the water vapor in air increases or decreases, the sensor's dielectric constant changes producing a higher (or lower) capacitance measurement corresponding to the humidity level. A resistive sensor consists of two electrodes, separated by a conductive layer. As the humidity in the air increases (or decreases) the conductivity of the sensing layer changes, altering the resistance between the two electrodes. New techniques for producing thin films have made these types of sensors, accurate, stable, and easy to manufacture in large quantities. The choice of material assures fast response times with little hysteresis. The accuracy of electronic sensors is limited by their drift over time caused by wide variations in temperature and humidity or the presence of pollutants.

The Si70xx humidity senors use a MiM capacitor as the reference and perform a high-accuracy 24-bit conversion using a sigma delta conversion approach. Each part is factory calibrated for capacitance to RH with a minimum offset and slope correction. Later members of the family include non-linearity correction and temperature compensation.

Silicon Laboratories humidity sensors use the capacitance change due to moisture absorption of a polyimide film to sense humidity. The polyimide film is deposited over a metal finger capacitor and exposed to the ambient via an opening in the package. The polyimide material and sensing capacitor has been selected for excellent stability. An optional expanded polytetrafluoroethylene (ePTFE) hydrophobic filter provides protection against dust and most liquids.

The polyimide film is thin (<5 µm) and very responsive to humidity (response time of less than 10 seconds). The hydrophobic filter has little impact on the response time.

While the Si70xx sensors are largely conventional, mixed-signal CMOS integrated circuits, relative humidity sensors in general, and those based on capacitive sensing using polymeric dielectrics in particular, have unique application and use requirements that are not common to conventional (non-sensor) ICs. Chief among those are:

- The need to protect the sensor during board assembly, i.e., solder reflow, and the need to subsequently
- Rehydrate the sensor.
- The need to protect the senor from damage or contamination during the product life-cycle.
- The impact of prolonged exposure to extremes of temperature and/or humidity and their potential effect on
- Sensor accuracy.
- The effects of humidity sensor “memory”.

Each of these items is discussed in more detail in the following sections.

8. Humidity Control for Thermal Comfort

8.1. General Considerations

Humans are sensitive to humid air, because the human body uses evaporative cooling as the primary mechanism to regulate temperature. When the relative humidity and dew point are high, the rate of perspiration evaporation from the skin decreases because the amount of water vapor in the air is already close to saturation. Because humans perceive the rate of heat transfer from the body, rather than temperature itself, we feel warmer when the relative humidity is high. Relative humidity is a useful indication of how hot the weather “feels” and is more intuitive and easier to measure than other quantifications of water vapor in the air. Air conditioners are designed to maintain between 40–60% relative humidity in the occupied space.

Table 1. Human Reaction to Humidity*

Dew Point Temp (°F)	RH at 90°F	Human Perception
> 75	> 62%	Extremely uncomfortable
70 to 74	52% to 60%	Quite uncomfortable
65 to 69	44% to 52%	Somewhat uncomfortable
60 to 64	37% to 46%	Comfortable but humid
55 to 59	31% to 41%	Comfortable
50 to 54	31% to 37%	Very comfortable
< 49	< 30%	A bit dry
***Note:** See Lawrence, Mark G., “The Relationship between Relative Humidity and the Dewpoint Temperature in Moist Air—A Simple Conversion and Applications”, American Meteorological Society February 2005.		

Humans tend to react with discomfort to dew points >61 °F (16 °C). The body perspires and produces sweat to cool down. High relative humidity and consequently a high dew point prevent the evaporation of sweat and reduce evaporative cooling. The body may overheat, resulting in discomfort.

Lower dew points, <50 °F (10 °C), generally correlate with lower ambient temperatures requiring the body to be less dependent on evaporative cooling. A lower dew point can be achieved with a high temperature at extremely low relative humidity allowing for effective cooling.

8.2. Heat Index

The heat index (HI), also called “apparent temperature” combines air temperature and relative humidity to estimate how “hot” a human will perceive the ambient conditions to be. The heat index is calculated for ambient temperatures above 27 °C (81 °F) and dew points above 12 °C (54 °F) (relative humidity above 40%). Heat index is calculated with the following equation[2].

$$HI = -42.379 + (2.04901523T) + (10.14333127RH) - (0.22475541TRH) - (6.83783 \times 10^{-3}T^2)$$
$$-(5.481717 \times 10^{-2}RH^2) + (1.22874 \times 10^{-3}T^2RH) + (8.5282 \times 10^{-4}TRH^2) - (1.99 \times 10^{-6}T^2RH^2)$$

Where:

HI = Head Index in degress Farenheit

T = Ambient temperature in degrees Farenheit

RH = Relative humidity in %

1. www.shorstmeyer.com/wxfaqs/humidity/humidity.html
2. www.srh.noaa.gov/images/epz/wxcalc/heatIndex.pdf
3. www.crh.noaa.gov/pub/heat.php

8.3. Wind Chill

Wind chill, also called wind chill temperature, wind chill factor or wind chill index, expresses the perceived air temperature on skin exposed to wind. Wind chill is defined for temperatures at or below 10 °C (50 °F) and wind speeds greater than 4.8 kilometers/hour (3.0 mph). Wind chill is calculated by the following equations[4].

$$T_{wc} = 35.74 + 0.6215T_a - 35.75V^{0.16} + 0.4275T_aV^{0.16}$$

Where:

T_{wc} = Wind chill temperature in degrees Farenheit

T_a = Ambient temperature in degrees Farenheit

V = Wind velocity in miles-per-hour

Table 2. Human Reaction to Heat Index, HI, in Shady Light Wind Conditions*

Heat Index, HI, °F	Human Impact
80 to 90	Fatigue possible with prolonged exposure and physical activity
90 to 105	Sunstroke, heat cramps and heat exhaustion are possible
105 to 130	Sunstroke, heat cramps and heat exhaustion likely. Heat stroke possible
> 130	Heat stroke is highly likely with continued exposure
***Note:** See www.crh.noaa.gov/pub/heat.php.	

4. http://web.uvic.ca/~eos340/wind_chill.pdf

8.4. Thermal Stress

Heat index and wind chill are a measure of how the temperature is perceived by humans and can be referred to collectively as “apparent temperature” or “relative outdoor temperature”.

The human body looses heat by conduction and convection. The rate of heat loss by the body depends on the amount of exposed skin and the wind speed. The human body responds to heat loss by attempting to maintain its surface temperature. Rapid heat loss results in both the perception of lower temperatures and an actual greater heat loss as the body attempts to maintain body temperature on exposed skin increasing the risk of hypothermia, frostbite and death.

Table 3. Wind Chill Temperature Chart*

V\T_a	40 °F	30 °F	20 °F	10 °F	0 °F	–10 °F	–20 °F	–30 °F
10 mph	34	21	9	–4	–16	–28	–41	–53
20 mph	30	17	4	–9	–22	–35	–48	–61
30 mph	28	15	1	–12	–26	–39	–53	–67
40 mph	27	13	–1	–15	–29	–43	–57	–71
50 mph	26	12	–3	–17	–31	–45	–60	–74

***Note:** The shaded area indicates a danger of frostbite.

8.5. Environmental Quality

Traditionally an environment was controlled based on a temperature measurement. In recent years the relative humidity measurement has become just as important. Humidity control is especially important in living, storage, and manufacturing sites. Control of temperature and relative humidity is also critical in the preservation of many materials including medication, food, fabric and wood products. Unacceptable levels of temperature and/or relative humidity contribute significantly to the breakdown of materials. Heat accelerates deterioration, whereas high relative humidity provides the moisture necessary, to promote harmful chemical reactions and, in combination with high temperature, encourages mold growth and insect activity. Extremely low relative humidity, which can occur in winter in centrally heated buildings, may lead to desiccation of some materials causing them to become brittle. Large fluctuations in temperature and relative humidity are damaging due to expansion and contraction which can accelerate deterioration. Installation and operation of adequate climate controls to meet preservation standards will retard the deterioration of materials considerably, while maintaining a comfortable environment for humans. For example, luthiers recommend keeping fine wooden musical stringed instruments such as violins, cellos and guitars at a RH between 45% and 55% and temperatures between 16 °C (55 °F) to 21 °C (70°F) to prevent warping and splits in the wood. The ideal temperature and relative humidity will vary depending on the material and application. Typically, a steady temperature of 16 to 21°C and a relative humidity between 30% and 60% suffices for many applications. Low power battery operated temperature and humidity sensors can be used to monitor conditions during shipment or storage for food and a variety of other materials.

APPENDIX A—INDUSTRY SPECIFICATIONS AND GUIDELINES

- A.1 ANSI/ASHRAE Standard 55
- A.2 BS1339
- BS 1339-1:2002 Part 1: Terms, definitions and formulae
- BS 1339-2:2009 Part 2: Humidity calculation and tables - User guide
- BS 1339-3:2004 Part 3: Guide to the measurement of humidity
- U.K. National Physics Laboratory Guide to RH Measurement
- http://www.npl.co.uk/publications/good-practice-online-modules/humidity/

The following topics can be found on Wikipedia:

- Relative Humidity
- Dew Point
- I^2C
- IP Rating
- Polymers
- Wave Soldering

Si70xx certificate of compliance (with web link)

APPENDIX B—EQUATIONS FOR VAPOR PRESSURE AND HUMIDITY CALCULATIONS

Many equations have been developed to express humidity parameter relationships. They can generally be broken down into two groups, those developed from thermodynamic principles and equations empirically derived from experimental data. The Clapeyron and Clausius-Clapeyron equations will be presented as examples of the first group and the Sonntag, Magnus and Antoine equations as examples of empirically derived expressions. The empirically derived expressions are generally easier to use but have limitations to the range of use and accuracy. Approximations may be useful to further simplify calculations and conversions between humidity parameters as long as the limitations imposed by the approximations are fully comprehended. The use of these equations and approximations will be discussed below.

Clapeyron Equation

The Clapeyron equation is based on one of the Maxwell thermodynamic relationships contains no approximations and provides an exact solution. It considers saturation pressure and temperature, the change of entropy associated with a change of phase and the change in volume of the two phases and represents the slope of the vapor-pressure curve. The Clapeyron equation can be expressed as follows:

$$\frac{\partial p'}{\partial T} = \frac{\Delta s}{\Delta v}$$

where:

p' = Saturation Vapor Pressure

T = Temperature in °K

Δs = Entropy Change between the two Phases

Δv = Volume Change

since:

$\Delta s = \frac{\Delta h}{T}$ Across a phase transition

where:

Δh = Enthalpy Change between the two Phases

The Clapeyron Equation can be rewritten as follows:

$$\frac{\partial p'}{\partial T} = \frac{\Delta h}{\Delta v T}$$

The Clapeyron equation is valid for all phase transitions (solid/liquid, solid/gas and liquid/gas) and represents the slope of the phase change boundaries. The parameters in this equation that can be directly measured are temperature, pressure and volume. Entropy and enthalpy can only be measured indirectly in terms of the other parameters.

Clausius-Clapeyron Equation

The Clausius-Clapeyron equation modifies the Clapeyron equation with two simplifying approximations that make this equation useful for ice to water vapor and liquid water to water vapor transitions. The first assumption is that the change in volume from liquid water to gas (water vapor) or solid (ice) to gas (water vapor) is approximately equal to the volume of the gas (water vapor).

$$\Delta V = V_{gas} - V_{liquid} \approx V_{gas}$$
$$\Delta V = V_{gas} - V_{solid} \approx V_{gas}$$

The second approximation is the gas (water vapor) can be treated as an ideal gas.

$$V_{gas} = \frac{nR'T}{P}$$

Incorporating these assumptions in the Clapeyron equation yields the following.

$$\left(\frac{\partial p'}{\partial T}\right) = \frac{\Delta h}{T\frac{nR'T}{p'}} = \frac{\Delta h}{\frac{RT^2}{p'}}$$

Rearranging:

$$\left(\frac{dp'}{p'}\right) = \frac{\Delta h}{RT^2}dT$$

Integrating as an indefinite integral and assuming Δh is constant:

$$\int\frac{dp'}{p'} = \frac{\Delta h}{R}\int\frac{1}{T^2}dT$$
$$\ln(p') + C_0 = \frac{-\Delta h}{R}\left(\frac{1}{T}\right) + C_1$$

Where:

Δh = enthalpy change for phase change which varies between 2.501 x 106 and 2.257 x 106 J/kg in the range of 0–100 °C

R' = universal gas constant

R = specific gas constant for water which is 461.5 J/(K – kg)

Rearranging:

$$p' = C_2 e^{\frac{-\Delta h}{R}\left(\frac{1}{T}\right)}$$

Accuracy is best around the temperature used to calculate C_2.

For example C2 = 2.53 x 10^{11} Pa at 0 °C

Humidity-Related Calculations

While the above expressions are physically based, they are difficult to solve and manipulate. Hence, many approximate formulas have been developed. The two most common are the Antoine Equation and the Magnus equation. Many of these formulas contain coefficients that can vary depending on their source, its age and, in some cases, the context of the equations use.

Antoine Equation

This equation calculates saturation vapor pressure. Additionally; coefficients are available for this equation for a wide variety of vapors other than water. The coefficients used in the following equation are for an air-water system and are optimized for use over the temperature range 0 to 100 °C.

$$p_s = \exp\left(23.19 - \frac{3830}{T - 44.83}\right)$$

$$t_{dp} = \frac{3830}{23.19 - \ln(Ps)} + 44.83$$

Where:

Pressure in Pascals (Nm^{-2})

Temperature in °K (°C + 273.15)

Magnus Equation

This equation calculates saturation vapor pressure as does the Antoine Equation. It has the advantage that it can be easily manipulated to find the dew point (t_{dp}) or frost point.

$$P's = C_1 e^{\left(\frac{A_1 T}{B_1 + T}\right)}$$

Where:

P'_s is pressure in Pascals Nm^{-2}

T is temperature in °C

Over the range of –40 to +50 °C, the best fit constants are as follows:

A_1	B_1	C_1	Reference
17.625	243.04	610.94	Alduchov, Oleg A., Robert E. Eskridge, 1996: Improved Magnus Form Approximation of Saturation Vapor Pressure. *J. Appl. Meteor.*, **35**, 601–609

For air with a vapor pressure P', the dew point is defined as the temperature at which the water vapor would be saturated. Thus,

$$T_d = B_1 \times \frac{\ln\left(\frac{P'}{C_1}\right)}{A1 - \ln\left(\frac{P'}{C_1}\right)}$$

Utilizing the relationship

RH = 100 x P'/P'_s

$$Td = \frac{B_1\left[\ln\left(\frac{RH}{100}\right) + \frac{A_1 T}{B_1 + T}\right]}{A_1 - \ln\left(\frac{RH}{100}\right) - \frac{A_1 T}{B_1 + T}}$$

Equation Comparison

The following graph compares the above equations:

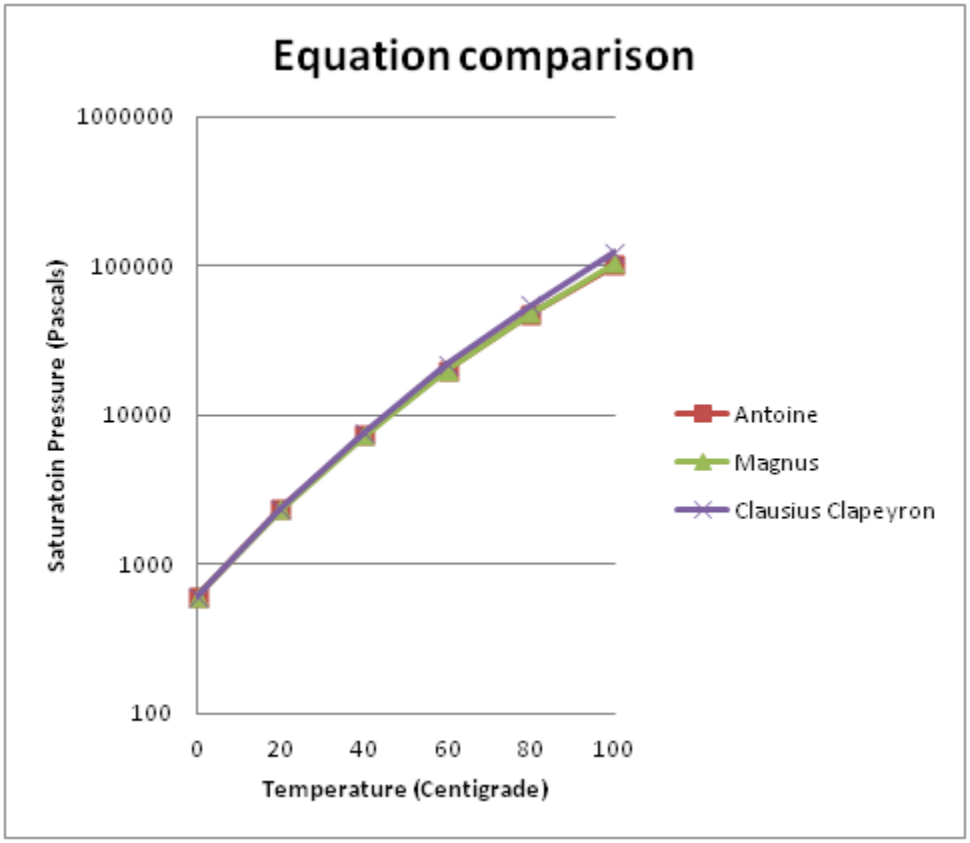

Mark Lawrence Rule of Thumb*

This easy to use equation provides an estimate of change in dew point for a change in relative humidity or can be easily reversed to estimate a change in relative humidity for a known change in dew point. This approximation is valid for RH>50%. This rule of thumb says that the dew point temperature decreases approximately 1C for every 5% decrease in RH starting at tdp = t and RH=100%. This relationship is very handy if very little computational capability is available and the accuracy limitations and range of applicability are acceptable.

***Note:** See Lawrence, Mark G., "The Relationship between Relative Humidity and the Dewpoint Temperature in Moist Air - A Simple Conversion and Applications", American Meteorological Society February 2005.

Estimating RH with Heating

Equation Development

The Magnus equation for partial pressure of water in air is:

$$P = \left(\frac{RH}{100}\right) \times C_1 e^{A_1 \times \frac{T}{(B_1 + T)}}$$

for a given relative humidity RH in percent and temperature in ºC. Typical values for A1, B1, and C1 are 17.625, 243.04, and 610.94, respectively.

If the air is heated, the partial pressure does not change, and the apparent relative humidity drops according to:

$$P = \left(\frac{RH'}{100}\right) \times C_1 e^{A_1 \times \frac{(T + \Delta T)}{(B_1 + T + \Delta T)}}$$

or

$$RH' = RH \frac{e^{\frac{A_1 \times T}{(B_1 + T)}}}{e^{A_1 \times \frac{(T + \Delta T)}{(B_1 + T + \Delta T)}}}$$

this can be simplified to:

$$RH' = RHe^{\frac{-A_1 \times B_1 \times \Delta T}{((B_1 + T)(B_1 + T + \Delta T))}}$$

Linearization

The above equation is still too complex to be useful in simple systems; however, it can be noted that, over a narrow temperature range, the relative humidity error is fairly linear with relative humidity for a given amount of heating and ambient temperature.

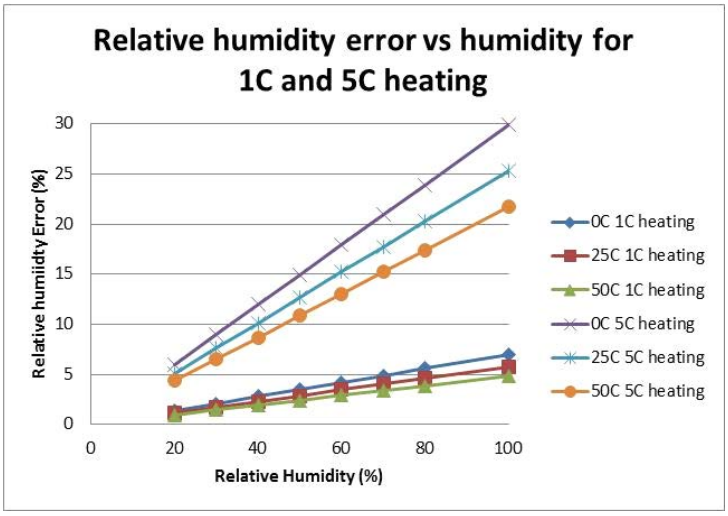

The error is linear with RH and increases by about 5% RH per °C (this is the familiar “Mark Lawrence Rule of Thumb”).

Thus, the actual RH can be estimated fairly accurately by:

$$RH = \frac{RH_{measured}}{(1 - 0.05\Delta T)}$$

The accuracy of this estimate can be improved by measuring the temperature of the RH sensor and correcting for heating to get the ambient temperature.

$$T_{ambient} = T_{measured} - \Delta T$$

For 5 °C heating, the correction factor varies from 0.0598 at 0 °C to 0.0435 at 50 °C ambient or

$$CF = 0.0598 - 0.000346 \times T_{ambient}$$

and finally,

$$RH = \frac{RH_{measured}}{(1 - CF \times \Delta T)}$$

APPENDIX C—TERM, UNIT, AND COEFFICIENT REFERENCE

- **Absolute vapor pressure—**A measure of the actual amount of water present in the air.
- **Dew Point—**For a given RH and temperature, the temperature at which condensation would form if the air were cooled; meaningful as an indicator of comfort.
- **Hydrophobic—**Water repellent/resistant.
- **IP Rating—**Ingress Protection Rating; first digit indicates level of protection against particle; the second digit represents level of protection against liquids.
- **IP67—**An ingress protection rating indicating that the assembly is dust tight (6) and can withstand up to 1 m of water pressure (7).
- **Kapton—**A polyimide film developed by DuPont that is stable over a wide temperature range (up to +400 °C). It is available in sheet, tape, and “dot” form and is used to protect selected components during solder reflow.
- **Oleophobic—**Oil repellent/resistant.
- **Relative Humidity—**Absolute_Vapor_Pressure ÷ Saturated_Vapor_Pressure; expressed as a percentage.
- **Saturated vapor pressure—**The maximum amount of water that the air can hold; dependent on temperature.

Table 4. Common Pressure Unit Conversions

		Divide to Convert						
	Unit	**Pascal (Pa)**	**Hectopascal (hPa)**	**Kilopascal (kPa)**	**Bar (bar)**	**Atmosphere (atm)**	**Torr* (torr)**	**lbf/in^2 (psi)**
Multiply to Convert	Pa	1	$1x10^{-2}$	$1x10^{-3}$	$1x10^{-5}$	$9.8692x10^{-6}$	7.5006×10^{-3}	145.04×10^{-6}
	hPa	100	1	$1x10^{-1}$	$1x10^{-3}$	$9.8692x10^{-4}$	7.5006×10^{-1}	145.04×10^{-4}
	kPa	1000	10	1	$1x10^{-2}$	$9.8692x10^{-3}$	7.5006	145.04×10^{-3}
	bar	100,000	1000	100	1	0.98692	750.06	14.50377
	atm	101,325	1013.25	101.325	1.01325	1	760	14.696
	torr	133.322	1.33322	133.322×10^{-3}	1.3332×10^{-3}	1.3158×10^{-3}	1	19.337×10^{-3}
	psi	6.895×10^{3}	68.95	6.895	68.948×10^{-3}	68.046×10^{-3}	51.715	1
***Note:** 1 torr ~= 1 mmHg								

Temperature Conversions:

$$T_{°C} = \frac{5}{9}(T_{°F} - 32)$$

$$T_{°F} = \left(\frac{9}{5}\right)T_{°C} + 32$$

$$T_{°K} = T_{°C} + 273.15$$

$$T_{°R} = T_{°F} + 459.69$$

Table 5. Humidity Terms and Definitions

Term	Definition	Units
p	Pure water vapor pressure (no air or other gas)	N/m^2 or Pa
p’	Actual vapor pressure (water vapor in air)	N/m^2 or Pa
p_s	Pure water saturated vapor pressure (no air or other gas)	N/m^2 or Pa
p_s’	Actual saturated vapor pressure (water vapor in air)	N/m^2 or Pa
p	Total atmospheric pressure	N/m^2 or Pa
f	Water vapor enhancement factor	dimensionless
d_v	Volumetric humidity mass of water vapor/volume of humid gas	kg/m^3
M_g	Molal mass (molecular weight) of dry gas (air)	kg/mol
M_v	Molal mass (molecular weight) of water vapor	kg/mol
m	mass	kg
n	Amount of substance in moles	mol
R	Universal gas constant in joules per mole of air per K	J/(mol)(K)
R’	Universal gas constant in joules per kilogram of air per K	J/(kg)(K)
S	Percent of saturation	%
Ψ	% Relative humidity (%RH or %rh)	%
Y	Mixing ratio kg vapor/kg dry gas	kg/kg
Yw	Specific humidity kg vapor/kg humid gas	kg/kg
Δh	Enthalpy change between phases h_{ig} Ice → gas h_{if} Ice → liquid h_{fg} Liquid → gas	
Δs	Entropy change between phases	
t_{dp}	Dewpoint temperature	

APPENDIX D—NONLINEAR CORRECTION OF VOLTAGE INPUTS WITH THE Si7013

The Si7013 has the capability to apply a lookup-table-based non-linear correction to voltage measurements. This correction is invoked by writing a “1” to bit 5 of user register 1. Note that humidity measurements should not be performed when this bit is set. In the discussion below, “input” refers to the A/D voltage measurement result, which is a 16-bit signed integer, and “output” refers the output after the non-linear correction, which is assumed to be a 16-bit unsigned integer.

The non-linear correction is based on a 10-point table lookup linearization. Each point consists of the ideal output for a given expected A/D measurement result. Table 6 is stored in the Si7013 memory, which must also have the slope at points 1–9. Slope is multiplied by a scaler of 256.

$$\text{slopeN} = 256 \times \frac{(\text{outputN} + 1 - \text{outputN})}{(\text{inputN} + 1 - \text{inputN})}$$

Only nine of the input/output pairs need to be in the table because the 10th pair is determined by the slope equation. Overall, the Si7013 has 27 16-bit numbers in its table (54 bytes). This table is stored in non-volatile memory of the Si7013 and must be programmed based on the desired look-up table.

The actual output is determined by extrapolation:

```
If in >in2, out = out1+slope1 x (in-in1)/256
  Else if in >in3, out = out2+slope2 x (in-in2)/256
    Else if in >in4, out = out3+slope3 x (in-in3)/256
      Else if in >in5, out = out4+slope4 x (in-in4)/256
        Else if in >in6, out = out5+slope5 x (in-in5)/256
          Else if in >in7, out = out6+slope6 x (in-in6)/256
            Else if in >in8, out = out7+slope7 x (in-in7)/256
              Else if in >in9, out = out8+slope8 x (in-in8)/256
                Else out = out9+slope9 x (in-in9)/256
```

The table must be arranged in order of decreasing input values. The table is entered into memory addresses 0x82–0xB7 one byte at a time.

Table 6. Memory Location Descriptions

Memory Location	Description
0x82	MSB of in1
0x83	LSB of in1
…	…
0x93	LSB of in9
0x94	MSB of out1
…	…
0xA5	LSB 0f out9
0xA6	MSB of slope1
…	…
0xB7	LSB of slope9

The table itself is user-programmed, and, by default, all table values are 0xFF. It should be noted that, once the non-linear correction data is saved to memory, it cannot be overwritten.

As an aid to calculation of the table, several tools have been developed.

- A spreadsheet, “Si7013 Thermistor Correction Calculator.xlsx”, is available under the Miscellaneous section of the Sensors Documentation page at http://www.silabs.com/support/pages/document-library.aspx?p=Sensors. This spreadsheet calculates the expected output of the A/D based on an assumed thermistor and biasing circuit (the NCP18XH103F03RB thermistor used on Si7013 evaluation boards with 24.3 kΩ biasing resistors). Then, based on the desired output after linearization (In this case, output = (temperature + 46.85) x 65536/175.72), the slope is calculated. Finally, the spreadsheet calculates the hexadecimal values that should go in memory locations 0x82–0xB7 based on the input/output and slope values.
- The Si7013 evaluation board has the option of trying different values of linearization based on numbers entered in a GUI. These values can be saved to file or burned into the Si7013 memory. For example:

For the Si7013 evaluation board with a 10 kΩ thermistor and two 24.3 kΩ bias resistors, and assuming the A/D conversion is done using VDD as a reference with buffered inputs, the ideal input voltage version temperature is:

Vin = VDD x Rthemistor/(Rthermisor + 46.4 kΩ)

Since VDD is also the reference, then the expected A/D conversion result is:

A/D counts = 32768 x Rthemistor/(Rthermisor + 46.4 kΩ)

If it is desired to linearize this result for the same temperature representation as the onboard temperature sensor:

Temperature °C = (Output_Code x 175.72/65536 – 46.85)

Then, the desired output code is:

Output_Code = 65536 x (Temperature + 46.85)/175.72

Using thermistor data sheet values of resistance versus temperature and choosing to linearize at the points (–15 °C, –5 °C, 5 °C, 15 °C, 25 °C, 35 °C, 45 °C, 55 °C, 65 °C, and 75 °C) results in the information in Table 7.

Table 7. Example Non-Linear Correction to Thermistor Voltage Measurements

Thermistor Resistance (from Data Sheet)	Vin/Vdd Assuming 24.3 kΩ Bias Resistors	A/D Codes	Desired (Temperature) Code	Slope
53650	0.524694377	17193	11879	–256
33892	0.410851961	13463	15608	–294
22021	0.31181943	10218	19338	–364
14674	0.231912002	7599	23067	–476
10000	0.170648464	5592	26797	–640
6948	0.125081011	4099	30527	–877
4917	0.091877347	3011	34256	–1210
3535	0.067804738	2222	37986	–1684
2586	0.050521627	1655	41715	–2346

The values highlighted in gray would be the table entries for the Si7013.

Entering the Table into Memory

The table is entered into memory addresses 0x82–0xB7, one byte at a time. For the above example, the values to be written are listed in Table 8:

Table 8. Example Non-Linear Thermistor Correction Entries into Si7013 Memory

Table Entry	Hex	Byte 1 Byte 2	Memory Location	Table Entry	Hex	Byte 1 Byte 2	Memory Location	Table Entry	Hex	Byte 1 Byte 2	Memory Location
17193	4329	43	82	11879	2E67	2E	94	–256	FF00	FF	A6
		29	83			67	95			00	A7
13463	3497	34	84	15608	3CF8	3C	96	–294	FEDA	FE	A8
		97	85			F8	97			DA	A9
10218	27EA	27	86	19338	4B8A	4B	98	–364	FE94	FE	AA
		EA	87			8A	99			94	AB
7599	1DAF	1D	88	23067	5A1B	5A	9A	–476	FE24	FE	AC
		AF	89			1B	9B			24	AD
5592	15D8	15	8A	26797	68AD	68	9C	–640	FD80	FD	AE
		D8	8B			AD	9D			80	AF
4099	1003	10	8C	30527	773F	77	9E	–877	FC93	FC	B0
		03	8D			3F	9F			93	B1
3011	0BC3	0B	8E	34256	85D0	85	A0	–1210	FB46	FB	B2
		C3	8F			D0	A1			46	B3
2222	08AE	08	90	37986	9462	94	A2	–1684	F96C	F9	B4
		AE	91			62	A3			6C	B5
1655	0677	06	92	41715	A2F3	A2	A4	–2346	F6D6	F6	B6
		77	93			F3	A5			D6	B7

The command code, 0xC5, is used for programming; so, for example, to program a Si7013 at slave address 0x40 with the values above starting with 0x4C to memory location 0x82, one would write:

<Start Condition> 0x40 W ACK 0xC5 ACK 0x82 ACK 0x2E ACK <Stop Condition>

……

<Start Condition> 0x40 W ACK 0xC5 ACK 0xB7 ACK 0xD6 ACK <Stop Condition>

After writing all values, the chip should be reset by a power cycle or I^2C reset command before attempting to use the correction mode of the voltage-sensing circuit.

It is not possible to change the values once written. However, to verify the values were written properly, use command 0x84. In the above example, to verify that 0x2E was written to location 0x82, use:

<Start Condition> 0x40 W ACK 0x84 ACK 0x82 ACK <Start Condition> 0x40R ACK 0x2E NACK <Stop Condition>

where 0x2E is the expected return value of the read transaction.

How to Choose Linearization Points

The table must be arranged in order of decreasing values for the input. The slope can be positive or negative, and it is assumed that only positive output values are desired.

Generally, the input/output pairs should be chosen around the area where greatest accuracy is desired. If the transfer function is highly nonlinear and the more closely spaced the points, the less error there will be from interpolation. However, if accuracy is desired over a wide range, the input/output pairs should be spaced evenly over the range of interest. The spreadsheet allows estimation of errors from the extrapolation process.

Other Register Settings

The voltage measurement configuration is determined by user register 2 of the Si7013. For thermistor measurement, it is assumed that the A/D input buffers will be used and that the A/D reference is VDD. The buffers are needed since the thermistor impedance is fairly large. VDD is used as a reference because the thermistor is biased relative to VDD. Thus, for a “hold master” measurement (SCL is held low during the measurement phase), Register 2 would be set to the following:

D7	D6	D5	D4	D3	D2	D1	D0
0	**0**	**1**	**0**	**0**	**1**	**1**	**0/1**
Not Used	Hold Master	Enable Linearization	7 msec Conversion Time	Not Used	Enable Buffer	VDD is Reference	Switch High or Low to Bias the Thermistor

Noise and AC Pick Up

The A/D of the Si7013 is a delta sigma type converter, and the input is not sampled. Thus, it is assumed that the input voltage is constant over the measurement period. Generally, some amount of analog filtering prior to the A/D input is desirable. In the standard application circuit, this is accomplished with 0.1 µF capacitors. These capacitors will form a filter at about 30 Hz, which is adequate for high-frequency noise pick up (e.g. am radio signals) but not for 60 Hz. If 60 Hz filtering is desired, these capacitors can be increased to >1 µF, or the result could be digitally filtered (average of several measurements). If the sampling can be synchronized to 120 Hz (use the faster conversion time for this), then an average of just two samples would reject 60 Hz.

In the standard biasing circuit, the bias can be turned off between measurements to save power (change bit zero of user register 2). If this is done, allow adequate settling time between enabling the bias and making the measurement (use approximately 100 msec for the 0.1 µF filter, which has a time constant of 30 msec).

APPENDIX E—THERMAL MODEL FOR A SENSOR ON A PADDLE

To illustrate some considerations for separating the sensor from the system, consider the following practical example of the sensor on a 3 cm x 3 cm PCB connected by a 1 cm wide piece of PCB material 3 cm long:

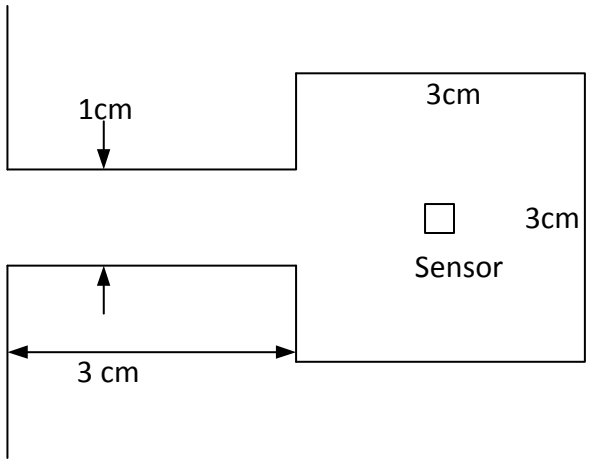

Figure 14. Sensor on a 3x3 cm PCB

Referring to the thermal model discussed in “3.2. Temperature and Humidity Sensor Placement” :

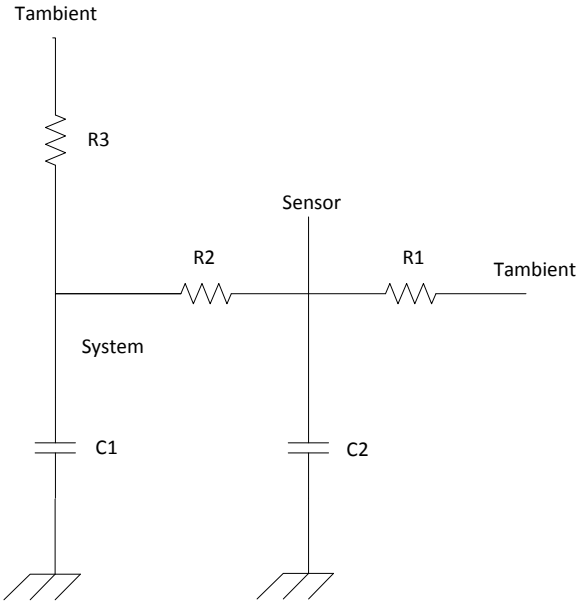

Figure 15. General Thermal Model for Sensor Placement

The thermal impedance to air for a standard FR4 PCB is about 1000 C/W per cm^2 of PCB area. With two sides exposed to the ambient a total of 18 cm^2 is connected to the ambient. This makes R1 55.5 C/W.

The mass of 9 cm^2 of PCB material is about 2.5 g (the specific gravity of FR4 is 1850 kg/m^3 and assuming 1.5 mm thickness) and the specific heat capacity of PCB material is 0.6 J/(g-C), so the heat capacity is 1.5 J/C.

The time constant R1 x C2 is 1.5 J/C x 55.5 C–second/J = 83 seconds.

This time constant is independent of the PCB area—more area means lower thermal impedance but higher thermal mass. To improve the time constant beyond this thinner PCB material would have to be used or there would need to be fins or airflow to reduce the thermal impedance.

Turning our attention to R2 the thermal conductivity of FR4 material in plane is around 1Watt/meter-C. So, for the example of the connection of the sensor area to the rest of the system by 1cm wide 3cm long 1.5mm thick FR4:

Conductance = thermal conductivity x area/length = 1 Watt/meter-°C x 10^{-2}m/cm x 1 x 0.15/3 = 0.05 x 10^{-2}W/°C

Or thermal impedance (1/conductance) is 2000 °C/W (this is R2). This is assuming minimal copper routing on the connector material.

With this design since R2 is 36 times R1, so the system heating will have a fairly minor effect. For example if the system heating is 10 °C the sensor temperature would only increase 0.3 °C.

If more thermal connection is tolerable the connector area could be made shorter or wider or the PCB area the sensor is connector to could be made smaller.

This example was intended to illustrate the thermal design considerations for good response to ambient conditions and insulation from the system. In some cases, it is not possible to place the sensor in sufficient thermal contact with the environment to shield it for the thermal mass and heat sources in the system. In this case, it is often possible to compensate for the system by placing an additional temperature sensor in the system. However, in all cases, the thermal contact of the sensor to the environment should be maximized, and the thermal contact of the sensor to the rest of the system should be minimized.

DOCUMENT CHANGE LIST

Revision 0.1 to Revision 1.0

- Updated storage, handling, and assembly instructions.
- Corrected Table 4, “Common Pressure Unit Conversions,” on page 31.

Revision 1.0 to Revision 1.1

- Multiple updates to include Si7013, Si7020, and Si7021 parts.

Revision 1.1 to Revision 1.2

- Added "4.2.Use of Conformal Coating and Under-Fill Materials" on page 11.
- Corrected simplified Magnus equation on page 27.

Revision 1.2 to Revision 1.3

- Added link to Si7013 Thermistor Correction Calculation Table on page 31.

Revision 1.3 to Revision 1.4

- Added sections 3.2.2 and 3.2.3.
- Updated section 3.3.
- Added Appendix E.

Revision 1.4 to Revision 1.5

- Revised to include Si7006, Si7007, Si7022, and Si7023.

Revision 1.5 to Revision 1.6

- Updated title to include temperature sensor.
- Updated to include Si7050, Si7053, Si7054, and Si7055.

Revision 1.6 to Revision 1.7

- Added Si7034.

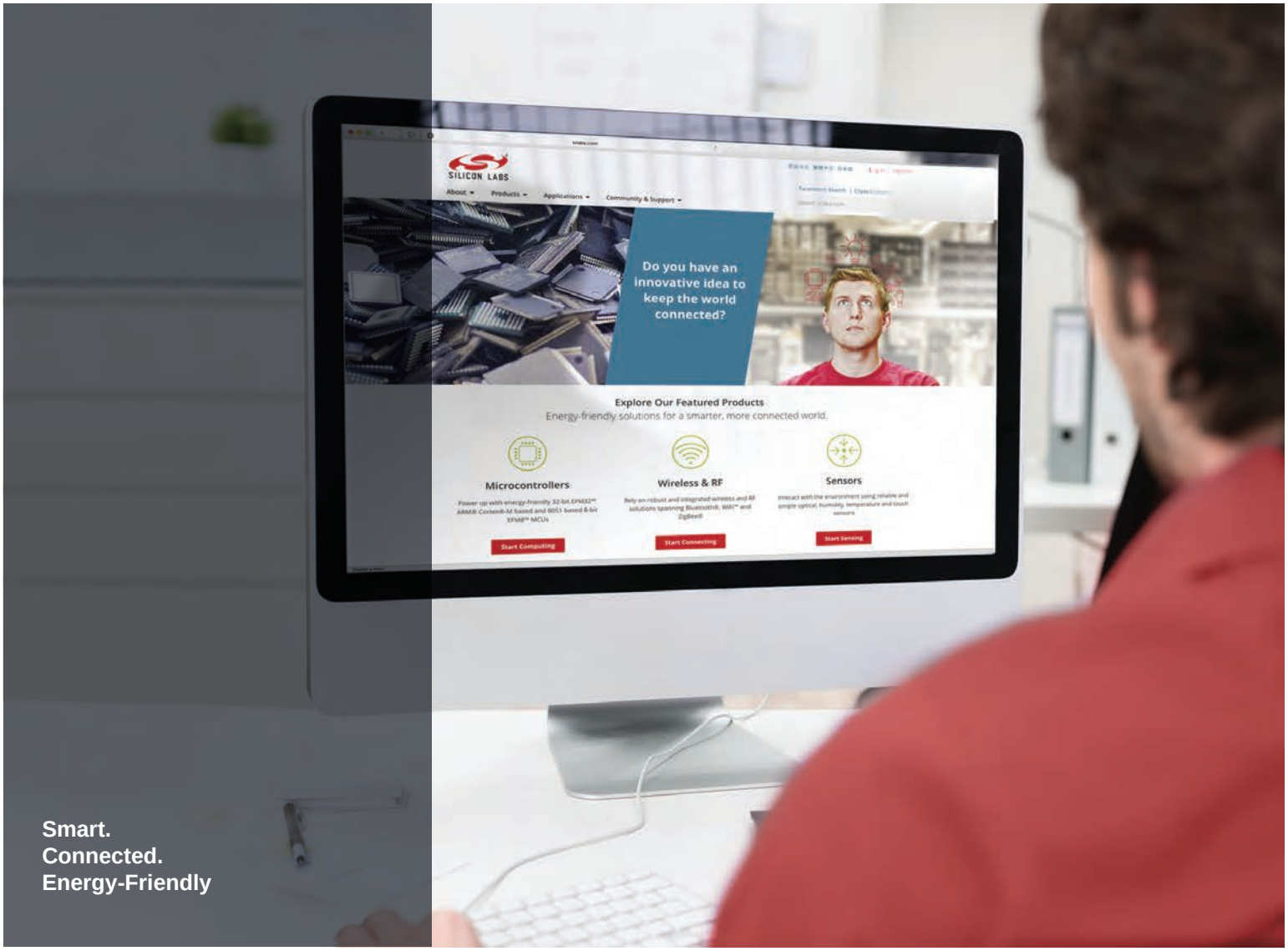

Products
www.silabs.com/products

Quality
www.silabs.com/quality

Support and Community
community.silabs.com

Disclaimer
Silicon Laboratories intends to provide customers with the latest, accurate, and in-depth documentation of all peripherals and modules available for system and software implementers using or intending to use the Silicon Laboratories products. Characterization data, available modules and peripherals, memory sizes and memory addresses refer to each specific device, and "Typical" parameters provided can and do vary in different applications. Application examples described herein are for illustrative purposes only. Silicon Laboratories reserves the right to make changes without further notice and limitation to product information, specifications, and descriptions herein, and does not give warranties as to the accuracy or completeness of the included information. Silicon Laboratories shall have no liability for the consequences of use of the information supplied herein. This document does not imply or express copyright licenses granted hereunder to design or fabricate any integrated circuits. The products must not be used within any Life Support System without the specific written consent of Silicon Laboratories. A "Life Support System" is any product or system intended to support or sustain life and/or health, which, if it fails, can be reasonably expected to result in significant personal injury or death. Silicon Laboratories products are generally not intended for military applications. Silicon Laboratories products shall under no circumstances be used in weapons of mass destruction including (but not limited to) nuclear, biological or chemical weapons, or missiles capable of delivering such weapons.

Trademark Information
Silicon Laboratories Inc., Silicon Laboratories, Silicon Labs, SiLabs and the Silicon Labs logo, CMEMS®, EFM, EFM32, EFR, Energy Micro, Energy Micro logo and combinations thereof, "the world's most energy friendly microcontrollers", Ember®, EZLink®, EZMac®, EZRadio®, EZRadioPRO®, DSPLL®, ISOmodem ®, Precision32®, ProSLIC®, SiPHY®, USBXpress® and others are trademarks or registered trademarks of Silicon Laboratories Inc. ARM, CORTEX, Cortex-M3 and THUMB are trademarks or registered trademarks of ARM Holdings. Keil is a registered trademark of ARM Limited. All other products or brand names mentioned herein are trademarks of their respective holders.

SILICON LABS

Silicon Laboratories Inc.
400 West Cesar Chavez
Austin, TX 78701
USA

http://www.silabs.com