AN5195K-C

Single chip IC for PAL/NTSC color TV (built-in I²C bus interface)

Unit: mm

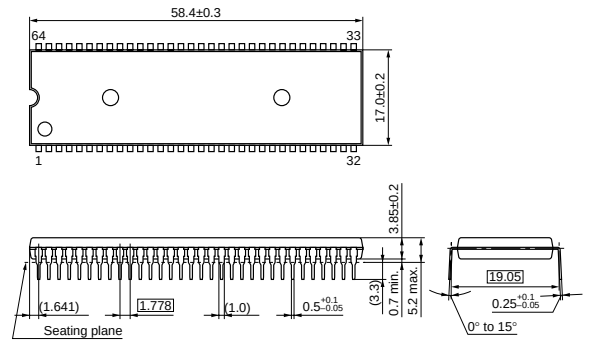

SDIP064-P-0750B

■ Overview

The AN5195K-C is an IC in which all of the PAL/NTSC system color television signal processing circuits are integrated on one chip. The rationalization of set production line can be realized by the incorporation of I²C bus interface.

■ Features

- Built-in video IF circuit, sound IF circuit, video signal processing circuit, color signal processing circuit, and sync. signal processing circuit
- Rationalization of set production line can be realized by the incorporation of I²C bus interface
- Can be applied to PAL/NTSC/AV-NTSC/M-NTSC system
- Package: 64-SDIP, supply voltage: 5 V, 9 V

■ Applications

- TV, TV-video combination

■ Block Diagram

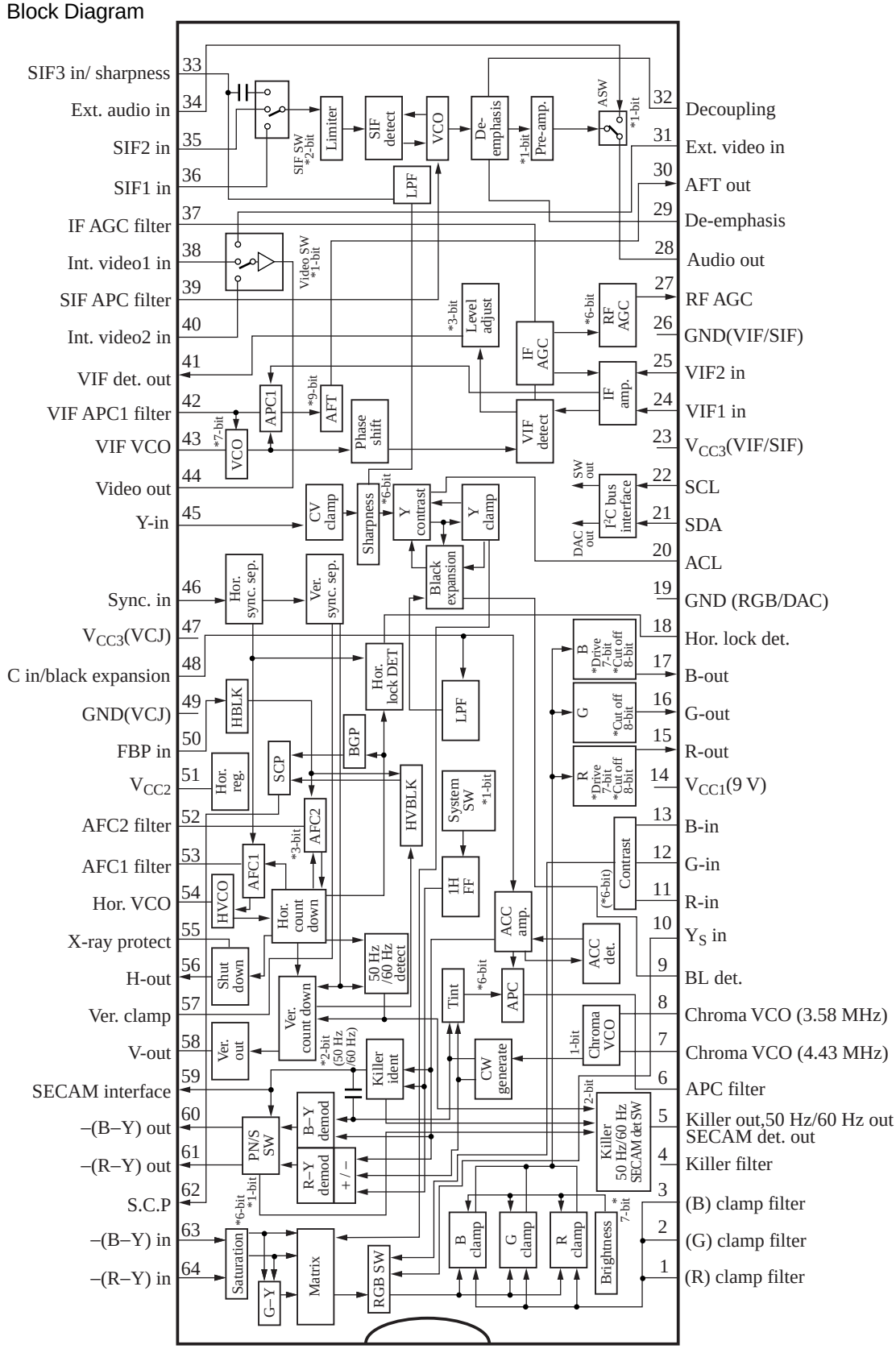

■ Pin Descriptions

Pin No.	Description	Pin No.	Description
1	(R) clamp	33	SIF3 input/ sharpness
2	(G) clamp	34	External audio input
3	(B) clamp	35	SIF2 input
4	Killer filter	36	SIF1 input
5	Killer out, 50 Hz/60 Hz out, SECAM det. out	37	IF AGC filter
6	Chroma APC filter	38	Internal video1 input
7	Chroma VCO (4.43 MHz)	39	SIF APC filter
8	Chroma VCO (3.58 MHz)	40	Internal video2 input
9	Black level det.	41	VIF detect output
10	Y_S input	42	VIF APC1 filter
11	External R input	43	VIF VCO ($f_P/2$)
12	External G input	44	Video output
13	External B input	45	Y input
14	V_{CC1}	46	HV sync. input
15	R output	47	V_{CC3-2} (chroma/jungle/DAC)
16	G output	48	Chroma input/black expansion start
17	B output	49	GND (video/chroma/jungle)
18	Hor. lock detect	50	FBP input
19	GND (RGB/I^2C/DAC)	51	V_{CC2} (hor. stability supply)
20	ACL	52	AFC2 filter
21	SDA	53	AFC1 filter
22	SCL	54	Hor. VCO (32 f_H)
23	V_{CC3-1} (VIF/SIF)	55	X-ray protection input
24	VIF1 input	56	Hor. pulse output
25	VIF2 input	57	Ver. sync. clamp
26	GND (VIF/SIF)	58	Ver. pulse output
27	RF AGC output	59	SECAM interface
28	Audio output	60	–(B–Y) output
29	De-emphasis	61	–(R–Y) output
30	AFT output	62	Sandcastle pulse output
31	External video input	63	–(B–Y) input
32	DC decoupling filter	64	–(R–Y) input

■ Absolute Maximum Ratings

Parameter	Symbol		Rating	Unit
Supply voltage	V_{CC}	V_{CC1}(14)	10.5	V
		V_{CC3}(23, 47)	6.0	
Supply current	I_{CC}	I_{14}	67	mA
		I_{23+47}	126	
		I_{51}	27	
Power dissipation*2	P_D		1,480	mW
Operating ambient temperature*1	T_{opr}		–20 to + 70	°C
Storage temperature *1	T_{stg}		–55 to + 150	°C

Note) *1 : Except fot the operating ambient temperature and storage temperature, all ratings are for T_a = 25°C.
*2 : The power dissipation shown is the value for T_a = 70°C.

■ Recommended Operating Range

Parameter	Symbol	Range	Unit
Supply voltage	V_{CC1}	8.1 to 9.9	V
	V_{CC3}	4.5 to 5.5	
Supply current	I_{51}	10 to 25	mA

■ Electrical Characteristics at T_a = 25°C

Parameter	Symbol	Conditions	Min	Typ	Max	Unit
Power supply						
Supply current 1	I_{14}	Current at V_{14} = 9 V	39	48	57	mA
Supply current 2	I_{23}	Current at V_{23} = 5 V	7	10	13	mA
Supply current 3	I_{47}	Current at V_{47} = 5 V	49	63	77	mA
Stabilized power supply voltage	V_{51}	Voltage at I_{51} = 15 mA	5.8	6.5	7.2	V
Stabilized power supply current	I_{51}	Current at V_{51} = 5 V	2	5	7	mA
Stabilized power supply input resistance	R_{51}	DC measurement, gradient at I_{51} = 10 mA and 25 mA	1	5	10	Ω
VIF circuit Typical input: f_P = 38.9 MHz, V_{IN} = 90 dBμ						
Video detection output (typ.)	V_{PO}	Modulation m = 87.5%, data 0B = 44	1.7	2.1	2.5	V[p-p]
Video detection output (max.)	V_{POmax}	0B = 74	1.9	2.6	3.3	V[p-p]
Video detection output (min.)	V_{POmin}	0B = 04	1.1	1.6	2.1	V[p-p]
Video detection output f characteristics	f_{PC}	Frequency to become –3 dB for 1 MHz	5.5	8	12	MHz
Sync. peak value voltage	V_{SP}	Sync. peak voltage at V[p-0] measurement	1.6	2.0	2.4	V
APC pull-in range (H)	f_{PPH}	High band side pull-in range (difference from f_P = 38.9 MHz)	1.0	2.0	—	MHz
APC pull-in range (L)	f_{PPL}	Low band side pull-in range (difference from f_P = 38.9 MHz)	—	–2.0	–1.0	MHz
RF AGC delay point adjusting range	ΔV_{RFDP}	Delay point (input to become V_{27} = approx. 6.5 V) at data 0A = 00 to 3F	75	—	95	dBμ

■ Electrical Characteristics at T_a = 25°C (continued)

Parameter	Symbol	Conditions	Min	Typ	Max	Unit
VIF circuit (continued) Typical input: f_P = 38.9 MHz, V_{IN} = 90 dBμ						
VCO free-running frequency	Δf_P	Dispersion without input V_{IN}, V_{37} (IF AGC) = 0 V(measurement of difference from 38.9 MHz)	–1.2	0	1.2	MHz
RF AGC maximum sink current	IRF_{max}	Maximum current IC can sink when pin 27 is low	1.5	3.0	—	mA
RF AGC minimum sink current	IRF_{min}	Leakage current of IC, when pin 27 is high	–50	0	50	μA
AFT discrimination sensitivity	μ_{AFT}	Δf = ±25 kHz	40	57	75	mV/kHz
AFT center voltage	V_{AFT}	V_{30} without input V_{IN}	4.0	4.5	5.0	V
AFT maximum output voltage	V_{AFTmax}	V_{30} at f = f_P –500 kHz	7.8	8.1	8.7	V
AFT minimum output voltage	V_{AFTmin}	V_{30} at f = f_P +500 kHz	0.3	0.8	1.0	V
Detection output resistance	R_{O41}	DC measurement I_O = – 0.4 mA to –1.0 mA	70	120	170	Ω
SIF circuit Typical input: f_S = 6.0 MHz, f_M = 400 Hz, V_{IN} = 90 dBμ						
Audio detection output (PAL, SIF1)	V_{SOP36}	Δf = ±50 kHz 0B–D3 = 0	0.90	1.15	1.40	V[rms]
Audio detection output (PAL, SIF2)	V_{SOP35}	Δf = ±50 kHz 0B–D3 = 0	0.90	1.15	1.40	V[rms]
Audio detection output (PAL,SIF3)	V_{SOP33}	Δf = ±50 kHz 0B–D3 = 0	0.90	1.15	1.40	V[rms]
Audio detection output NTSC/PAL	$R_{SN/P}$	Δf = ±25 kHz, 0B–D3 = 1, ratio to PAL (V_{SOP36})	–2.5	– 0.5	1.5	dB
Audio detection output linearity	ΔV_{SOP}	Ratio between f_S = 5.5 MHz and 6.0 MHz, and 6.5 MHz	–3	0	3	dB
SIF pull-in range NTSC (4.5 MHz)	f_{SNH} (4.5 MHz)	Pull-in range of high frequency side	4.8	5.0	—	MHz
SIF pull-in range NTSC (4.5 MHz)	f_{SNL} (4.5 MHz)	Pull-in range of low frequency side	—	4.0	4.2	MHz
SIF pull-in range PAL (5.5 MHz)	f_{SPH} (5.5 MHz)	Pull-in range of high frequency side	5.8	6.0	—	MHz
SIF pull-in range PAL (5.5 MHz)	f_{SPL} (5.5 MHz)	Pull-in range of low frequency side	—	5.0	5.2	MHz
SIF pull-in range PAL (6.0 MHz)	f_{SPH} (6.0 MHz)	Pull-in range of high frequency side	6.3	6.5	—	MHz
SIF pull-in range PAL (6.0 MHz)	f_{SPL} (6.0 MHz)	Pull-in range of low frequency side	—	5.5	5.7	MHz
SIF pull-in range PAL (6.5 MHz)	f_{SPH} (6.5 MHz)	Pull-in range of high frequency side	6.8	7.0	—	MHz
SIF pull-in range PAL (6.5 MHz)	f_{SPL} (6.5 MHz)	Pull-in range of low frequency side	—	6.0	6.2	MHz
De-emphasis pin output resistance (PAL)	R_{29P}	Impedance of pin 29 at PAL	32	40	48	kΩ
De-emphasis pin output resistance (NTSC)	R_{29N}	Impedance of pin 29 at NTSC	48	60	72	kΩ

■ Electrical Characteristics at T_a = 25°C (continued)

Parameter	Symbol	Conditions	Min	Typ	Max	Unit
AV SW circuit						
Video SW voltage gain	G_{VSW}	f = 1MHz, V_{IN} = V[p-p]	5.7	6.7	7.7	dB
Video SW f characteristics	f_{VSW}	Frequency to become –3 dB from f = 1 MHz, V_{IN} = 0.714 V[0-p]	8	10	—	MHz
Video SW external input pin voltage	V_{31}	DC measurement	1.7	2.0	2.3	V
Video SW external output DC voltage	V_{44E}	DC measurement, 03–D7 = 1, 0B–D7 = 1	4.2	4.8	5.4	V
Video SW external input resistance	R_{I31}	DC measurement	44	56	68	kΩ
Video SW output resistance	R_{O44}	DC measurement, I_O = – 0.6 mA to –1.0 mA	100	140	180	Ω
Video SW internal clamp pin voltage	$V_{38,40}$	DC measurement, I_{IN} = –1.0 mA	1.3	1.6	1.9	V
Video SW internal output DC voltage	V_{44I}	DC measurement	3.7	4.3	4.9	V
Audio SW voltage gain	G_{ASW}	Data 03–D7 = 1, 0B–D7 = 1 (external input) f = 400 Hz, V_{IN} = 1 V[p-p]	–1	0	1	dB
Audio SW input pin voltage	V_{34}	DC measurement	3.7	4.2	4.7	V
Audio SW output DC voltage	V_{28}	DC measurement	3.7	4.2	4.7	V
Audio SW input resistance	R_{I34}	DC measurement	55	65	75	kΩ
Audio SW output resistance	R_{O28}	DC measurement	200	400	600	Ω
Video signal processing circuit		Typical input: 0.6 V[p-p] (V_{WB} = 0.42 V[p-p] stair-step), at G-out				
Video output (typ.)	V_{YO}	Data 03 = 20 (typ.) (contrast)	1.9	2.4	2.9	V[0-p]
Video output (max.)	V_{YOmax}	Data 03 = 3F (max.)	4.1	5.0	5.9	V[0-p]
Video output (min.)	V_{YOmin}	Data 03 = 00 (min.)	0.15	0.50	1.00	V[0-p]
Contrast variable range	$Y_{Cmax/min}$	$\frac{03 = 3F}{03 = 00}$	15	20	25	dB
Video frequency characteristics	f_{YC}	Pin 33 = 5 V (sharpness), frequency to become –3 dB from f = 0.2 MHz	5.5	6.0	—	MHz
Picture quality variable range	$Y_{Smax/min}$	$\frac{V_{33} = 7\ V}{V_{33} = 5\ V}$, f = 3.8 MHz	9	13	17	dB
Pedestal level (typ.)	V_{PED}	Data 02 = 40 (typ.) (brightness)	2.0	2.5	3.0	V
Pedestal level variable width	ΔV_{PED}	Difference between data 02 = 00 and 7F	2.0	2.6	3.2	V
Brightness control sensitivity	ΔV_{BRT}	Average amount of change at data 02 = 30 and 50 per 1 step	14	20	26	mV/ Step
Video input clamp voltage	V_{YCLP}	Clamp voltage of pin 45	3.2	3.7	4.2	V
ACL sensitivity	ACL	Change of Y-out, when V_{20} = 3.0 V → 3.5 V	2.4	3.0	3.6	V/V
Blanking off threshold voltage	V_{YBL}	DC voltage of blanking pulse	—	1.0	1.5	V
Blanking level Service SW threshold voltage *1	V_{STH}	Stop voltage of vertical output, when lowering pin 20 (ACL) voltage	—	—	0.3	V
DC restoration ratio	T_{DC}	APL 10% to 90% $T_{DC} = \frac{\Delta AC - \Delta DC}{\Delta AC} \times 100$	90	100	110	%
Video input clamp current	I_{YCLP}	DC measurement: IC inside sink current	8	13	18	μA

Note) ∗1: Take great care for not to become V_{20} < 0.9 V at set design so that the pin 20 is combined use for service SW when it is used as the ACL.

■ Electrical Characteristics at T_a = 25°C (continued)

Parameter	Symbol	Conditions	Min	Typ	Max	Unit
Video signal processing circuit (continued)		Typical input: 0.6 V[p-p] (V_{WB} = 0.42 V[p-p] stair-step), at G-out				
Pedestal difference voltage	ΔV_{IPL}	Difference voltage of R,G,B-out pedestal	– 0.2	0	0.2	V
Brightness voltage tracking	ΔT_{BL}	R,G,B-out fluctuation level ratio of data 02 (brightness) = 20 to 60	0.9	1.0	1.1	Times
Video voltage gain relative ratio	ΔG_{YC}	Output ratio of R,B-out against G-out	0.8	1.0	1.2	Times
Video voltage gain tracking	ΔT_{CONT}	Gain ratio of R,G,B-out at data 03 (contrast) = 10 to 30	0.9	1.0	1.1	Times/ Times
Chroma signal processing circuit		Burst 150 mV[p-p] (PAL), reference is B-out				
Color-difference output (typ.)	V_{CO}	Input: Color bar data 00 = 20 (typ.), 03 = 20 (typ.)	2.9	3.7	4.5	V[p-p]
Color-difference output (max.)	V_{COmax}	Data 00 = 3F, amplitude of one side, 03 = 20	2.6	3.3	—	V[0-p]
Color-difference output (min.)	V_{COmin}	Data 00 = 00, 03 = 20	—	—	100	mV[p-p]
Contrast variable range	$C_{Cmax/min}$	$\frac{03 = 3F}{03 = 00}$, 00 = 20	15	20	25	dB
ACC characteristics 1	ACC1	Burst 150 mV[p-p] → 300 mV[p-p]	0.9	1.0	1.2	Times
ACC characteristics 2	ACC2	Burst 150 mV[p-p] → 30 mV[p-p]	0.8	1.0	1.2	Times
NTSC tint center	$\Delta\theta_C$	Difference from data 01 = 20 (tint), when adjusted at tint center	–7	0	7	Step
NTSC tint variable range 1	$\Delta\theta_1$	Input: Rainbow, data 01 = 3F	30	50	65	deg
NTSC tint variable range 2	$\Delta\theta_2$	Input: Rainbow, data 01 = 00	–65	–50	–30	deg
Color-difference output ratio (R)	R/B	Input: Rainbow for both PAL/NTSC	0.46	0.56	0.66	Times
Color-difference output ratio (G)	G/B	Input: Rainbow for both PAL/NTSC	0.28	0.34	0.40	Times
Color-difference output angle (R)	∠R	Input: Rainbow for both PAL/NTSC	78	90	102	deg
Color-difference output angle (G)	∠G	Input: Rainbow for both PAL/NTSC	224	236	248	deg
PAL color killer tolerance	V_{KILLP}	0 dB = 150 mV[p-p]	–57	–44	–34	dB
NTSC color killer tolerance	V_{KILLN}	0 dB = 150 mV[p-p]	–57	–44	–34	dB
APC pull-in range (H)	f_{CPH}	For both PAL/NTSC	450	700	—	Hz
APC pull-in range (L)	f_{CPL}	For both PAL/NTSC	—	–700	–450	Hz
Color killer detection output voltage (color)	V_{KC}	V_5, when chroma input Data 0A–D6 = 0, 0A–D7 = 1, killer out	4.5	5.0	—	V
Color killer detection output voltage (B&W)	V_{KBW}	V_5, when chroma input Data 0A–D6 = 0, 0A–D7 = 1, killer out	0	0.1	0.5	V
Demodulation output –(B–Y)	V_{DB}	Input: Measurement at pin 60 for both color bar PAL/NTSC	555	695	835	mV[p-p]
Demodulation output –(R–Y)	V_{DR}	Input: Measurement at pin 61 for both color bar PAL/NTSC	430	540	650	mV[p-p]
Demodulation output angle ∠(B–Y)	$\angle R_{DB}$	Phase shift of B–Y axis	–6	0	6	deg
Demodulation output angle ∠(R–Y)	$\angle R_{DR}$	Phase difference from B–Y axis	84	90	96	deg
CW output level (4.43 MHz)	V_{CWP}	AC component, when V_{CO} is set at 4.43 MHz	250	350	450	mV[p-p]

■ Electrical Characteristics at T_a = 25°C (continued)

Parameter	Symbol	Conditions	Min	Typ	Max	Unit
Chroma signal processing circuit (continued) Burst 150 mV[p-p] (PAL), reference is B-out						
CW output level (3.58 MHz)	V_{CWN}	AC component, when V_{CO} is set at 3.58 MHz	—	—	50	mV[p-p]
CW output level period (SECAM)	T_{CW}	CW output period at SECAM and PAL	1.31	1.41	1.51	ms
SECAM discrimination current	I_{SECAM}	Minimum value for taking out current from pin 59 and discriminating as SECAM	50	100	150	µA
SECAM discrimination output	V_{SE}	V_5 data, when SECAM signal inputted 0A–D6 = 1, 0A–D7 = 0, SECAM det. out	4.5	5.0	—	V
PAL/NTSC DC level	V_{59PN}	V_{59} DC level at PAL/NTSC	0.8	1.3	1.65	V
SECAM DC level	V_{59S}	V_{59} DC level at SECAM	4.1	4.6	5.1	V
RGB processing circuit DAC data are typical						
Drive adjustment range	G_{DV}	AC change amount of R, B-out, when drive adjustment max. and min.	5	6	7	dB
Cut-off adjustment range	V_{CUTOFF}	DC change amount of R,G,B-out, when cutoff adjustment max. and min.	2.1	2.4	2.7	V
Y_S threshold voltage	V_{YSON}	Minimum DC voltage, when Y_S turns on	1.0	—	—	V
Y_S threshold voltage	V_{YSOFF}	Maximum DC voltage, when Y_S turns off	—	—	0.4	V
External RGB pedestal difference voltage	ΔV_{EPL}	Y_S = 5 V	–200	0	200	mV
Internal and external pedestal difference voltage	$\Delta V_{PL/IE}$	Internal-external	200	0	200	mV
External RGB output voltage	V_{ERGB}	Input 0.7 V[p-p], contrast 03 = 20 (typ.)	1.8	2.2	2.7	V[p-p]
External RGB output difference voltage	ΔV_{ERGB}	Output ratio of external R,G,B-out	0.8	1.0	1.2	Times
External RGB contrast variable range	$E_{Cmax/min}$	$\frac{03 = 3F}{03 = 00}$	12	17	22	dB
External RGB frequency characteristics	f_{RGBC}	Input 0.2 V[p-p]	8	10	—	MHz
Internal and external RGB output voltage ratio	$V_{E/I}$	External 0.7 V[p-p]/internal 0.6 V[p-p] input, contrast 03 = 20 (typ.)	0.78	0.92	1.06	Times
Synchronizing signal processing circuit						
Horizontal free-running oscillation frequency	f_{HO}	Without sync. signal input	15.33	15.63	15.93	kHz
Horizontal output pulse duty cycle	τ_{HO}	Upward going pulse duty cycle	31	37	43	%
Horizontal pull-in range	f_{HP}	Difference from f_H = 15.625 kHz	±500	±650	—	Hz
PAL vertical free-running oscillation frequency	f_{VO-P}	Data 01–D7 = 1, 02–D7 = 0 Forced 50 Hz mode, no sync. signal input	48	50	52	Hz
NTSC vertical free-running oscillation frequency	f_{VO-N}	Data 01–D7 = 1, 02–D7 = 1 Forced 60 Hz mode, no sync. signal input	58	60	62	Hz
Vertical output pulse width	τ_{VO}	For both PAL/NTSC	9	10	11	1/fH
PAL vertical pull-in range	f_{VP-P}	f_H = 15.625 kHz, forced 50 Hz mode	46	—	54	Hz
NTSC vertical pull-in range	f_{VP-N}	f_H = 15.75 kHz, forced 60 Hz mode	56	—	64	Hz
Horizontal output voltage (H)	V_{56H}	High-level DC voltage	2.9	3.2	3.5	V
Horizontal output voltage (L)	V_{56L}	Low-level DC voltage	—	—	0.3	V

■ Electrical Characteristics at T_a = 25°C (continued)

Parameter	Symbol	Conditions	Min	Typ	Max	Unit
Synchronizing signal processing circuit (continued)						
Vertical output voltage (H)	V_{58H}	High-level DC voltage	3.9	4.2	4.5	V
Vertical output voltage (L)	V_{58L}	Low-level DC voltage	—	—	0.3	V
Picture center variable range	ΔT_{HC}	Change amount of phase difference of H sync. and H-out of data 0B = 40 to 47	2.6	3.2	4.4	µs
Overvoltage protective operation voltage	V_{XRAY}	Minimum voltage of pin 55 at which H-out stops to appear	0.60	0.68	0.76	V
Vertical frequency discrimination 50	f_{50}	Vertical frequency to become V_5 = low (< 0.5 V)	47	—	55	Hz
Vertical frequency discrimination 60	f_{60}	Vertical frequency to become V_5 = high (> 4.5 V)	57	—	63	Hz
Sync. signal clamp voltage	V_{46}	V_{46} clamp voltage	1.0	1.3	1.6	V
Horizontal output start voltage	V_{fHS}	Minimum V_{50} to become f_0 >10 kHz, when horizontal oscillation output is more than 1 V[p-p]	3.4	4.2	5.0	V
I²C interface						
Sink current at ACK	I_{ACK}	Maximum value of pin 21 sink current when ACK	1.8	2.5	5.0	mA
SCL, SDA signal input high-level	V_{IHI}		3.1	—	—	V
SCL, SDA signal input low-level	V_{ILO}		—	—	0.9	V
Maximum frequency allowable to input	f_{Imax}		—	—	100	kbit/s

• Design reference data

Note) The characteristics listed below are theoretical values based on the IC design and are not guaranteed.

Parameter	Symbol	Conditions	Min	Typ	Max	Unit
VIF circuit Typical input: f_P = 38.9 MHz, V_{IN} = 90 dBµ						
Input sensitivity	V_{PS}	Input level to become V_{PO1} = −3 dB	—	45	—	dBµ
Maximum allowable input	V_{Pmax}	Input level to become V_{PO1} = +1 dB	—	110	—	dBµ
SN ratio	SN_P		50	—	—	dB
Differential gain	DG_P		—	—	5	%
Differential phase	DP_P		—	—	5	deg
Black noise detection level	ΔV_{BN}	Deference from sync. peak value	—	–45	—	IRE
Black noise clamp level	ΔV_{BNC}	Deference from sync. peak value	—	45	—	IRE
RF AGC operation sensitivity	G_{RF}	Input level difference to become V_{27} = 1 V → 7 V	0.5	—	3.0	dB
VCO switch on drift	Δf_{PD}	Frequency drift from 5 seconds to 5 mins. after SW on	—	—	200	kHz
Intermodulation	IM	$V_{fC} - V_{fP}$ = −2 dB, $V_{fC} - V_{fP}$ = −12 dB	46	—	—	dB
RF AGC adjustment sensitivity	S_{RF}	Average amount of change of output voltage V_{27} at data 1 step	2	—	5	V/ Step

■ Electrical Characteristics at T_a = 25°C (continued)

• Design reference data (continued)

Note) The characteristics listed below are theoretical values based on the IC design and are not guaranteed.

Parameter	Symbol	Conditions	Min	Typ	Max	Unit
VIF circuit (continued) Typical input: f_P = 38.9 MHz, V_{IN} = 90 dBμ						
AFT offset adjustment sensitivity	S_{AFT}	Average amount of change of output voltage V_{30} at data 1 step	0.1	—	0.3	V/ Step
Video detection output fluctuation with V_{CC}	$\Delta V_{P/V}$	V_{CC} = ±10%	—	—	±15	%
Video detection output-temperature characteristics	$\Delta V_{P/T}$	T_a = –20°C to +70°C	—	—	±10	%
Input resistance (pin 24, pin 25)	$R_{I24,25}$	f = 38.9 MHz	—	1.2	—	kΩ
Input capacitance (pin24, pin 25)	$C_{I24,25}$	f = 38.9 MHz	—	4.0	—	pF
Sound IF output level	V_{SIF}	f_S = 38.9 MHz–6.0 MHz, P/S = 20 dB	90	—	110	dBμ
VCO control sensitivity	β_P	ΔV_{42} = ± 0.1 V	2.0	—	3.5	kHz/mV
VCO control range	f_{VCO}	Free-running frequency change width at data 0C = 00 to 7F	3	—	5	MHz
RF AGC delay-point temperature characteristics	$\Delta V_{DP/T}$	T_a = –20°C to +70°C	—	—	5	dB
VCO free-running frequency temperature characteristics	$\Delta f_{P/T}$	T_a = –20°C to +70°C	—	300	—	kHz
AFT center frequency temperature characteristics	$\Delta f_{AFT/T}$	T_a = –20°C to +70°C, input frequency at which AFT output voltage becomes 4.5 V	—	300	—	kHz
External mode output DC voltage	V_{41EXT}	Output DC voltage at AV SW external mode	0.5	1.0	1.8	V
SIF circuit Typical input: f_S = 6.0 MHz, f_M = 400 Hz, V_{IN} = 90 dBμ						
Input limiting level	V_{LIM}	Input level to become V_{SOP} = –3 dB	—	—	50	dBμ
AM rejection ratio	AMR	AM = 30%	55	—	—	dB
Total harmonic distortion	THD	Δf = ±50 kHz	—	—	1.0	%
SN ratio	SN_A	Δf = ±50 kHz, f_M = 400 Hz, on/off	55	—	—	dB
Audio output with V_{CC} fluctuation	$\Delta V_{S/V}$	V_{CC} = ±10%	—	—	±10	%
Audio output temperature characteristics	$\Delta V_{S/T}$	T_a = –20°C to +70°C	—	—	±10	%
SIF input resistance	R_{I35}	DC measurement	—	30	—	kΩ
SIF input resistance	R_{I36}	DC measurement	—	30	—	kΩ
AV SW circuit						
Video SW cross-talk (Internal → Internal)	CT_{VII}	f = 1 MHz, V_{IN} = 1 V[p-p] Internal → Internal	—	—	–55	dB
Video SW cross-talk (External → Internal)	CT_{VEI}	f = 1 MHz, V_{IN} = 1 V[p-p] Internal → External, External → Internal	—	—	–55	dB
Audio SW cross-talk (Internal → Internal)	CT_{AII}	f_S = 6.5 MHz, f_M = 400 Hz, V_{IN} = 1 V[p-p] f_S = 6.5 MHz, f_M = 1.0 kHz, V_{IN} = 1 V[p-p]	—	—	–60	dB

■ Electrical Characteristics at T_a = 25°C (continued)

• Design reference data (continued)

Note) The characteristics listed below are theoretical values based on the IC design and are not guaranteed.

Parameter	Symbol	Conditions	Min	Typ	Max	Unit
AV SW circuit (continued)						
SIF SW cross-talk (External → Internal)	CT_{AEI}	f_S = 6.5 MHz, f_M = 400 Hz, V_{IN} = 1 V[p-p] Inside f = 400 Hz, V_{IN} = 1 V[p-p]	—	—	−60	dB
Video signal processing circuit	Typical input: 0.6 V[p-p] (V_{BW} = 0.42 V[0-p] stair-step) at G-out					
Black level extension 1	V_{BL1}	Input: Total black, difference between the voltage at pin 9 = 9 V and open (with RC filter)	−100	0	100	mV
Black level extension 2	V_{BL2}	Input: Total black, difference between the voltage at pin 9 = 3 V and 9 V	400	700	1 000	mV
Black level extension 3	V_{BL3}	Input: approx. 20IRE, difference between the voltage at pin 9 = open and 9 V, 03 (contrast) = 3F (max.)	100	300	500	mV
Contrast variation with sharpness	ΔV_{CS}	Y-out output level difference, when sharpness max. and min.	−300	0	300	mV
Brightness variation with sharpness	ΔV_{BS}	Pedestal level DC difference, when sharpness max. and min.	−250	0	250	mV
Input dynamic range	V_{Imax}	03 (contrast) = 20 (typ.)	—	—	1.6	V[p-p]
Y signal SN ratio	SN_Y	03 (contrast) = 3F (max.)	53	—	—	dB
Black level extension start point	V_{BLS}	Start point at V_{48} = 4.5 V	37	42	47	IRE
Video output with V_{CC} fluctuation	$\Delta V_{Y/V}$	V_{CC1}= 9 V (allowance: ±10%)	—	—	±15	%
Video output-temperature characteristics	$\Delta V_{Y/T}$	T_a = −20°C to +70°C	—	—	±10	%
ACL start point	V_{ACL}	V_{20} at which output amplitude becomes 90% when ACL pin (V_{20}) is dereased from 5 V	3.4	3.7	4.0	V
Color signal processing circuit	Burst 150 mV[p-p] (PAL), reference is B-out					
Demodulation output residual carrier	V_{CAR1}	2 f_{SC} level of pin 60 and pin 61	—	—	30	mV
Color difference output residual carrier	V_{CAR2}	2 f_{SC} level of pin 15, pin 16, and pin 17	—	—	50	mV
VCO free-running frequency (PAL)	f_{CP}	Difference from f = 4.433619 MHz	−300	—	300	Hz
VCO free-running frequency (NTSC)	f_{CN}	Difference from f = 3.579545 MHz	−300	—	300	Hz
f_{CO} fluctuation with V_{CC}	$\Delta f_C/V_{CC}$	V_{CC1} = 9 V (allowance: ±10%), V_{CC3} = 5 V (allowance: ±10%)	−300	—	300	Hz
Static phase error (PAL)	$\Delta\theta_P$	Tint shift, when Δf_C = −300 Hz to +300 Hz change	—	—	5	deg/ 100 Hz
Static phase error (NTSC)	$\Delta\theta_N$	Tint shift, when Δf_C = −300 Hz to +300 Hz change	—	—	5	deg/ 100 Hz
PAL/NTSC	$R_{P/N}$	Output amplitude ratio between PAL and NTSC	0.7	1.0	1.3	Times
Line crawling	ΔV_{PAL}	Pin 61: Output amplitude difference per 1H for – (R–Y) pin	—	—	50	mV
Color difference output bandwidth	f_{CC}	Band to become −3 dB	1.0	—	—	MHz

■ Electrical Characteristics at T_a = 25°C (continued)

• Design reference data (continued)

Note) The characteristics listed below are theoretical values based on the IC design and are not guaranteed.

Parameter	Symbol	Conditions	Min	Typ	Max	Unit
Color signal processing circuit (continued)		Burst 150 mV[p-p] (PAL), reference is B-out				
Color-difference output fluctuation with V_{CC}	$\Delta V_{C/V}$	V_{CC1} = 9 V (allowance: ±10%), V_{CC3} = 5 V (allowance: ±10%)	—	—	±15	%
Color-difference output temperature characteristics	$\Delta V_{C/T}$	T_a= –20°C to +70°C	—	—	±15	%
PAL/NTSC output impedance	$R_{O60,61PN}$	DC measurement	390	480	570	Ω
SECAM output impedance	$R_{O60,61S}$	DC measurement	100	—	—	kΩ
Color/B&W DC difference voltage	ΔV_{CBW}	Pedestal level DC difference, when burst signal with or without	–60	0	60	mV
(C–Y)/Y	$R_{C/Y}$	Color bar input, B-out Contrast typ., color data 00 = 30	0.9	1.2	1.5	V[0-p]/ V[0-p]
RGB processing circuit						
Y_S changeover speed	f_{YS}	f_{YS}, when Y_S input is 3 V[0-p], output level –3 dB	7	—	—	MHz
External RGB input dynamic range	V_{DEXT}	Contrast max., data 03 = 3F	1.0	—	—	V[p-p]
Internal/external crosstalk	CT_{RGB}	Leakage, when f = 1 MHz, 1 V[p-p], Y_S = 5 V	—	—	–50	dB
Synchronizing signal processing circuit						
Lock detection output voltage	V_{LD}	V_{18}, when horizontal AFC lock	5.7	6.3	6.9	V
Lock detection charge and discharge current	I_{LD}	DC measurement	±0.6	±0.8	±1.1	mA
EBP (RGB) slice level	V_{FBP}	Minimum voltage of pin 50, when blanking is applied to RGB output	0.4	0.75	1.1	V
EBP (AFC2) slice level	V_{FBPH}	Minimum voltage of pin 50 at which AFC2 operates	1.5	1.9	2.3	V
Horizontal AFC μ	μ_H	DC measurement	30	37	44	μA/μs
Horizontal VCO β	β_H	β curve gradient near f = 15.75 kHz	1.4	1.9	2.4	Hz/mV
Burst gate pulse position	P_{BGP}	For both PAL/NTSC, delay from H. sync. rise	0.2	0.4	0.6	μs
PAL burst gate pulse width	W_{BGPP}		3.4	4.0	4.6	μs
NTSC burst gate pulse width	W_{BGPN}		2.5	3.0	3.5	μs
Burst gate pulse output voltage	V_{BGP}	DC voltage of pin 62 in BGP period	4.5	4.7	4.9	V
H blanking pulse output voltage	V_{HBLK}	DC voltage in H-blanking pulse period of pin 62	2.1	2.4	2.7	V
V blanking pulse output voltage	V_{VBLK}	DC voltage in V-blanking pulse period of pin 62	2.1	2.4	2.7	V
PAL V blanking pulse width	W_{VP}	Pulse width at f = 15.625 kHz	1.31	1.41	1.51	ms
NTSC blanking pulse width	W_{VN}	Pulse width at f = 15.75 kHz	1.01	1.11	1.21	ms
FBP allowable range	T_{FBP}	Time from H-out rise to FBP center	12	—	19	μs

■ Electrical Characteristics at T_a = 25°C (continued)

• Design reference data (continued)

Note) The characteristics listed below are theoretical values based on the IC design and are not guaranteed.

Parameter	Symbol	Conditions	Min	Typ	Max	Unit
Synchronizing signal processing circuit (continued)						
FBP max. allowable input voltage	V_{AFBP}		2.5	—	5.0	V
I²C Interface						
Bus free before start	t_{BUF}		4.0	—	—	µs
Start condition set-up time	$t_{SU,STA}$		4.0	—	—	µs
Start condition hold time	$t_{HD,STA}$		4.0	—	—	µs
Low period SCL, SDA	t_{LOW}		4.0	—	—	µs
High period SCL	t_{HIGH}		4.0	—	—	µs
Rise time SCL, SDA	t_r		—	—	1.0	µs
Fall time SCL, SDA	t_f		—	—	0.35	µs
Data set-up time (write)	$t_{SU, DAT}$		0.25	—	—	µs
Data hold time (write)	$t_{HD, DAT}$		0	—	—	µs
Acknowledge set-up time	$t_{SU, ACK}$		—	—	3.5	µs
Acknowledge hold time	$t_{HD, ACK}$		0	—	—	µs
Stop condition set-up time	$t_{SU,STO}$		4.0	—	—	µs
DAC						
3, 6, 7-bit DAC DNLE	$L_{3,6,7}$	1LSB = {data (max.) − data (00)}/ 7, 63, 127	0.1	1.0	1.9	$\frac{LSB}{Step}$
8-bit DAC DNLE	L_8	1LSB = {data (FF) − data (00)}/255 (except 7F → 80)	0.1	1.0	1.9	$\frac{LSB}{Step}$
8-bit DAC DNLE 80	$L_{8\text{-}80}$	LSB = {data (FF) − data (00)}/255 (7F → 80)	0.1	1.0	2.9	$\frac{LSB}{Step}$
AFT DAC overlap	ΔStep	Overlap of AFT 8-bit 2-stage changeover	27	32	37	Step

• Typical conditions when testing

1. Input signal
   1) VIF: f_P = 38.9 MHz, V_{IN} = 90 dBµ
      Video modulation : modulated signal is 10-staircase. Modulation m = 87.5%
      V_{IN} = 90 dBµ, pin 25 input level approx. 84 dBµ
   2) SIF: f_S = 6.0 MHz, V_{IN} = 90 dBµ, modulated signal f_M = 400 MHz, deviation: PAL±50 kHz, NTSC±25 kHz
   3) Video: 10-stair-step 0.6 V[p-p] (V_{BW} = 0.42 V[0-p])
   4) Chroma: Color bar signal: Burst level 150 mV[p-p]
      Rainbow signal: Burst level 150 mV[p-p]
   5) Sync. signal: 0.6 V[p-p]

■ Electrical Characteristics (continued)

• Typical conditions when testing (continued)

2. I^2C bus conditions: (PAL)

Sub Address	Data (H)
00	20
01	20
02	40
03	20
04	00
05	00
06	00
07	40
08	40
09	01
0A	20
0B	44
0C	C0

DAC typical condition

Color	Center
Tint	Center
Brightness	Center
Contrast	Center
Cut-off R	Minimum
Cut-off G	Minimum
Cut-off B	Minimum
Drive R, B	Center
Video output	Center
Picture center position	Center
AFT	Center
RF AGC	Center
VIF VCO	Center

SW typical condition

PAL mode

RF being inputted state (Video1 in, SIF1 in)

■ Terminal Equivalent Circuits

Pin No.	Equivalent circuit	Description	DC (V)
1 2 3	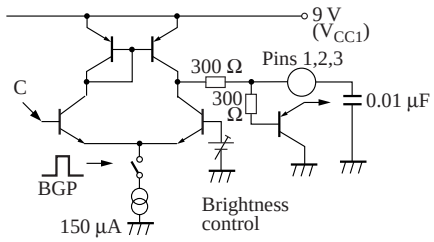	Pin 1: Primary color signal clamp pin (R): Pin 2: Primary color signal clamp pin (G): Pin 3: Primary color signal clamp pin (B): • Clamp pulse uses internal clamp pulse (BGP)	DC approx. 7 V
4	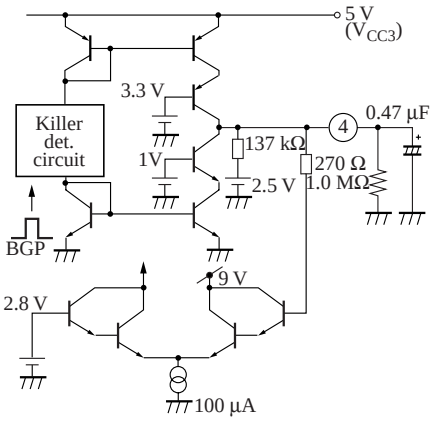	Killer filter pin: • Filter pin for killer detection circuit (operates for BGP period) • Killer turns on (without color output) at 2.8 V or less	DC approx. 3.3 V

■ Terminal Equivalent Circuits (continued)

Pin No.	Equivalent circuit	Description	DC (V)
5	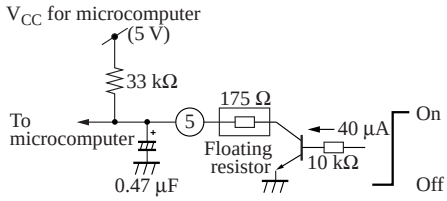	Killer, 50 Hz/60 Hz and SECAM det. output pin: • Output selecting by SW (I^2C bus) • Connect 33 kΩ load resistor of pin 5 to microcomputer V_{CC}	DC low-level 0.2 V high-level 5 V
6	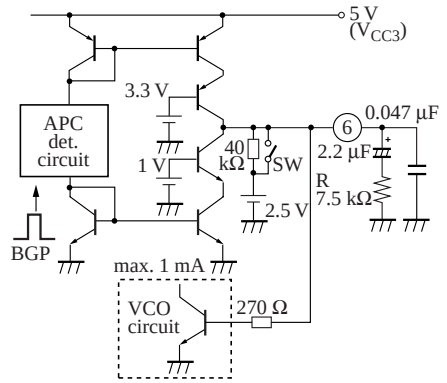	Pin for APC filter: • Filter pin for APC detection circuit (operates for BGP period) • Detection sensitivity becomes large when external R → large (Tends to pull-in easily. Tends to be affected by noise) 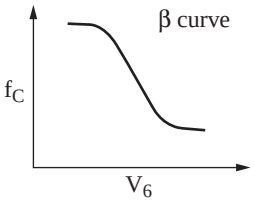 • At SECAM, APC circuit is stopped by short circuiting 40 kΩ resistor	DC approx. 2.5 V
7 8	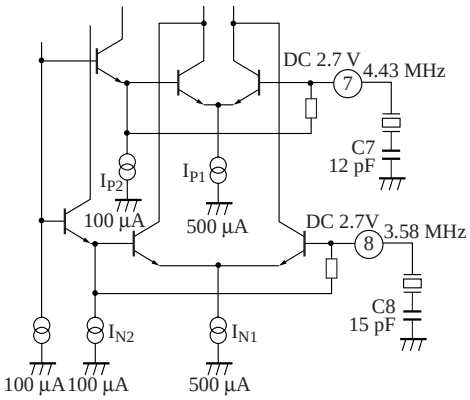	Pin 7: Chroma oscillation pin (4.43 MHz): Pin 8: Chroma oscillation pin (3.58 MHz): • Oscillation pin for chroma. Either one of 4.43 MHz or 3.58 MHz is oscillated • Oscillation frequency changeover is performed by 08–D7 bit of I^2C bus • At 08–D7= 0 I_{P1} and I_{P2} turn-on and at 4.43 MHz, oscillation starts At 08–D7=1 I_{N1} and I_{N2} turn-on and at 3.58 MHz, oscillation starts • Pattern design of pin and oscillator element should be as short as possible.	AC $f = f_C$ approx. 0.7 V[p-p]

■ Terminal Equivalent Circuits (continued)

Pin No.	Equivalent circuit	Description	DC (V)
9	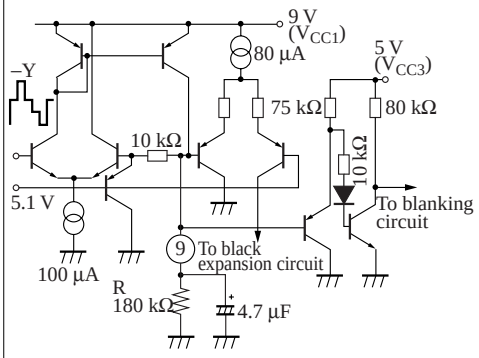	Black level detection pin: Blanking off SW pin • Black level detection filter pin for black extension circuit • Holds the most black Y level except blanking period • Changes operating sensitivity (area judged as black) of black extension by external R Responds with small area when R goes large. • To stop the black extension, set pin 9 to V_{CC} (9 V). • Connected to GND, blanking comes off. (also the black extension is off)	DC approx. 5.1 V
10	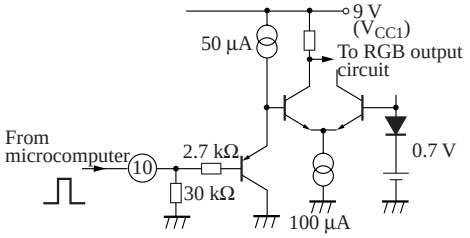	Y_S input pin: • Fast blanking pulse input pin for external analog RGB • Turns on at a voltage of 1 V[0-p] or more and off at 0.4 V[0-p] or less.	AC (Pulse) 
11 12 13	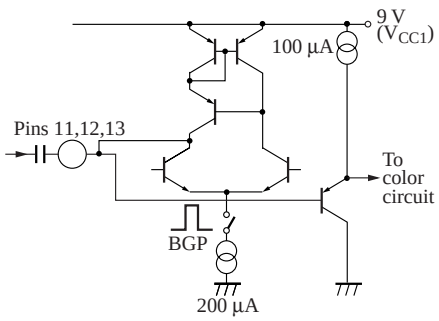	Pin 11: External R input pin: Pin 12: External G input pin: Pin 13: External B input pin: • Output changes linearly according to input level.	AC
14	—	V_{CC1} (typ. 9 V): • Output part of VIF and SIF circuit • AV SW circuit • Video circuit • RGB circuit	DC 9 V
15 16 17	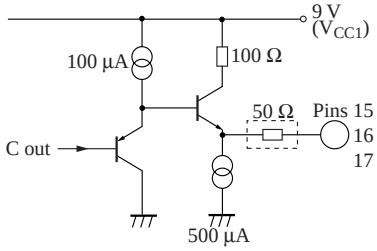	Pin 15: R-out pin: Pin 16: G-out pin: Pin 17: B-out pin: • BLK level: Approx. 0.9 V • Black (pedestal) level: Approx. 2.2 V • Blanking can be released when pin 9 (black level detection pin) is set at 0 V.	AC 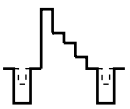

■ Terminal Equivalent Circuits (continued)

Pin No.	Equivalent circuit	Description	DC (V)
18	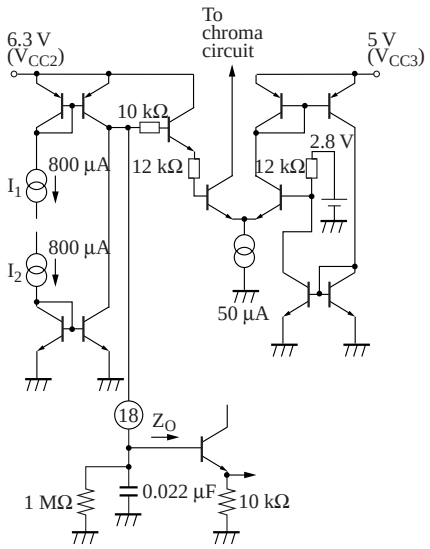	Horizontal sync. detection pin: • Phase of horizontal synchronizing signal and horizontal output pulse is detected and outputted. • Pin 18 is low at out of phase. • In asynchronous state, color control becomes min. and chroma output disappears. • Pay attention to impedance when voltage of pin18 is used by micro-computer ($Z_O \geq 500$ kΩ is required) 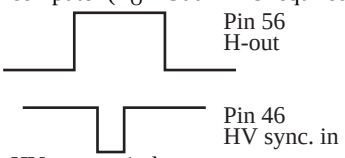 • HV_{SYNC} period When pin 56 is high: I_1 on When pin 56 is low: I_2 on	DC at synchronous approx. 6 V at asynchronous approx. 0.3 V
19	—	GND: • RGB circuit • DAC I^2C circuit	—
20	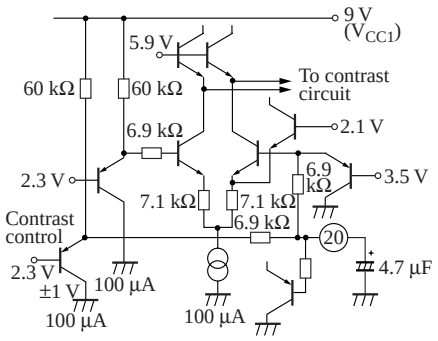	ACL pin: • Contrast can be reduced when DC voltage of pin 20 is decreased from the outside. • Service SW Note) When pin 20 is used as ACL, set design must be done not to become $V_{20} < 0.9$ V so that pin 20 operates also as the service SW.	DC approx. 3 V
21	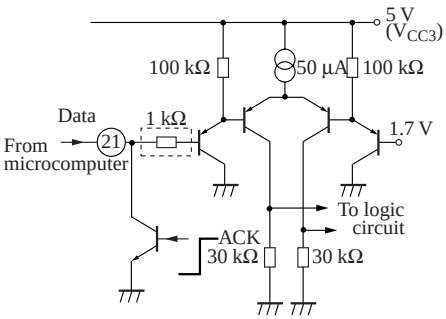	I^2C bus data input pin:	AC (pulse)

■ Terminal Equivalent Circuits (continued)

Pin No.	Equivalent circuit	Description	DC (V)
22	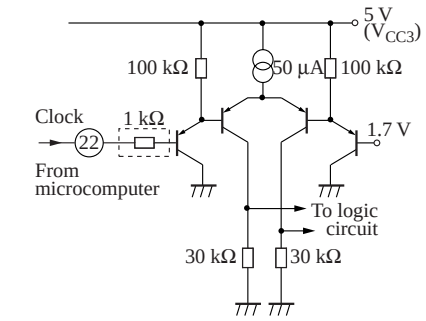	I^2C clock input pin:	AC (Pulse)
23	—	V_{CC3-1} (typ. 5 V): • For VIF and SIF circuit	DC 5 V
24 25	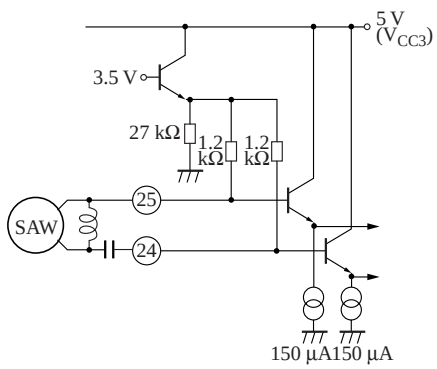	Pin 24: VIF input pin-1: Pin 25: VIF input pin-2: • Input for VIF amp. and balanced input	AC $f = f_P$ DC level approx. 2.7 V
26	—	GND: • For VIF and SIF circuit	DC
27	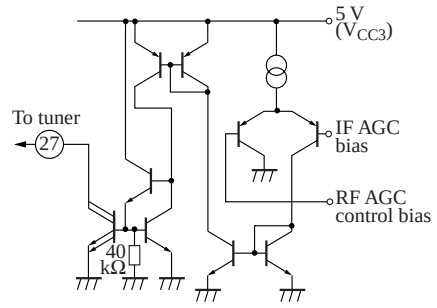	RF AGC output pin: • Open collector output. Can be used at given bias (max. 12 V)	DC
28	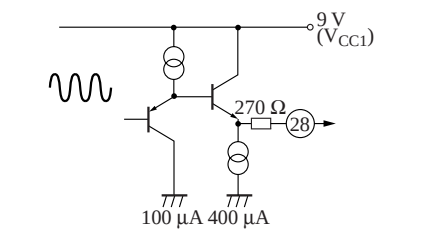	Audio output pin:	AC 0 kHz to 20 kHz

■ Terminal Equivalent Circuits (continued)

Pin No.	Equivalent circuit	Description	DC (V)
29	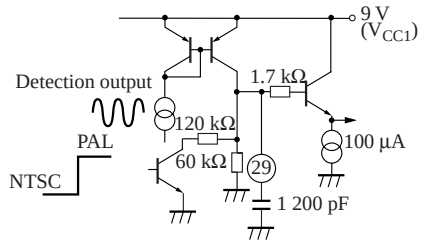	De-empahsis pin • De-empahsis filter pin for sound detection signal. • External C is the same for PAL and NTSC (internal impedance changes) • PAL: 120 kΩ//60 kΩ × 1 200 pF = 48 µs • NTSC: 60 kΩ × 1 200 pF = 72 µs	AC 0 kHz to 20 kHz
30	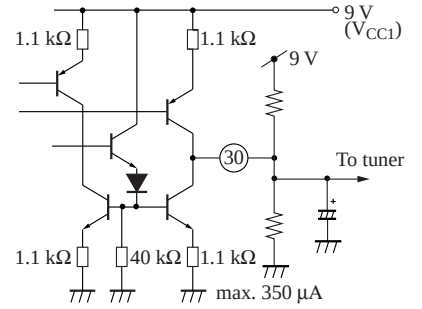	AFT output pin • Center voltage offset should be adjusted by using bus. • If AFT defeat SW is turned on (09 = 00), V_{30} comes to a value determined by the value of externally attached resistor dividing. • AFT µ is variable by impedance of externally attached resistor.	DC
31	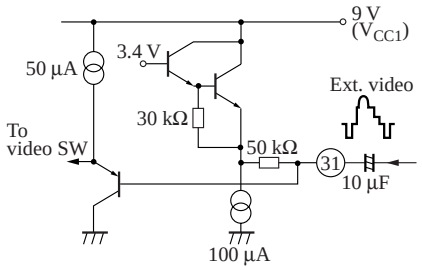	External video input pin • Input pin for external video signal. DC cut input. • Typical 1 V[p-p]	AC 1 V[p-p] (composite) 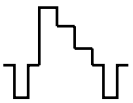 DC approx. 2.0 V
32	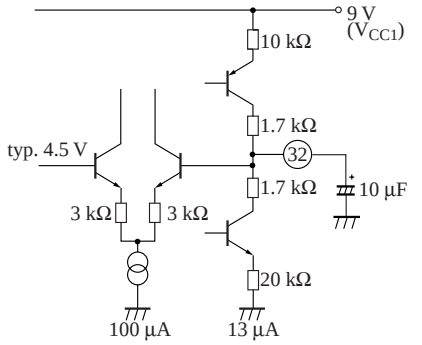	Decoupling pin • S curve inside IC is wide band but DC feedback is applied so that DC voltage of output signal becomes constant. • DC level (typ. 4.5 V) f_S → high: V_{32} → low	DC
33	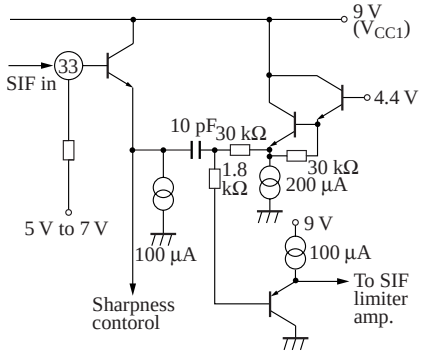	SIF signal input pin • Common use with DC input pin for sharpness control • DC bias is applied from external (DC: 5 V to 7 V for sharpness control)	AC+DC AC $f = f_S$

■ Terminal Equivalent Circuits (continued)

Pin No.	Equivalent circuit	Description	DC (V)
34	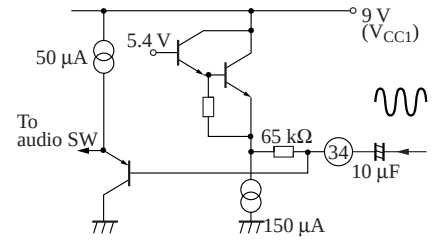	External audio input pin: • Input pin for external audio signal input. DC cut input. • Typical input level should be adjusted to internal sound level.	AC 0 kHz to 20 kHz
35 36	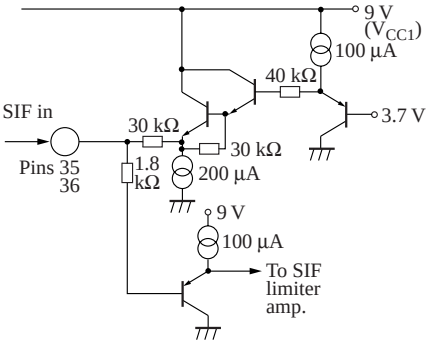	SIF signal input pin: • Input pin of SIF1, SIF2 and is biased in inside.	AC+DC AC $f = f_S$ DC 3.0 V
37	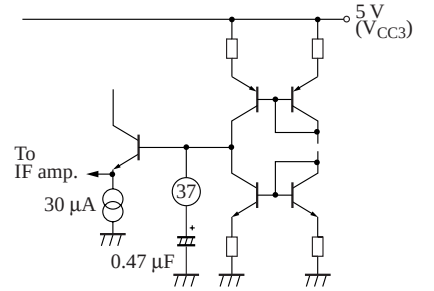	IF AGC filter pin: • Pin for IF AGC filter. The current obtained from peak AGC circuit is smoothed by external capacitor. • Since response becomes faster when C → small but sag tends to appear easily.	DC approx. 2 V
38 40	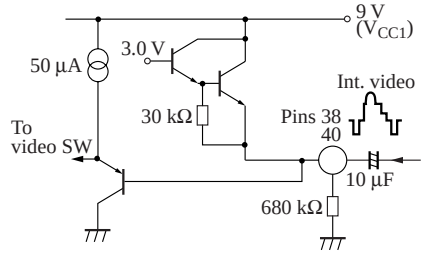	Internal video input pin: • Input pin for the signal detected in the VIF circuit (internal video signal) • Input with DC cut • Typical input: 1 V[p-p]	AC 1 V[p-p] (composite) 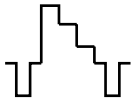 DC level approx. 1.6 V
39	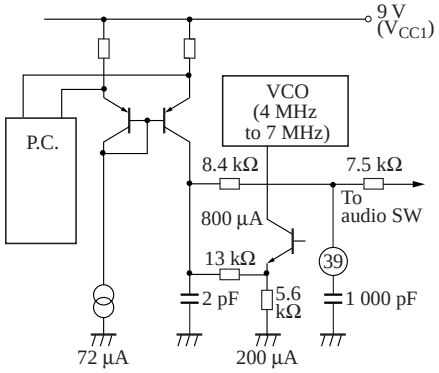	SIF APC filter pin: • Filter pin of SIF APC circuit	DC

■ Terminal Equivalent Circuits (continued)

Pin No.	Equivalent circuit	Description	DC (V)
41	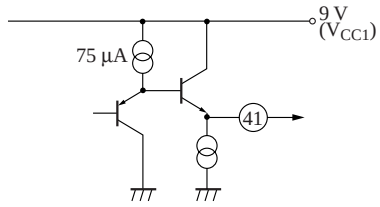	VIF detection output pin: • Adjust to 2 V[p-p] by I^2C bus (uses upper rank 4-bit of 0 A)	AC 2 V[p-p] 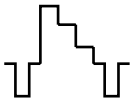
42	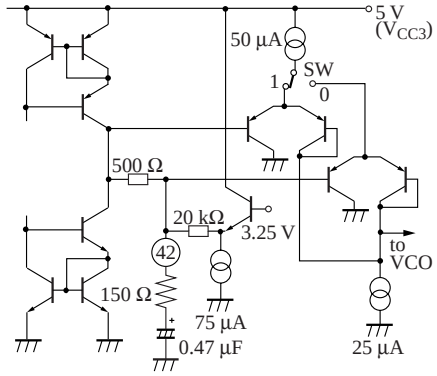	APC1 filter pin: • Filter pin of VIF APC1 circuit • VCO lock detection circuit is incorporated in the IC, and it changes over the time constant of APC filter. • Lock: SW: 0 Unlock: SW: 1	DC approx. 2.5 V
43	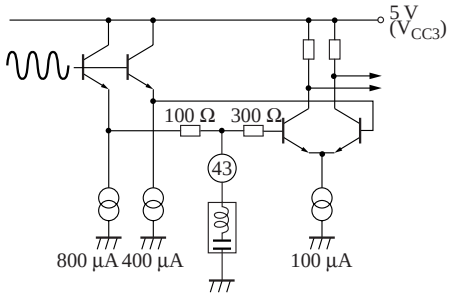	VIF oscillation pin: • Chage the oscillation coil according to VIF frequency. • Oscillation frequency is $\frac{1}{2} \times f_P$	AC $f = f_P / 2$ approx. 0.7 V[p-p] DC level approx. 3.9 V
44	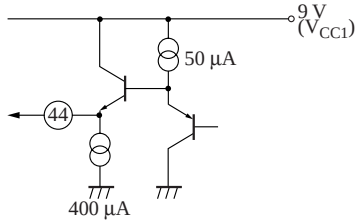	Video output pin: • Int. video1, int. video2 or ext. video signal selected by AV SW is outputted.	AC 2 V[p-p]  DC level approx. 4.5 V
45	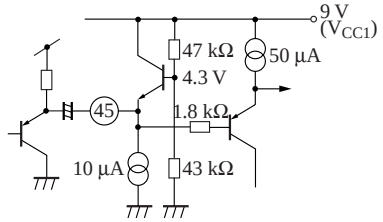	Video input pin: • Input pin of video signal (possible also for composite video) • Typical input 0.6 V[p-p] • Sync. top is clamped to 3.5 V • Video signal should be inputted with low impedance.	AC 0.6 V[p-p] 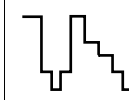

■ Terminal Equivalent Circuits (continued)

Pin No.	Equivalent circuit	Description	DC (V)
46	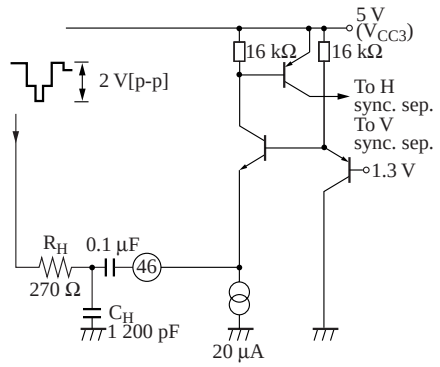	Vertical and horizontal sync. separation input pin: • Sync. top is clamped to 1.3 V.	AC 2 V[p-p] 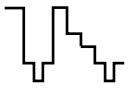
47	—	V_{CC3-2} (typ. 5 V): • Chroma and Jungle circuit use	DC 5 V
48	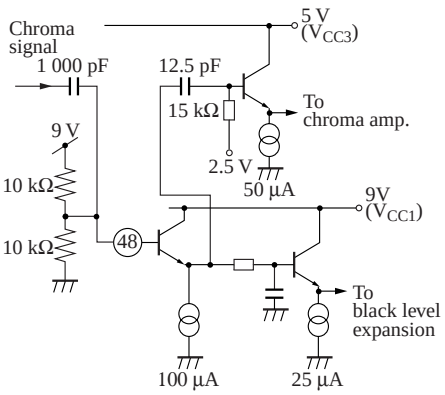	Chroma signal input pin: Black extension start point adjustment pin • Pin 48 is chroma signal input pin and black extension start point is adjusted by DC voltage applied externally.	AC+DC Burst typ. 150 mV[p-p] DC typ. 4.5 V
49	—	GND: Video, chroma and jungle circuit use	DC 0 V
50	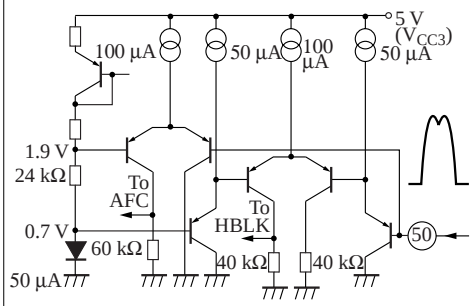	FBP input: • FBP input pin for horizontal blanking and APC circuit • Threshold level HBLK: 0.7 V AFC: 1.9 V • If DC 1.3 V is applied from outside, the state comes to all blanking	AC FBP 
51	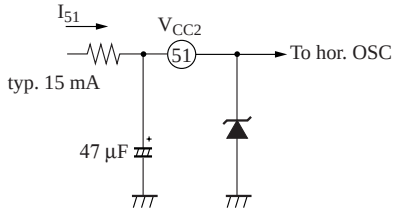	Horizontal stabilized power supply pin: • Stabilized power supply for horizontal circuit start up. Zener circuit is included inside. 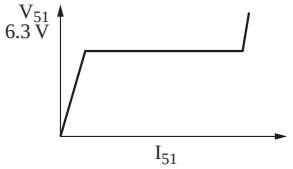	DC 6.3 V

■ Terminal Equivalent Circuits (continued)

Pin No.	Equivalent circuit	Description	DC (V)
52	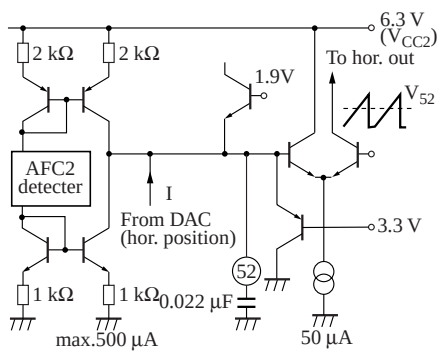	Horizontal AFC2 filter pin: • Pulse phase of FBP and IC inside are compared and capacitor connected to pin 52 is charged or discharged. • Screen center position adjustment is executed by charge or discharge of DC current with DAC. • According to the time from H-out to FBP-in, V_{52} is changed, and slice level of inside saw-tooth waveform is changed.	DC 1.5 V to 3.5 V
53	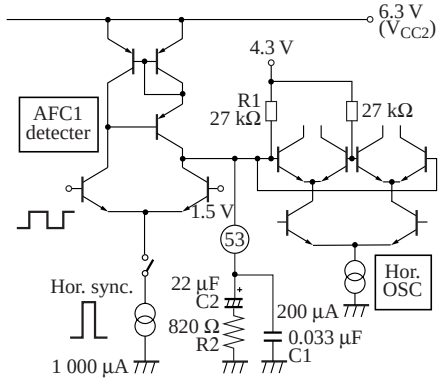	Horizontal AFC1 filter pin: • Pulse phase of horizontal sync. signal and IC inside are compared and capacitor connected to pin 53 is charged or discharged. • R1, R2, C1 and C2 are lag-lead filters for AFC1 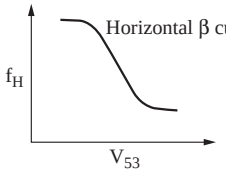	DC typ. 4.3 V
54	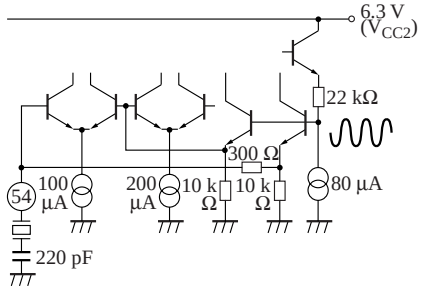	Horizontal oscillation pin: • Oscillation is done at $32 \times f_H \cong 503$ kHz by ceramic resonator. • Horizontal and vertical pulse are made by count-down circuit of IC inside.	AC $f = 32\ f_H$ (approx. 503 kHz)
55	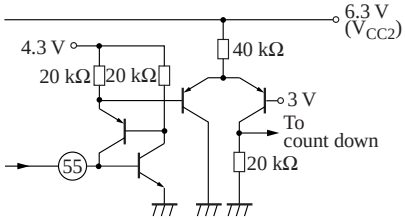	Overvoltage protection input pin: • Input pin for protection circuit against X-ray caused by overvoltage. • Shut-down is started by inside logic circuit when H-out is low. (break-down protection of horizontal drive T_R)	DC Normally 0 V
56	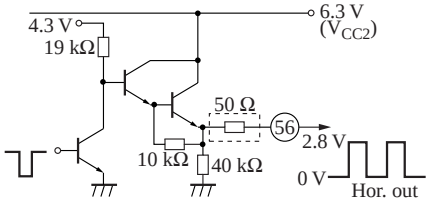	Horizontal pulse output pin: • Pulse duty approx. 36%	AC Pulse 

■ Terminal Equivalent Circuits (continued)

Pin No.	Equivalent circuit	Description	DC (V)
57	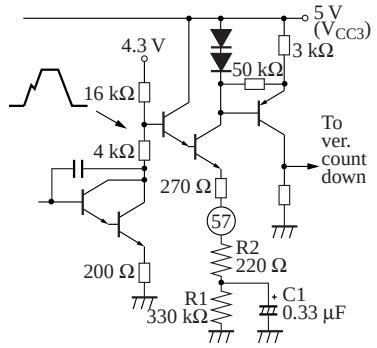	Vertical sync. signal clamp pin: • Peak clamp pin in order to separate vertical sync. signal • Integrating amount of vertical sync. signal itself is determined by time constant of inside but triggering timing is determined by selecting R1 and C1 of external time constant. • Uses with R1 > 200 kΩ • R2 is for emitter current limiting resistor	AC $f = f_V$ 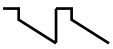
58	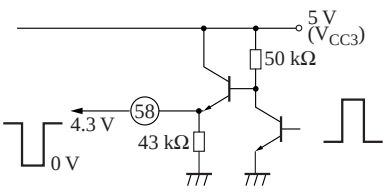	Vertical pulse output pin: • Negative polarity, pulse width 10 H	AC Pulse 
59	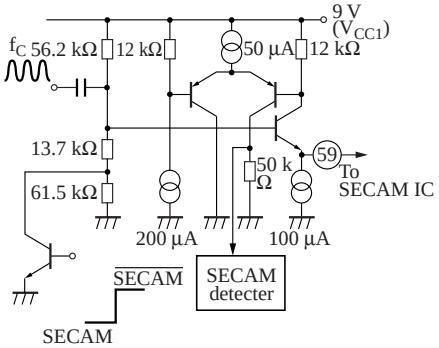	SECAM interface pin: • Inpu/output pin for interface with SECAM IC • SECAM mode is made by taking the curr. of 100 μA or more from pin 59. • At SECAM DC4.4 V+AC250 mV[p-p] • At non-SECAM DC1.1 V+AC250 mV[p-p]: 4.43 MHz or 0 mV[p-p]: 3.58 MHz	AC+DC AC 250 mV[p-p] or 0 mV[p-p] DC 4.4 V or 1.1 V
60 61	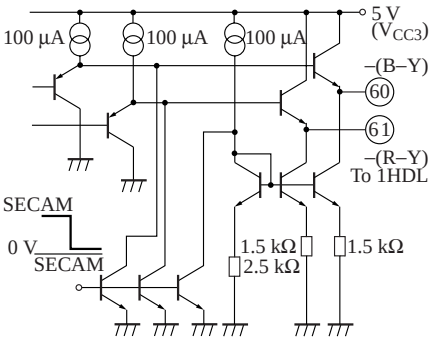	Pin 60: –(B–Y) output pin: Pin 61: –(R–Y) output pin: • At SECAM, output circuit is off and comes to high impedance. • Output to 1HDL	AC –(B–Y)  –(R–Y)  DC level approx. 2.1 V
62	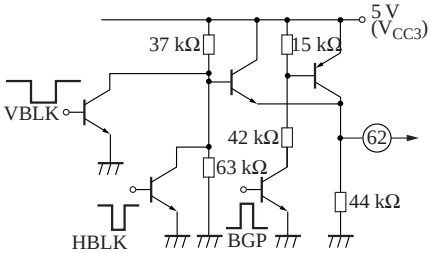	Sandcastle pulse output pin: • Sandcastle pulse is outputted to 1HDL and SECAM IC.	AC Pulse 4.7 V 2.4 V 

■ Terminal Equivalent Circuits (continued)

Pin No.	Equivalent circuit	Description	DC (V)
63 64	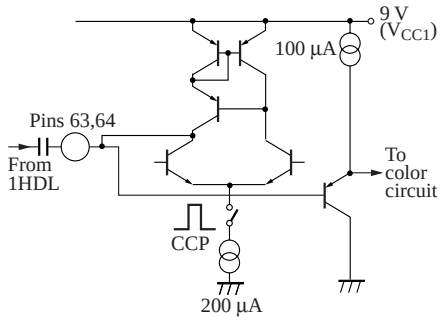	Pin 63: –(B–Y) input pin: Pin 64: –(R–Y) input pin: • Input color difference signal from 1HDL output . • Pedestal level is clamped to 4 V by clamp circuit.	AC –(B–Y)  –(R–Y)  DC level 4 V

■ System Application Example

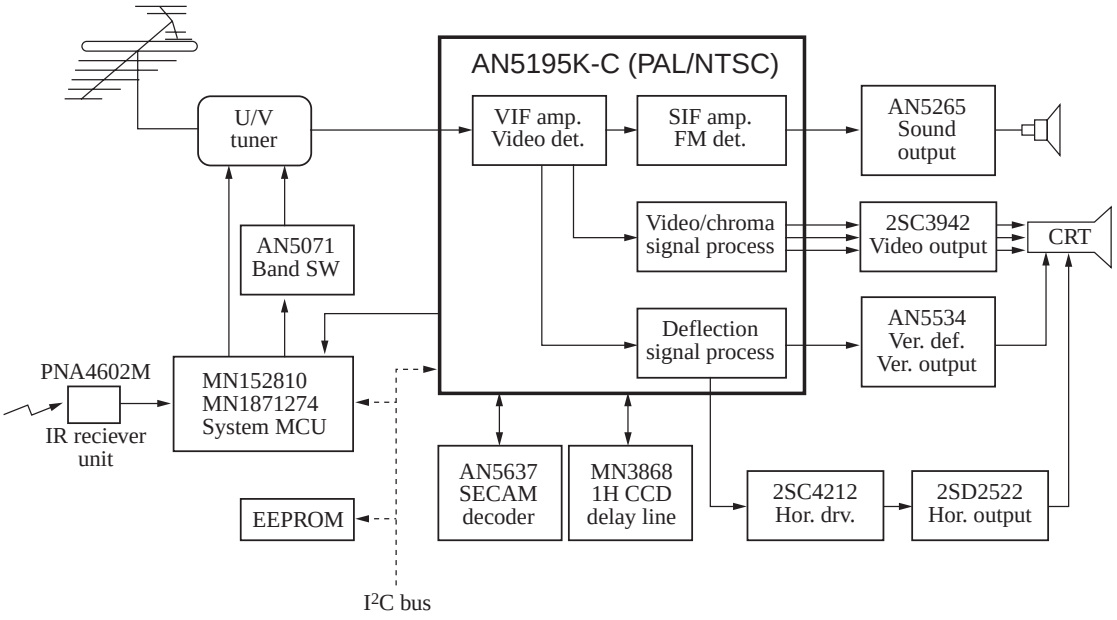

■ Application Circuit Example

