AN3203
Application note

EVL250W-ATX80PL: 250W ATX SMPS demonstration board

Introduction

This application note describes the characteristics and performance of a 250 W wide range input and power factor corrected power supply designed to be used in an ATX application.

Good electrical performance allows meeting the most demanding efficiency targets.

The converter consists of four main blocks:

- A PFC front-end stage using the L6563S PFC controller which generates the +400 V bus voltage.
- An AHB (Asymmetrical half bridge) stage using the L6591 ZVS half bridge controller which performs the conversion from the high voltage bus to the +12 V output providing insulation.
- Two DC-DC post-regulator stages using the L6727 which obtain the +5 V and +3.3 V outputs from the +12 V bus.
- An auxiliary power supply (STANDBY) stage using the VIPer27H in isolated flyback configuration which provides the +5 V_SB output with 10 W power capability.

Figure 1. 250 W ATX SMPS demonstration board

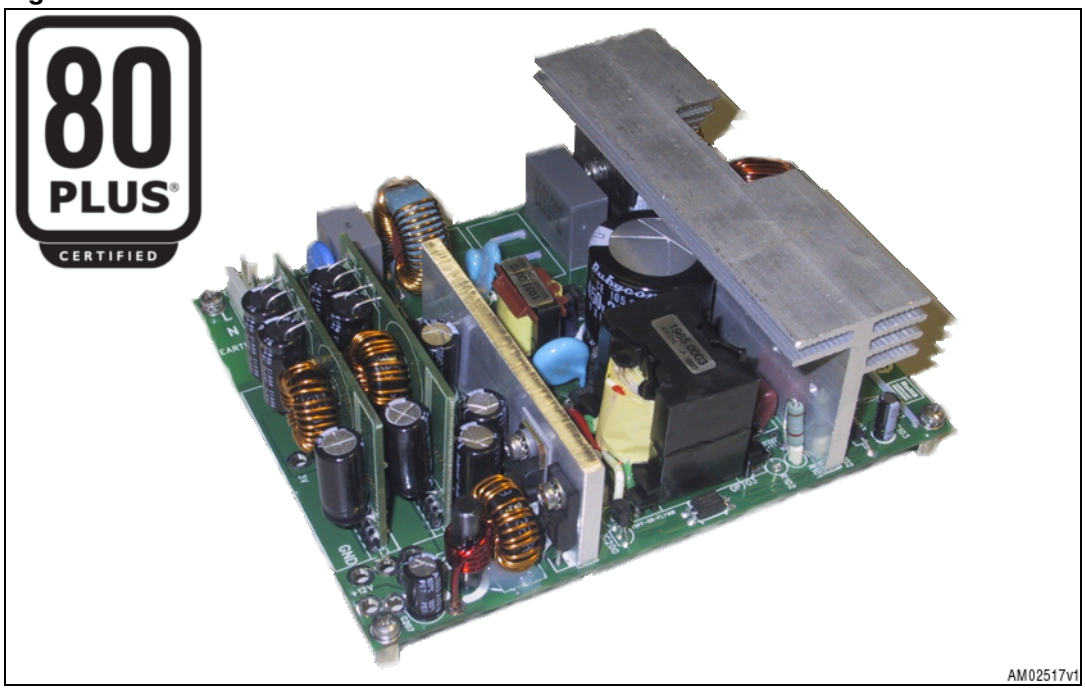

Contents

1 **Main characteristics and circuit description 5**

2 **Asymmetrical half bridge operation 12**

2.1 AHB typical waveforms 12

2.2 Short-circuit protection 16

3 **Complete system 17**

3.1 Overvoltage protection 17

3.2 Load transients 17

3.3 Standby operation 18

4 **Electrical performance 19**

4.1 Efficiency measurement and no-load consumption 19

4.2 Thermal considerations 24

4.3 Harmonic content measurement 25

4.4 Single output configuration 27

5 **Conducted noise measurements (pre-compliance test) 30**

6 **Parts list 32**

7 **PFC coil specification 40**

7.1 Electrical characteristics 40

8 **AHB transformer specification 41**

8.1 Electrical characteristics 41

8.2 Mechanical aspect and pin numbering 42

9 **AUX flyback transformer specification 44**

9.1 Electrical characteristics 44

9.2 Mechanical aspect and pin numbering 46

10 **PCB layout 47**

11 **Revision history 48**

List of tables

Table 1. Efficiency @ 115 Vrms . . . 19
Table 2. Efficiency @ 230 Vrms . . . 19
Table 3. 80 PLUS® program efficiency levels (115Vac) . . . 19
Table 4. 80 PLUS® program efficiency levels (230 Vac) . . . 20
Table 5. Climate Savers Computing Initiative (for multi-output PSU) . . . 20
Table 6. No-load consumption . . . 20
Table 7. Low load efficiency @ 115 Vrms . . . 22
Table 8. Low load efficiency @ 230 Vrms . . . 22
Table 9. PF vs. load . . . 26
Table 10. Single output efficiency @ 115 Vac . . . 27
Table 11. Single output efficiency @ 230 Vac . . . 27
Table 12. AHB efficiency with 400 Vdc input . . . 29
Table 13. EVL250W-ATX80PL bill of materials . . . 32
Table 14. Winding characteristics . . . 40
Table 15. Winding characteristics . . . 42
Table 16. Winding characteristics . . . 45
Table 17. Document revision history . . . 48

List of figures

Figure 1. 250 W ATX SMPS demonstration board . . . 1
Figure 2. Electrical diagram: input EMI filter and PFC stage . . . 8
Figure 3. Electrical diagram: AHB stage . . . 9
Figure 4. Electrical diagram: DC-DC stage . . . 10
Figure 5. Electrical diagram: standby stage . . . 11
Figure 6. AHB primary side key waveforms @ full load . . . 12
Figure 7. AHB zero voltage switching detail @ full load . . . 13
Figure 8. AHB transitions detail @ 20 % rated load . . . 14
Figure 9. AHB secondary side key waveforms @ full load . . . 15
Figure 10. Short-circuit behavior detail . . . 16
Figure 11. Load transient on +12 V output . . . 17
Figure 12. Load transient on +5 V output . . . 18
Figure 13. Load transient on +3.3 V output . . . 18
Figure 14. Efficiency vs. O/P power @ 115 Vac . . . 21
Figure 15. Efficiency vs. O/P power @ 230 Vac . . . 21
Figure 16. No-load consumption . . . 21
Figure 17. Efficiency at low loads . . . 23
Figure 18. Fanless board . . . 24
Figure 19. EN61000-3-2 and JEITA-MITI measurements @ full load . . . 25
Figure 20. EN61000-3-2 and JEITA-MITI measurements @ 75 W in . . . 25
Figure 21. PF vs. input voltage . . . 26
Figure 22. THD vs. input voltage . . . 26
Figure 23. Single output efficiency @ 115 Vac . . . 28
Figure 24. Single output efficiency @ 230 Vac . . . 28
Figure 25. AHB stage only efficiency (Vin = 400 Vdc) . . . 29
Figure 26. CE peak measurement@115 Vac and full load . . . 30
Figure 27. CE peak measurement @ 230 Vac and full load . . . 30
Figure 28. CE average measurement@115 Vac and full load . . . 31
Figure 29. CE average measurement@230 Vac and full load . . . 31
Figure 30. Electrical diagram . . . 40
Figure 31. Mechanical drawing (unit: mm) . . . 40
Figure 32. Electrical diagram . . . 41
Figure 33. Windings position . . . 42
Figure 34. Bottom view . . . 43
Figure 35. Electrical diagram . . . 44
Figure 36. Windings position . . . 45
Figure 37. Bottom view . . . 46
Figure 38. Top side silk screen and copper . . . 47
Figure 39. Bottom side silk screen and copper (mirror view) . . . 47

1 Main characteristics and circuit description

Here are the main characteristics of the power supply:

- Input mains range:
  - Vin: 88 ~ 264 Vrms
  - f: 45 ~ 66 Hz
- Outputs:
  - +12 Vdc ± 2 % - 13.5 A
  - +5 Vdc ± 2 % - 12 A
  - +3.3 Vdc ± 2 % - 8 A
  - +5 V_SB ± 2 % - 2 A
- Standby consumption: < 0.2 W
- Protection:
  - Short-circuit
  - Overload
  - Output overvoltage
  - Brownout
- PCB type and size:
  - FR4
  - Double side CU 70 µm
  - 148 x 120 mm
- Safety: according to EN60950
- EMI: according to EN55022 - class B

The EVL250W-ATX80PL demonstration board is made up of four main blocks, the schematics are shown in *Figure 2*, *3*, *4*, and *5*.

The front-end PFC stage is realized using a boost topology working in line modulated fixed off time (LM-FOT) mode, described in STMicroelectronics' application notes, AN1792; *Design of Fixed-Off-Time controlled PFC pre-regulators with the L6562* and AN3142; *Solution for designing a 400 W Fixed-Off-Time controlled PFC preregulator with the L6563S and L6563H.* The LM-FOT operation offers the advantage of having CCM operation (with lower rms current with respect to TM mode) without the need to use a complex and expensive controller. Therefore, it is possible to use the simple L6563S, enhanced TM PFC controller, which integrates all the functions and protection, needed to control the stage, and an interface with the downstream DC-DC converter.

The power stage of the PFC is realized with inductor L4, MOSFET Q1 and Q2, diode D3, and capacitor C1. The LM-FOT operation is obtained with components D6, R15, C10, R14, C9, R13, and Q3.

The PFC delivers a stable high voltage bus (+400 V nominal) to the downstream converters (AHB and flyback) and provides for the reduction of the current harmonics drawn from the mains, in order to meet the requirements of the European EN61000-3-2 norm and the Japanese JEITA-MITI norm.

The second stage is an asymmetrical half bridge converter, driven by the L6591, a STMicroelectronics controller dedicated to this topology. This IC integrates all the functions

and protection needed by the AHB stage and an interface for the PFC controller. The L6591 includes two gate drivers for the half bridge MOSFETs and a fixed frequency complementary PWM logic with 50 % maximum duty cycle with programmable dead time and current mode control technique.

Other features of this IC are pulse-by-pulse overcurrent protection, transformer saturation detection, overload protection (latched or auto-restart), and programmable soft-start. There is also a high voltage startup circuit, a burst mode logic for low load operation, and the adaptive UVLO onboard, which are not used in this design as they are designed for adapter applications (see AN2852).

The following is a description of the power circuit of this stage. The half bridge switches Q101 and Q102 are connected to the output voltage of the PFC. The half bridge node drives the series of C101 (DC blocking capacitor) and the primary side of the transformer T1. This transformer has two secondary windings with a center tap connected to the secondary ground. The other ends are connected to the sources of MOSFETs Q201 and Q202, which replace output diodes in order to perform the synchronous rectification. Two extra windings allow, with few external passive components, a self driven synchronous rectification to be obtained. This solution allows efficiency to be increased without the extra cost of a dedicated SR controller IC.

Q201 and Q202 drains are connected to the output inductor L201 that, together with output capacitors C201 and C202, acts as a low pass filter. The signal +12 VA is then post filtered (with L5 and C207) to obtain the +12 V output voltage.

The design of transformer T1 is a trade-off between ZVS operation and the required electrical performance/efficiency. ZVS can be obtained acting on the magnetizing inductance or on the primary side leakage inductance. In more detail, ZVS could be met by:

- Decreasing the magnetizing inductance
- Increasing the leakage inductance

Low values of magnetizing inductance generate high magnetizing current. This helps to reach ZVS but it also increases the total primary side rms current and therefore the related losses. In this design a value of 500 µH has been selected.

On the other hand, ZVS could be obtained by increasing the leakage inductance. If such a parameter is increased, the primary side current takes more time before reversing its direction and therefore ZVS is more easily met. A high leakage inductance value leads to duty cycle losses, reducing the effective range of duty cycle usable. This creates problems with hold-up requirements and makes it necessary to work with very narrow duty cycles with nominal input voltage generating high rms currents in the circuit.

A value of 12 µH has been selected as the leakage inductance.

Because of these reasons, in this design ZVS is always met at low side MOSFET turn-on while it is met only for medium-high loads at high side MOSFET turn-on. Even at medium-low loads Q101 is turned on with a Vds well below the half bridge input voltage.

The L6591 LINE pin is used for startup sequencing. It shares with the L6563S the voltage divider made up of R20, R21, R22, R29, and R26 that senses the PFC output voltage. The AHB stage is activated when the bulk voltage reaches about 380 V.

The DISABLE pin (latched protection) is driven by the L6563S PWM_LATCH pin and stops the AHB stage in case of PFC feedback disconnection.

The oscillator is programmed in order to have a switching frequency of about 80 KHz and to use the minimum dead time (about 310 ns).

The PFC_STOP pin is the interface for the PFC controller, it is connected to the L6563S RUN pin through R104 and it stops the PFC operation (not latched) in case of overload, output short-circuit or transformer saturation detection.

The +5 V and +3.3 V are obtained from the +12 VA bus (AHB output) thanks to two DC-DC converters mounted on two daughter boards. These stages are driven by the L6727, single phase PWM controller. The topology is a standard step down. For more information please refer to the L6727; *Single phase PWM controller* datasheet.

The last stage is the auxiliary power supply that provides the +5 V_SB output (2A capability) and the VCC supply for the L6563S and L6591. It is realized with a standard flyback topology operating in CCM/DCM with fixed frequency using the VIPer27H. This stage takes the PFC output voltage as input and is always working when the mains is plugged in. The VIPer27H has all the protection needed to safely drive the standby stage. It protects the circuitry in case of overload, output short-circuit, or output overvoltage.

All the other stages (and therefore the outputs +12 V, +5 V and +3.3 V) can be turned on / off using the signal PS_ON. If it is disconnected or connected to GND, the OPTO2 current is zero, Q601 is open and the VCC of the L6563S and L6591 is zero. If PS_ON is connected to +5 V_SB, the OPTO2 current turns Q601 on. This BJT, together with the Zener diode ZD601, acts as a linear regulator and provides the supply to the PFC and AHB controllers.

The same optocoupler is used to turn off the PFC and AHB stages in case of an overvoltage on one of the three main outputs. Such protection is realized with three Zener diodes (one for each output) that set the OVP thresholds. If one of the three output voltages goes over its threshold, the Zener diode conducts and turns on the latch realized with Q604 and Q605. The current in OPTO2 is reduced to zero (overriding the PS_ON information) and the L6563S and L6591 are turned off.

Only the +5 V_SB stays on and continues to keep the protection latched.

Figure 2. Electrical diagram: input EMI filter and PFC stage

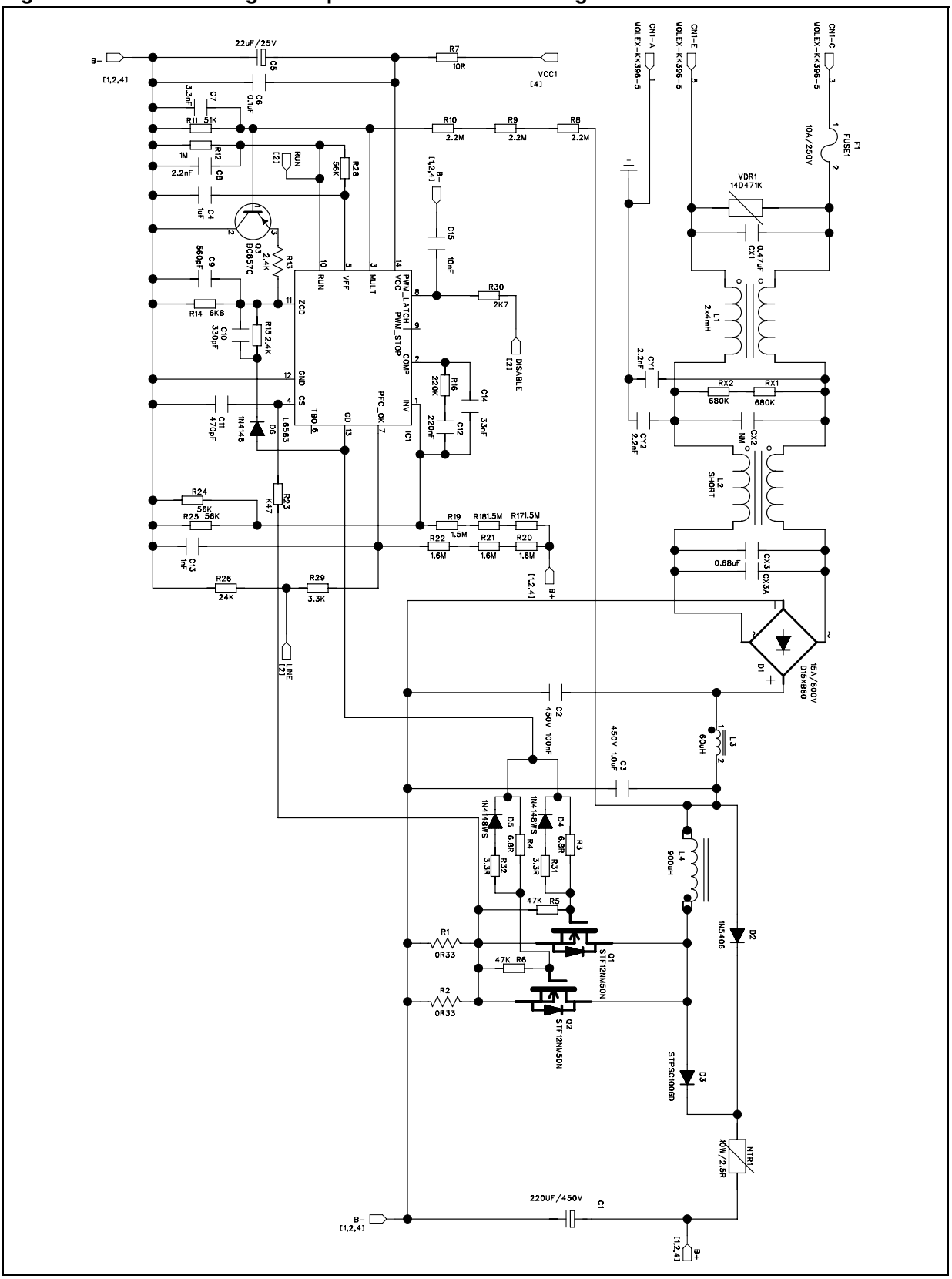

Figure 3. Electrical diagram: AHB stage

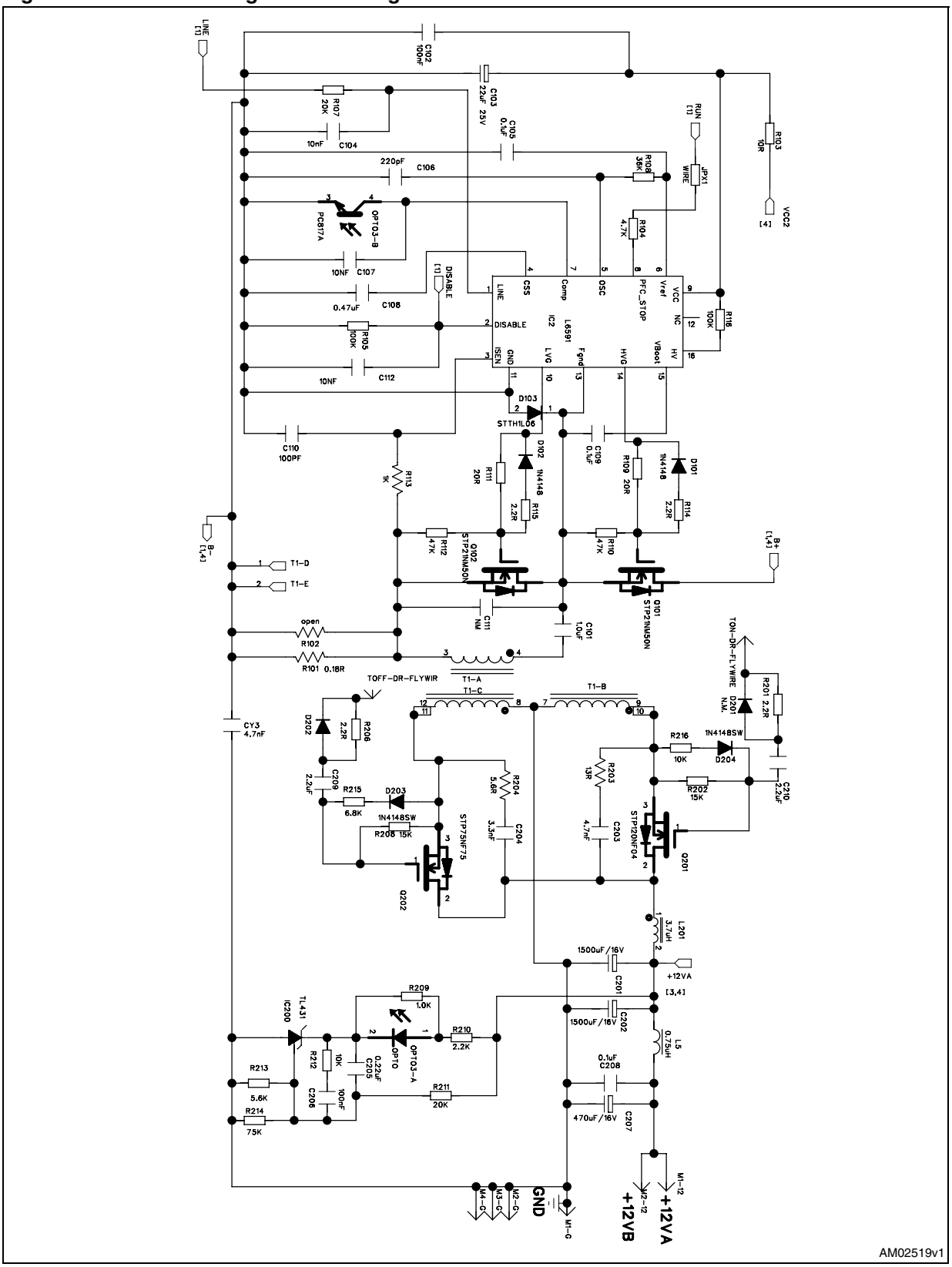

Figure 4. Electrical diagram: DC-DC stage

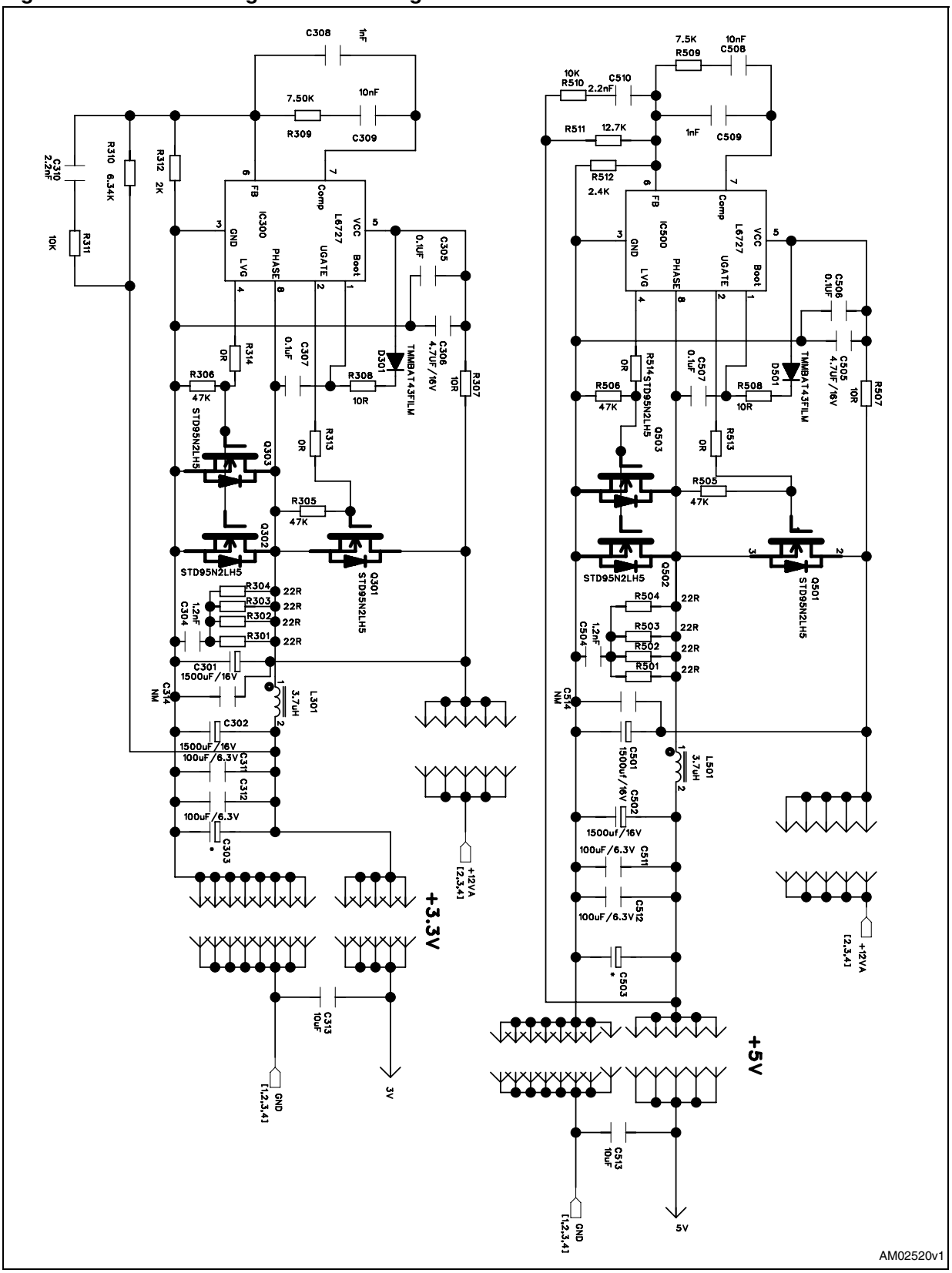

Figure 5. Electrical diagram: standby stage

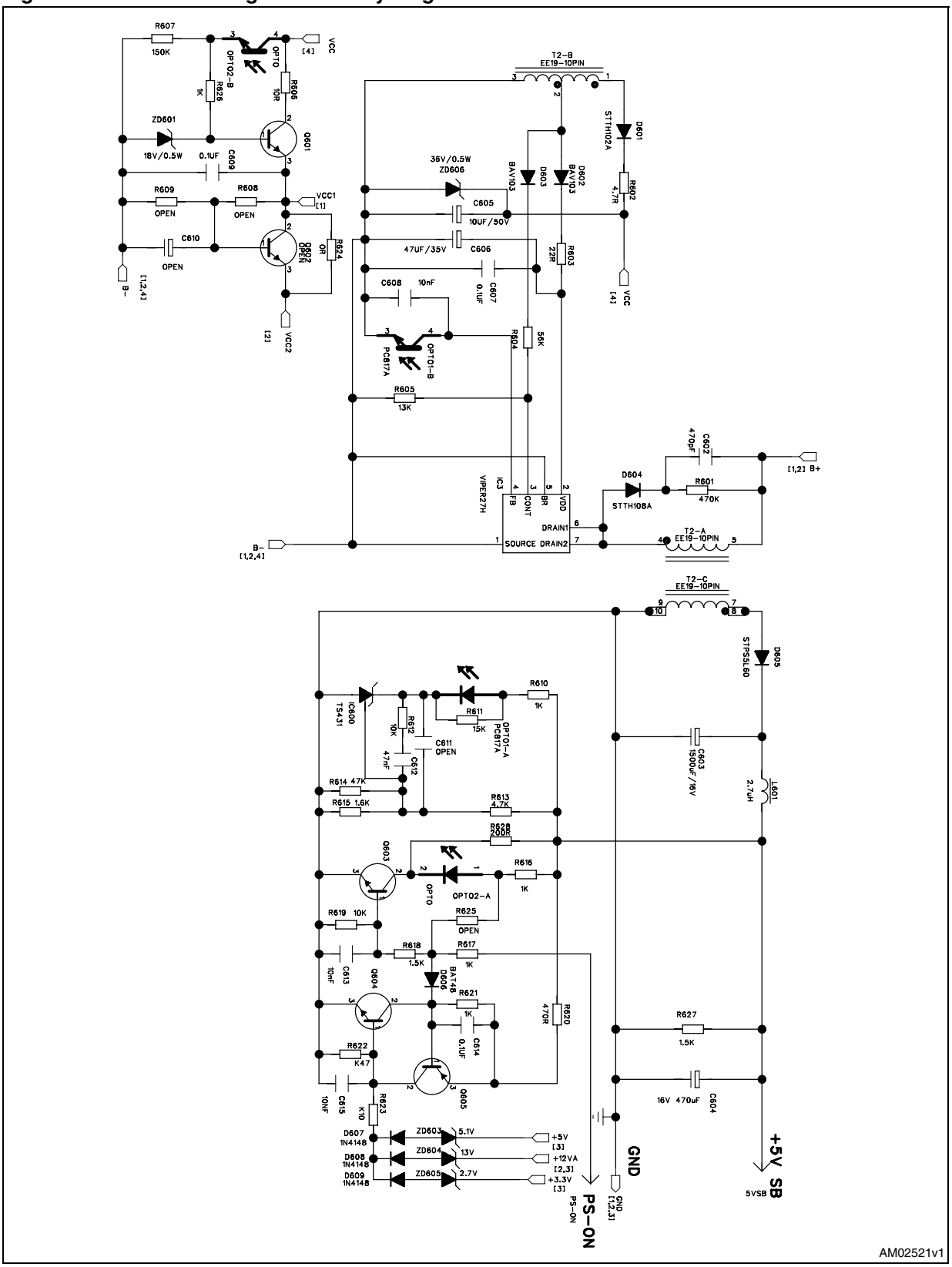

2 Asymmetrical half bridge operation

2.1 AHB typical waveforms

In *Figure 6* the primary side key waveforms during steady-state operation with full load applied are shown. *Figure 7* shows the detail of the two transitions during one switching cycle.

The AHB stage has been designed to operate at about 80 kHz with a nominal input voltage of 400 V (PFC output bus). The transformer design is the result of a trade-off between the half bridge MOSFETs zero voltage switching (ZVS) operation requirements, the primary rms current, and duty cycle losses. In fact, ZVS can be achieved by reducing the magnetizing inductance or increasing the leakage inductance. With the output power of this board, the first solution implies having very high rms primary current which leads to high losses. The second solution introduces the so called “duty cycle losses”. When the leakage inductance is de-magnetizing, the voltages on the secondary side windings are zero and therefore the output mean value is reduced with respect to the same half bridge duty cycle and negligible leakage inductance. Duty cycle losses limit the hold-up capability of the power supply because they increase the minimum input voltage that guarantees output regulation.

In this design the system works with ZVS for both MOSFETs at full load. Because of the intrinsic asymmetry of the topology the behavior of the two switches is different. When the load is reduced the low side MOSFET always operates in ZVS while the high side one starts loosing ZVS. The high side MOSFET never turns on with full bus voltage applied between its drain and source. As shown in *Figure 8*, even at 20 % of rated load the Vds at turn-on is about 100 V, definitely lower compared with the 400 V of a hard switching solution.

This design can therefore meet both efficiency and dynamic requirements.

Figure 6. AHB primary side key waveforms @ full load

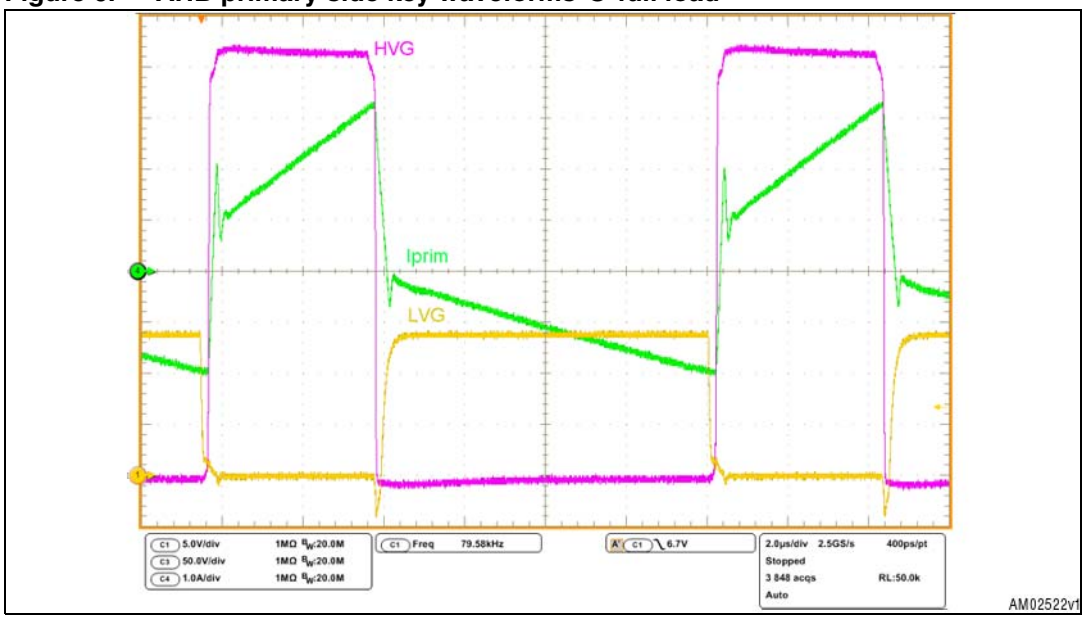

Ch1: LVG pin voltage (yellow)

Ch3: HVG pin voltage (purple)

Ch4: Primary winding current (green)

The signal HVG is the sum of the half bridge node (FGND pin of L6591) and the high side gate driver voltages. This peculiarity allows both waveforms and the ZVS operation for the high side MOSFET to be checked. The driver activation is visible on the HVG signal when there is a small voltage step on the high part of the waveform.

Figure 7. AHB zero voltage switching detail @ full load

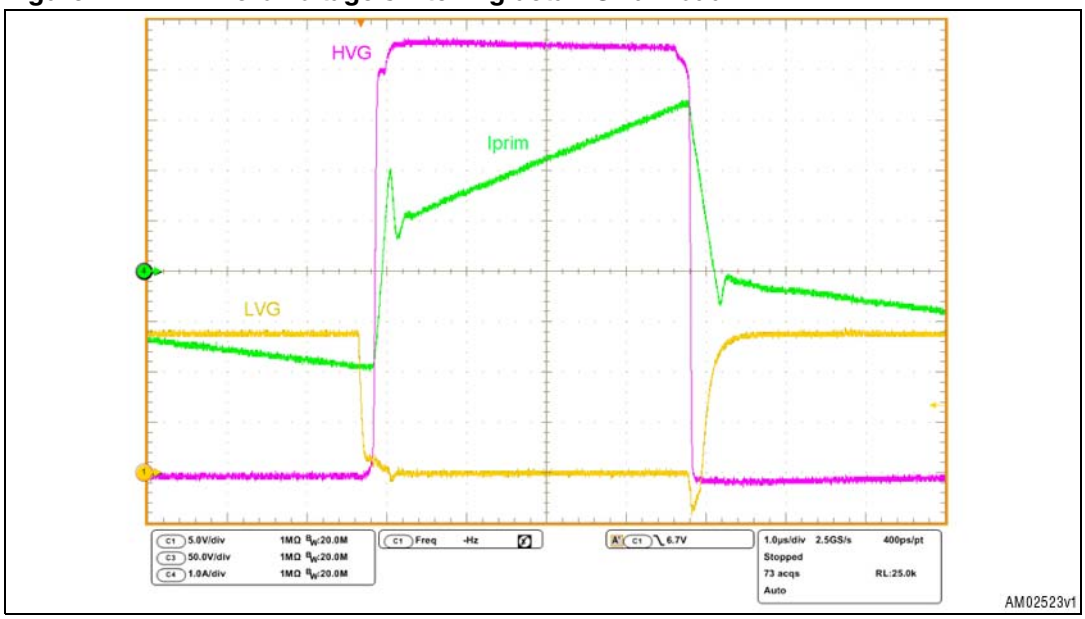

Ch1: LVG pin voltage (yellow)

Ch3: HVG pin voltage (purple)

Ch4: Primary winding current (green)

Figure 8. AHB transitions detail @ 20 % rated load

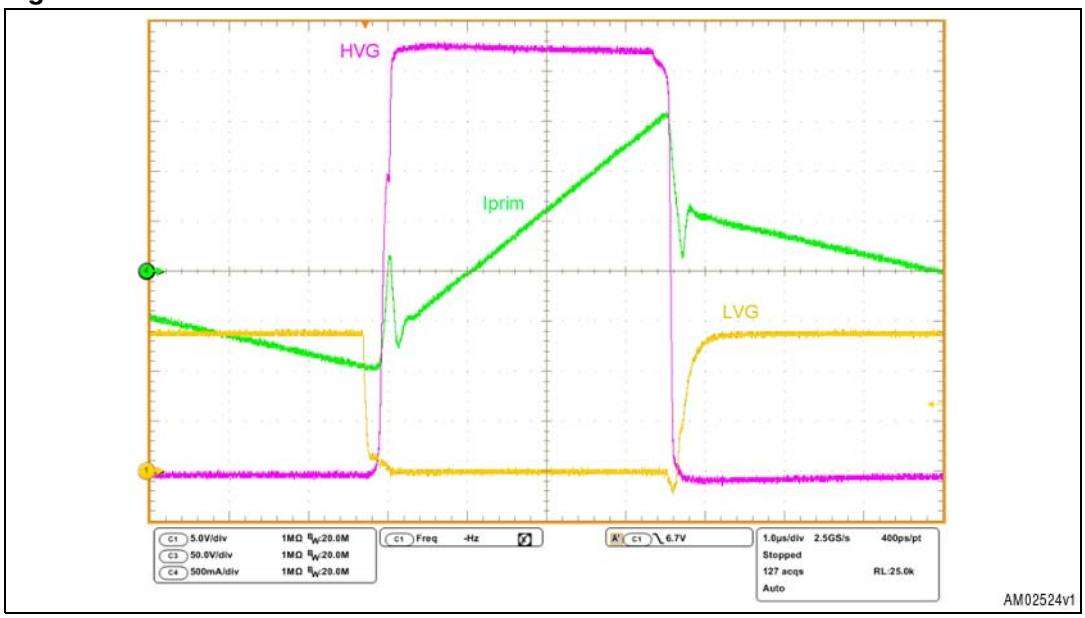

Ch1: LVG pin voltage (yellow)

Ch3: HVG pin voltage (purple)

Ch4: Primary winding current (green)

The key waveforms at the secondary side are shown in *Figure 9*. It is interesting to note that, while the current is swapped between the two SR MOSFETs, the voltage at their drain is nearly zero. The time required for current swap is directly proportional to the primary leakage inductance. As mentioned before, the effect of this phenomenon is the duty cycle losses.

Figure 9. AHB secondary side key waveforms @ full load

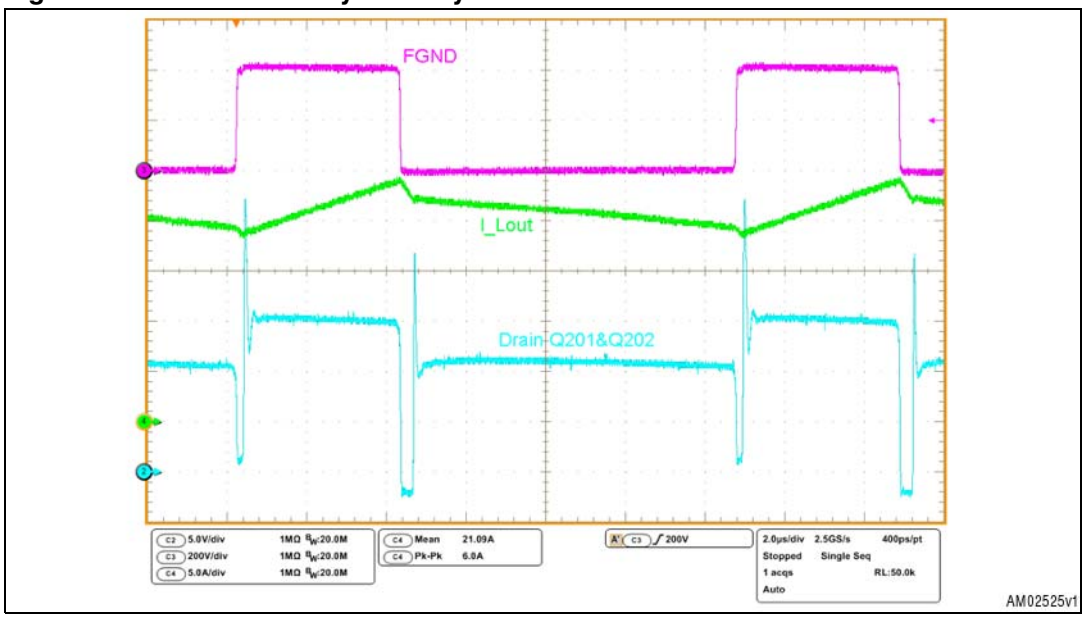

Ch2: Q201 and Q202 drain pin (blue)

Ch3: FGND pin voltage (purple)

Ch4: Diode D13 current (green)

In order to improve the overall efficiency of the power supply, synchronous rectification has been used. The two AHB output diodes have been replaced with two MOSFETs. A self driven technique has been used to obtain a cheap solution. Two extra windings at the secondary side generate the two square waves that, opportunely shifted, drive the two SR MOSFETs gates directly. Referring to Q201, the extra winding (realized with just one turn) starts from transformer pin 10 and ends in TON_DR_FLYWIRE. C210, D204, and R216 are used to shift the voltage at the correct level to drive the MOSFET. R202 helps to keep the MOSFET off if no driving signal is applied. A similar circuit drives the gate of Q202 starting from the TOFF_DR_FLYWIRE signal.

2.2 Short-circuit protection

In case of a short-circuit at the AHB output the overload protection (OLP) is activated. *Figure 10* shows the pins involved in this function. When the short-circuit is applied, the COMP pin saturates high. The IC detects this condition and starts charging the SS capacitor. When the SS voltage reaches 5 V the system is shut down, when it reaches 6.4 V the IC is latched. The PFC controller is also stopped: when the L6591 activates the protection, the PFC_STOP signal pulls the L6563S RUN pin down to below the 0.8V threshold. The latch is kept thanks to the auxiliary stage that remains active and provides the VCC voltage.

In order to restart the system it is necessary to recycle the L6591 VCC voltage between the UVLO thresholds. This can be done by removing the PS_ON signal in the auxiliary stage.

Figure 10. Short-circuit behavior detail

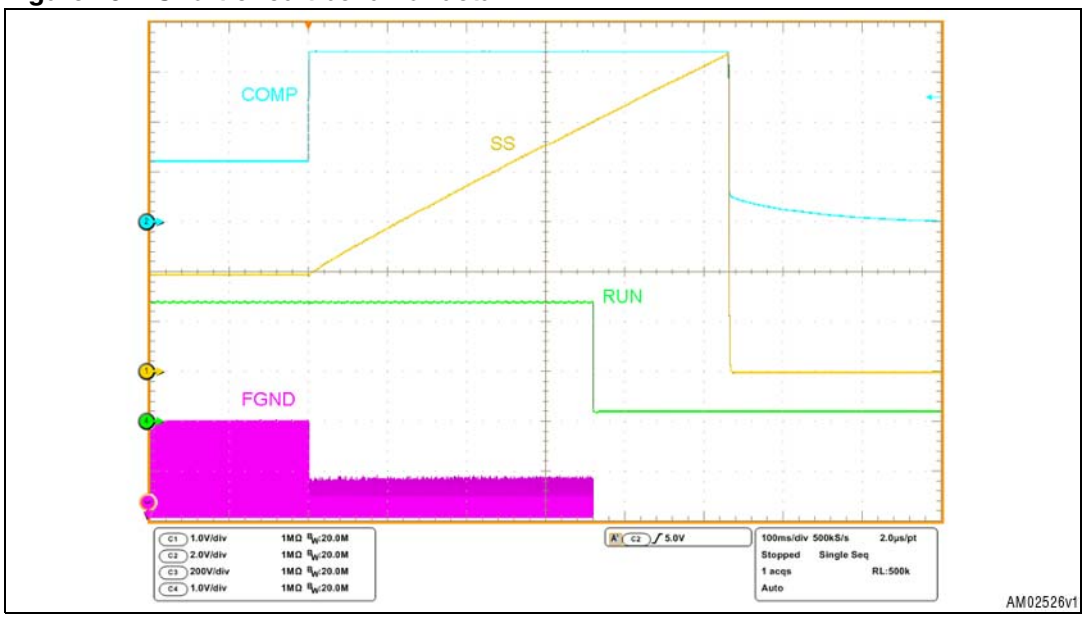

Ch1: SS pin voltage (yellow)

Ch2: COMP pin voltage (blue)

Ch3: FGND pin voltage, (purple)

Ch4: L6563S RUN pin voltage (green)

3 Complete system

3.1 Overvoltage protection

Every output is protected against overvoltage. The +12 V, +5 V and +3.3 V are monitored on the auxiliary power supply schematic page. They use three Zener diodes to fix the three overvoltage thresholds. In case one of the three voltages exceeds its threshold the latch realized with Q604 and Q605 is turned on and the VCC for the L6591 and L6563S is removed.

The two outputs +5 V and +3.3 V also have an overvoltage protection integrated into the L6727 controller.

The +5 V_SB output is protected using the OVP protection of the VIPer27H that senses its output voltage through the auxiliary winding. A threshold on the CONT pin detects the OVP condition and stops the IC operation. This protection has an auto-restart behavior.

3.2 Load transients

The following figures show the behavior of the outputs during load transients. Each image shows the transition from 20 % to 100 % of rated current and vice versa for a single output voltage. The current slope is 0.5 A/µs for all the current variations.

Figure 11. Load transient on +12 V output

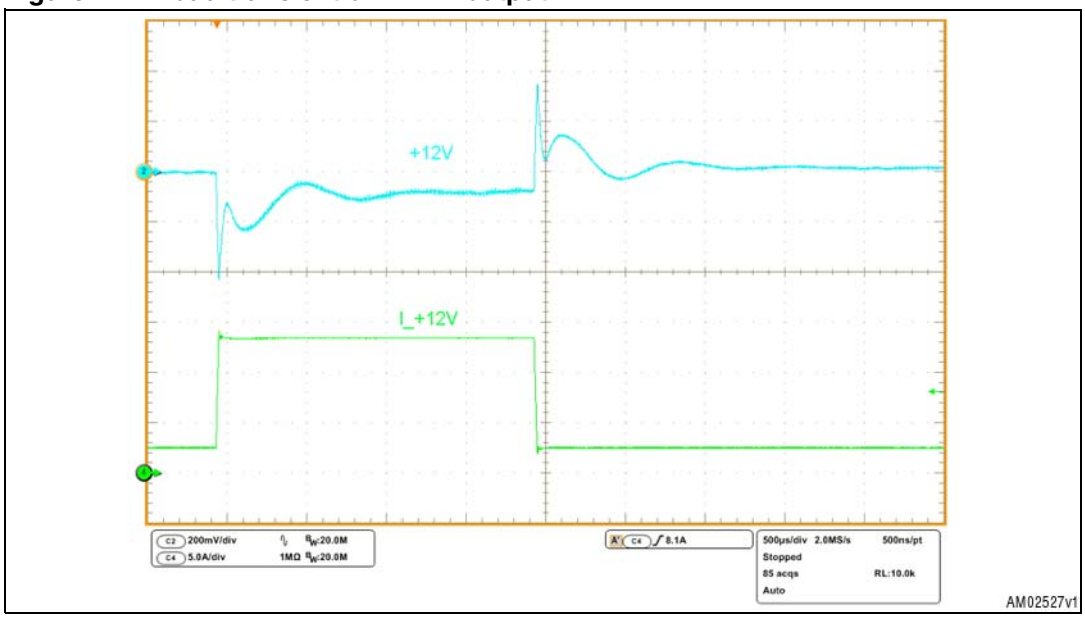

Figure 12. Load transient on +5 V output

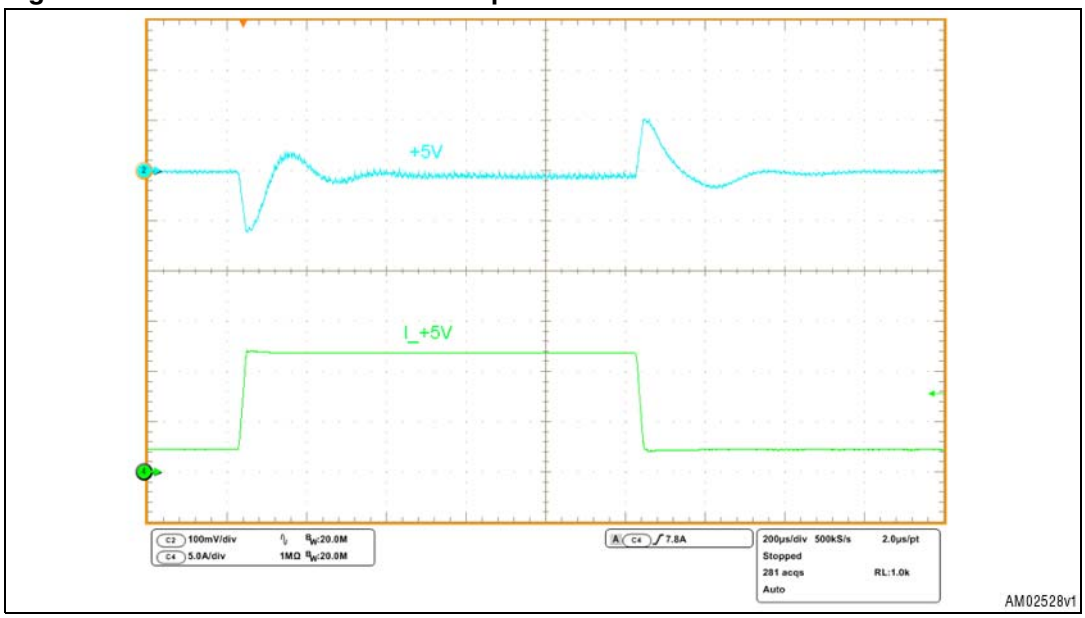

Figure 13. Load transient on +3.3 V output

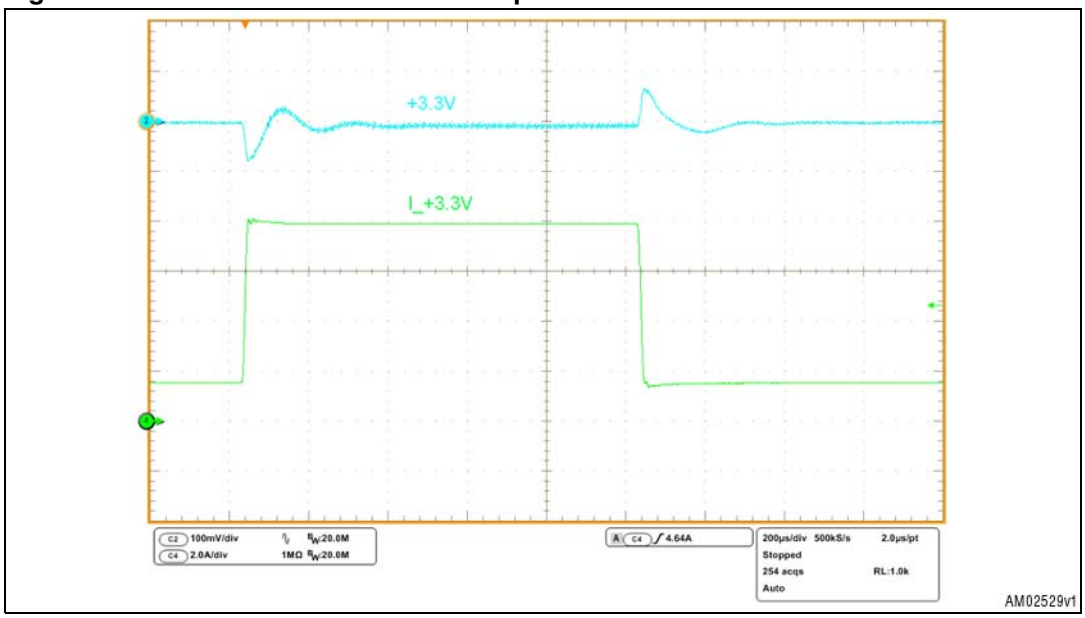

3.3 Standby operation

When the PS_ON is not high, the system is in standby mode. Good performance is obtained thanks to the VIPer27H high voltage converter. Efficiency and no-load consumption values are shown in the next chapter.

4 Electrical performance

4.1 Efficiency measurement and no-load consumption

The efficiency measurements taken at the two nominal voltages are seen in the following tables. The +5 V_SB output was unloaded during these measurements.

Table 1. Efficiency @ 115 Vrms

Load	+12 V @load[A]		+5 V @load[A]		+3.3 V @load[A]		Pout [W]	Pin [W]	Eff [%]
20 %	12.13	2.702	5.02	2.409	3.33	1.6	50.196	58.5	85.81 %
25 %	12.13	3.374	5.019	3.008	3.329	2.004	62.695	71.97	87.11 %
50 %	12.13	6.749	5.012	6.007	3.325	3.999	125.27	140.22	89.34 %
75 %	12.13	10.122	5.003	9.006	3.318	6.008	187.77	211.19	88.91 %
100 %	12.12	13.5	4.996	12.003	3.313	8.001	250.09	285.41	87.63 %

Table 2. Efficiency @ 230 Vrms

Load	+12 V @load[A]		+5 V @load[A]		+3.3 V @load[A]		Pout [W]	Pin [W]	Eff [%]
20 %	12.14	2.701	5.019	2.408	3.329	1.599	50.199	58.62	85.63 %
25 %	12.14	3.374	5.018	3.008	3.328	2.003	62.720	71.52	87.70 %
50 %	12.13	6.754	5.011	6.006	3.323	3.998	125.31	138.07	90.76 %
75 %	12.12	10.122	5.004	9.006	3.318	6.008	187.68	207.49	90.45 %
100 %	12.12	13.5	4.997	12.002	3.313	8.001	250.10	279.66	89.43 %

The 80 PLUS® program fixes several efficiency levels that describe how energy-efficient a computer power supply is. The program defines the minimum efficiency requirements at 20 %, 50 %, 100 % of rated load and a minimum power factor requirement.

According to the program a power supply could be classified in 4 or 5 levels:

Table 3. 80 PLUS® program efficiency levels (115Vac)

Level	Eff @ 20 %	Eff @ 50 %	Eff @ 100 %	PF (@ load %)
80 PLUS	> 80 %	> 80 %	> 80 %	> 0.9 @ 100 %
80 PLUS Bronze	> 82 %	> 85 %	> 82 %	> 0.9 @ 50 %
80 PLUS Silver	> 85 %	> 88 %	> 85 %	> 0.9 @ 50 %
80 PLUS Gold	> 87 %	> 90 %	> 87 %	> 0.9 @ 50 %
80 PLUS Platinum	> 90 %	> 92 %	> 89 %	> 0.95 @ 50 %

Note: This table refers to power supplies for desktops, workstations, and non-redundant server applications with 115 Vac mains

Table 4. 80 PLUS® program efficiency levels (230 Vac)

Level	Eff @ 20%	Eff @ 50%	Eff @ 100%	PF (@ load%)
80 PLUS Bronze	> 81%	> 85%	> 81%	> 0.9 @ 50%
80 PLUS Silver	> 85%	> 89%	> 85%	> 0.9 @ 50%
80 PLUS Gold	> 88%	> 92%	> 88%	> 0.9 @ 50%
80 PLUS Platinum	> 90%	> 94%	> 91%	> 0.95 @ 50%

Note: This table refers to power supplies for redundant, data center applications with 230Vac mains

This demonstration board is compliant with the 80 PLUS® Silver specifications (for PF data please refer to *Table 9*). Since this is basically a desktop PC power supply, the tests were performed at 115 Vac. Certification report and other details can be found on the 80 PLUS® web site.

Similar levels of efficiency and power factor are defined also by the Climate Savers Computing Initiative. According to the measurements carried out, the demonstration board is compliant with “Climate Savers Computing Silver” level.

Table 5. Climate Savers Computing Initiative (for multi-output PSU)

Load condition	Bronze		Silver		Gold	
	Efficiency	PF	Efficiency	PF	Efficiency	PF
20 %	82 %	0.8	85 %	0.8	87 %	0.8
50 %	85 %	0.9	88 %	0.9	90 %	0.9
100 %	82 %	0.95	85 %	0.95	87 %	0.95

Table 6 shows the no-load consumption. These values are taken with the signal PS_ON kept low, therefore only the auxiliary stage is active and only the +5 V_SB output is present. The board showed very good values (below 200 mW over the whole input voltage range), especially when considering that the inactive stages have a certain residual consumption (only the voltage dividers in the input stage waste about 100 mW @ 230 Vac).

Table 6. No-load consumption

Vin [Vac]	90	115	135	180	230	264
Pin [mW]	59	70	82	113	161	199

Figure 14 and *Figure 15* show the graph of the efficiency vs. output power at the two nominal input voltages while *Figure 16* shows the graph of the input power vs. input voltage with no load applied. It is clearly visible that the power supply is compliant with the 80 PLUS® SILVER specification and it is very close to the GOLD one.

Figure 14. Efficiency vs. O/P power @ 115 Vac

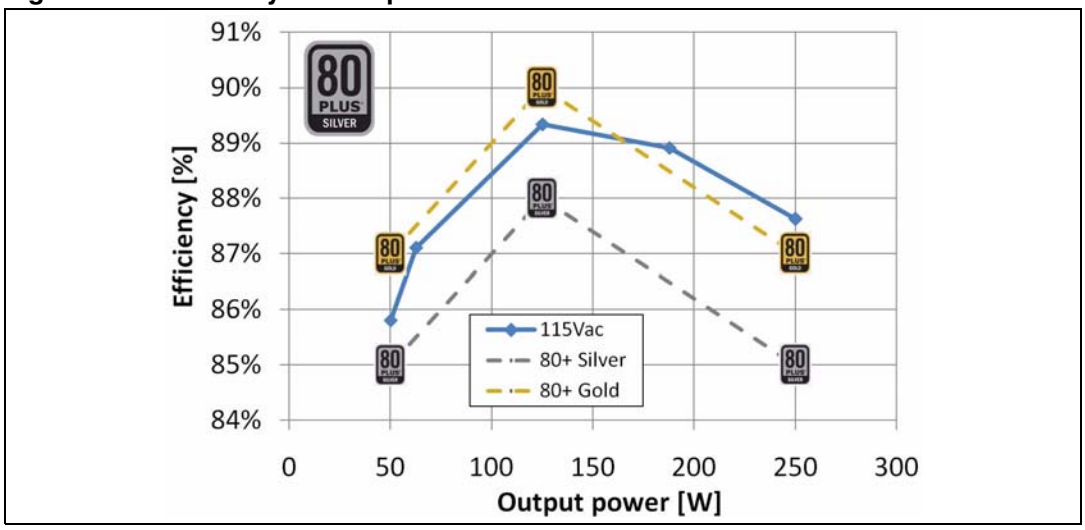

Figure 15. Efficiency vs. O/P power @ 230 Vac

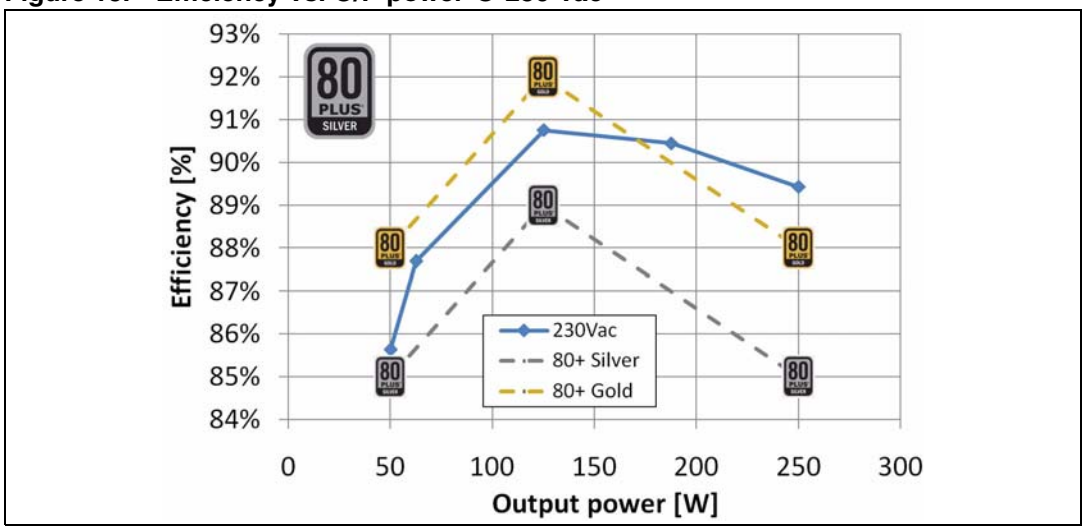

Figure 16. No-load consumption

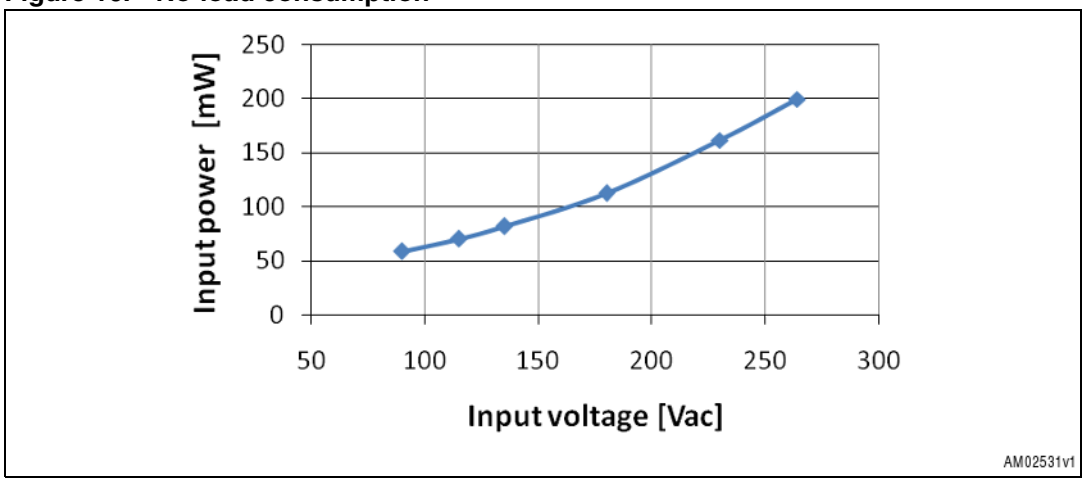

Some measurements with low output loads were also taken. They refer only to the operation of the auxiliary stage, while the other stages are off. Results are shown in *Table 7* and *Table 8* and plotted in *Figure 17*. The standby consumption allows the US Executive Order 13221 - “1-Watt Standby” to be met. To be more precise, when the output power is reduced to 0.5 W, the input power is lower than 1 W (efficiency greater than 50 %). This is a very common requirement for power supply manufacturers.

Table 7. Low load efficiency @ 115 Vrms

Vout [V]	Iout [A]	Pout [W]	Pin [W]	Eff [%]
4.993	0.1	0.499	0.688	72.6 %
4.993	0.2003	1.000	1.312	76.2 %
4.993	0.3007	1.501	1.933	77.7 %
4.993	0.3996	1.995	2.544	78.4 %
4.993	0.5	2.497	3.163	78.9 %
4.993	0.6002	2.997	3.812	78.6 %
4.993	0.7006	3.498	4.501	77.7 %
4.993	0.7994	3.991	5.114	78.0 %
4.993	0.8998	4.493	5.664	79.3 %
4.993	1.0001	4.993	6.209	80.4 %

Table 8. Low load efficiency @ 230 Vrms

Vout [V]	Iout [A]	Pout [W]	Pin [W]	Eff [%]
4.994	0.1	0.499	0.826	60.5 %
4.994	0.2002	1.000	1.471	68.0 %
4.994	0.3006	1.501	2.13	70.5 %
4.994	0.3995	1.995	2.798	71.3 %
4.994	0.4999	2.497	3.486	71.6 %
4.994	0.6001	2.997	4.161	72.0 %
4.994	0.7006	3.499	4.806	72.8 %
4.994	0.7994	3.992	5.304	75.3 %
4.994	0.8997	4.493	5.934	75.7 %
4.994	1	4.994	6.667	74.9 %

Figure 17. Efficiency at low loads

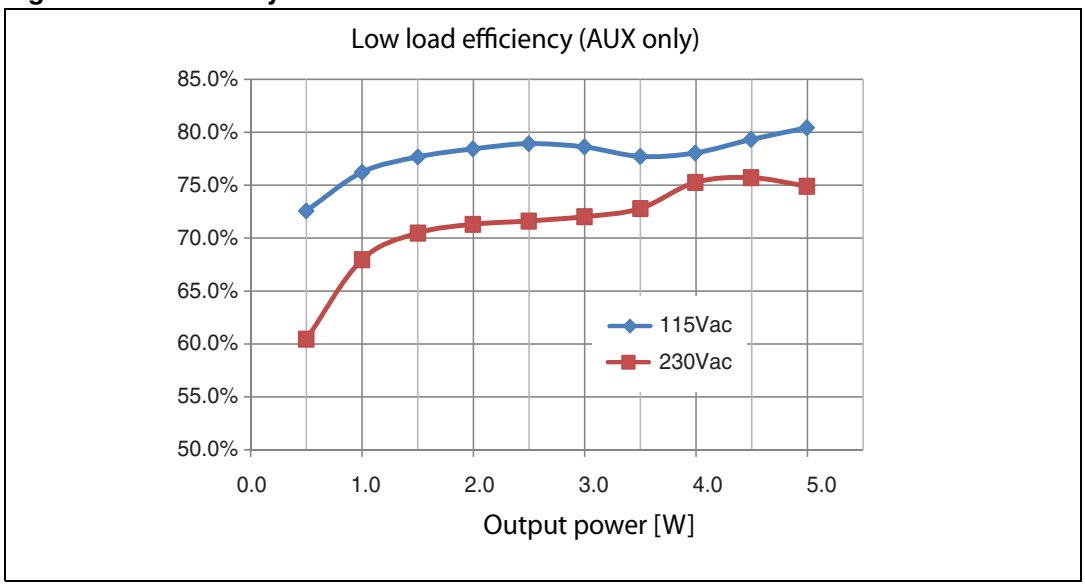

4.2 Thermal considerations

This demonstration board has been designed for operation with forced air cooling, very common in ATX power supply applications. As the component temperatures depend on the type of fan used and on the airflow path inside the board housing, a thermal map of the board isn't significant and has not been taken. When the system works at 25 °C with full load and no forced air, temperatures are not so high. If a heatsink with lower thermal resistance for MOSFETs Q201 and Q202 is used, fanless operation may be achieved. For example, the same shape of the heatsink used for D1, Q1, Q2, D3, Q101, and Q102 could be used for fanless operation. A picture of this application is shown in *Figure 18*.

Figure 18. Fanless board

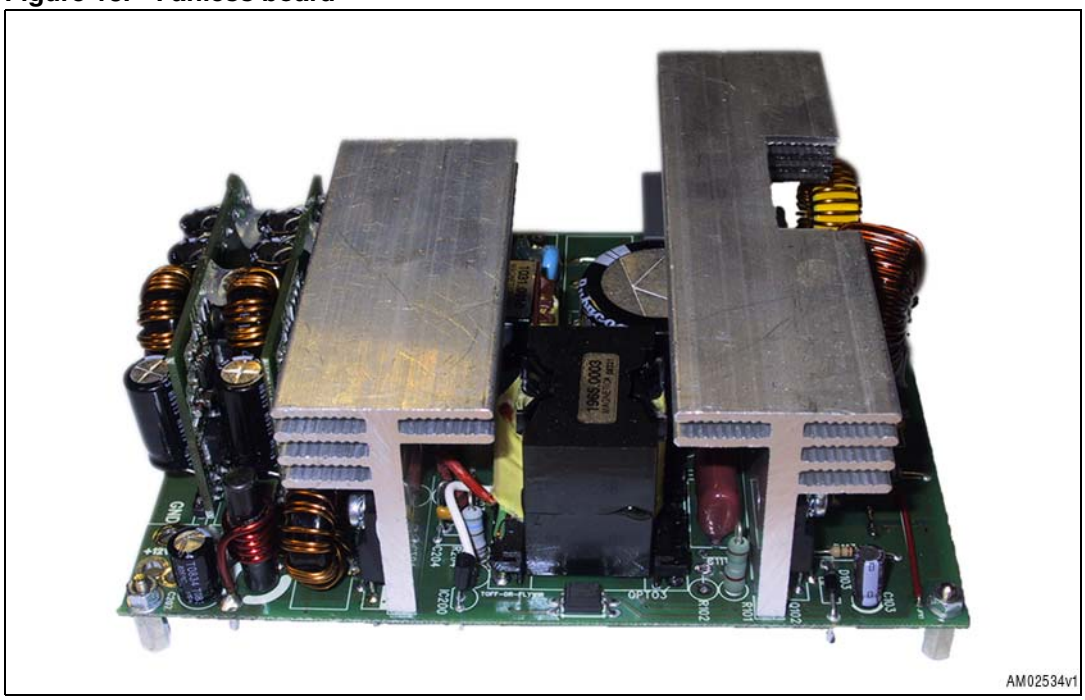

4.3 Harmonic content measurement

The front-end PFC stage provides the reduction of the mains harmonic, allowing European EN61000-3-2 and Japanese JEITA–MITI standards for class D equipment to be met. *Figure 19* shows the harmonic contents of the mains current at full load.

A measurement has also been taken with a 75 W input power which is the lowest limit for using harmonic reduction techniques.

Figure 19. EN61000-3-2 and JEITA-MITI measurements @ full load

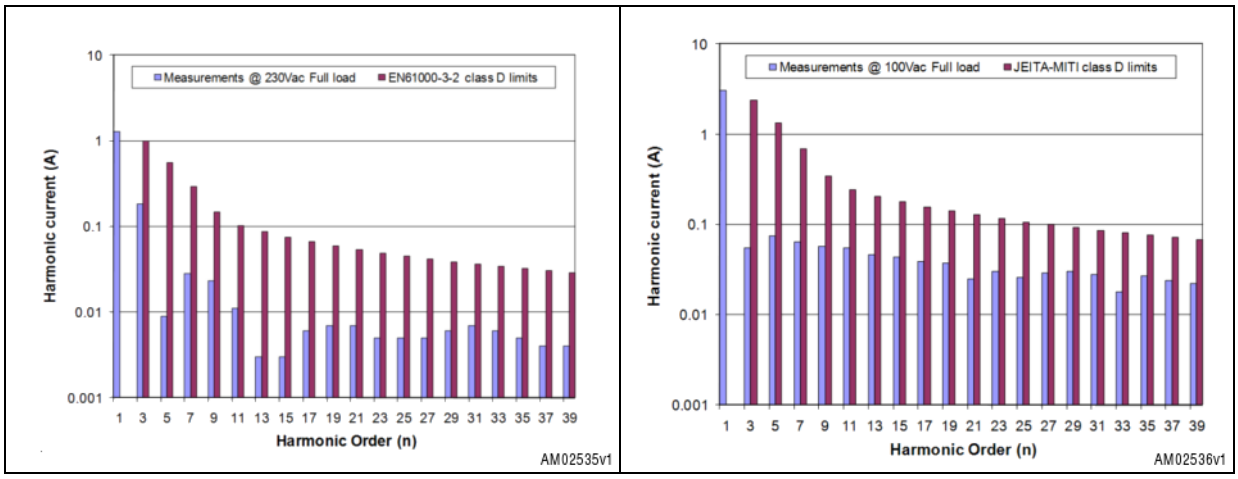

Figure 20. EN61000-3-2 and JEITA-MITI measurements @ 75 W in

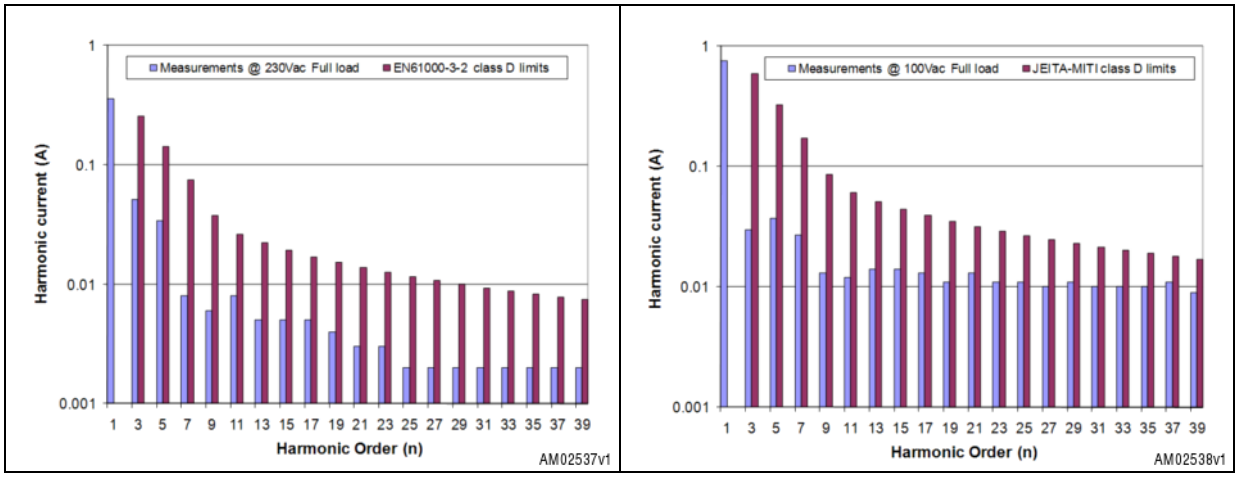

To evaluate the performance of the PFC stage the PF and THD vs. input voltage graphs are also shown, in *Figure 21* and *Figure 22*, at full load and 75 W input power load conditions. *Table 9* shows the PF values at the three different load amounts defined in the 80 PLUS® and climate savers computing requirements.

Figure 21. PF vs. input voltage

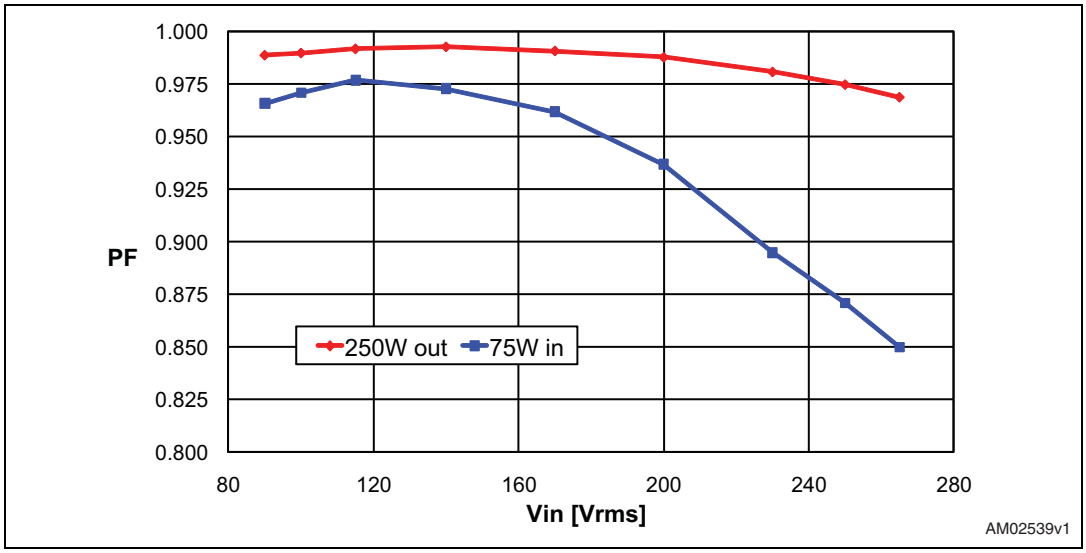

Figure 22. THD vs. input voltage

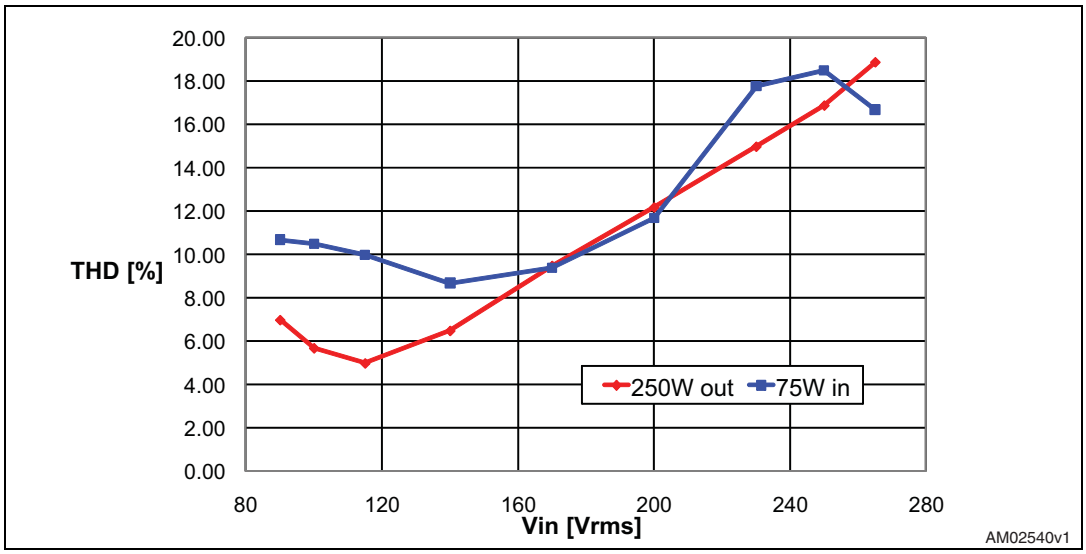

Table 9. PF vs. load

Load	115 Vac	230 Vac
20 %	0.972	0.857
50 %	0.984	0.954
100 %	0.992	0.981

4.4 Single output configuration

The power supply overall efficiency is given by the product of the efficiency of each stage. It is interesting to take a look at the efficiency of the single +12 V output system. Such power supply can be obtained from the complete system just removing the two daughter boards that realize the DC-DC post regulation. The single output system can manage the same power of the multi-output board, hence it is capable of sourcing about 21 A from the +12 V output.

The system is now made up of input filter, PFC stage, AHB stage and Stand-by stage. The latter is left unloaded for the following efficiency measurements:

Table 10. Single output efficiency @ 115 Vac

Load [%]	Iout [A]	Vout [V]	Pout [W]	Pin [W]	Eff [%]
10 %	2.085	12.06	25.145	29.79	84.41%
20 %	4.17	12.06	50.290	56.27	89.37%
25 %	5.205	12.06	62.772	69.63	90.15%
50 %	10.421	12.05	125.573	137.4	91.39%
75 %	15.623	12.04	188.101	207.4	90.69%
100 %	20.829	12.03	250.573	279.8	89.55%

Table 11. Single output efficiency @ 230 Vac

Load [%]	Iout [A]	Vout [V]	Pout [W]	Pin [W]	Eff [%]
10 %	2.084	12.06	25.133	31.02	81.02%
20 %	4.169	12.06	50.278	56.65	88.75%
25 %	5.204	12.06	62.760	69.39	90.45%
50 %	10.421	12.05	125.573	135.3	92.81%
75 %	15.622	12.04	188.089	203.9	92.25%
100 %	20.827	12.03	250.549	274.2	91.37%

It is interesting to compare the result obtained with the single output configuration with the 80 PLUS® levels (see *Table 3* and *Table 4*). The comparison is graphically shown in *Figure 23* and *Figure 24*.

Figure 23. Single output efficiency @ 115 Vac

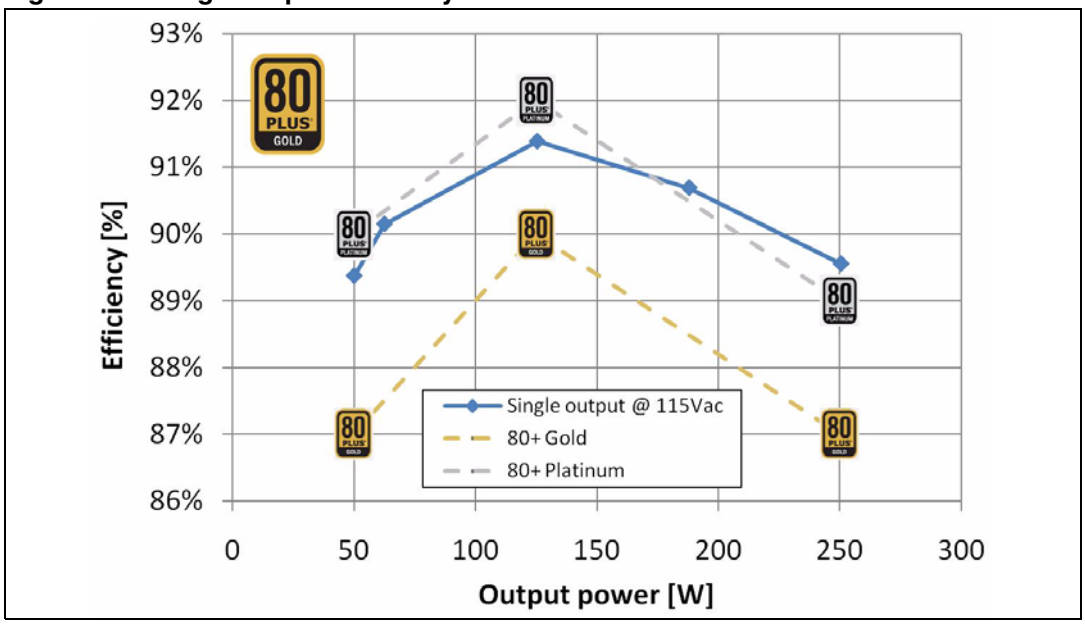

Figure 24. Single output efficiency @ 230 Vac

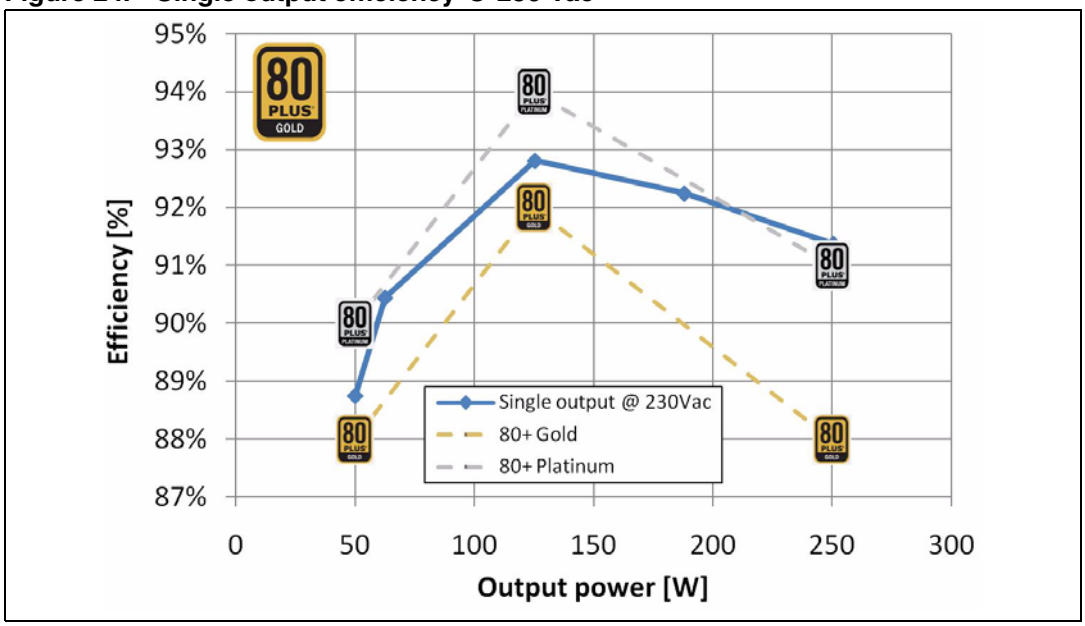

From the pictures it is immediately clear that the single output configuration is over performing the 80 PLUS® GOLD efficiency targets and that it is close to the PLATINUM ones.

Such performance has been achieved mainly thanks to the AHB stage, which is very efficient. In *Table 12* and *Figure 25* efficiency data for the AHB stage only are given. These measurements were taken by supplying the stage with a 400Vdc input voltage and with the auxiliary operating without load.

Table 12. AHB efficiency with 400 Vdc input

Load [%]	Iout [A]	Vout [V]	Pout [W]	Pin [W]	Eff [%]
10 %	2.078	12.06	25.061	28.61	87.59%
20 %	4.163	12.06	50.206	53.79	93.34%
25 %	5.213	12.06	62.869	66.6	94.40%
50 %	10.415	12.05	125.501	131.3	95.58%
75 %	15.616	12.04	188.017	197.9	95.01%
100 %	20.823	12.03	250.501	266.3	94.07%

Figure 25. AHB stage only efficiency (Vin = 400 Vdc)

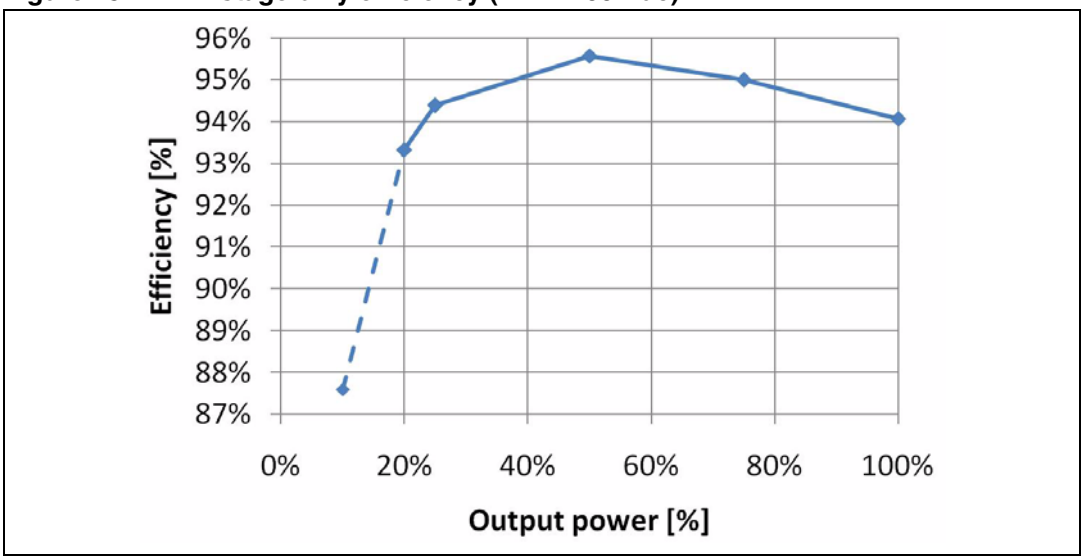

When looking at these efficiency results we have also to keep in mind that the AHB stage is a cost effective solution, thanks to a low count of components needed, no need of a controller IC for the synchronous rectification and a small output choke.

5 Conducted noise measurements (pre-compliance test)

Figure 26, *27*, *28*, and *29* show the conducted noise measurements with peak and average detection taken at both nominal voltages. All the measurements are performed with full load output and only consider the worst phase. The average measurements show good margins with respect to the mask limit (which is the EN55022 CLASS B).

Figure 26. CE peak measurement@115 Vac and full load

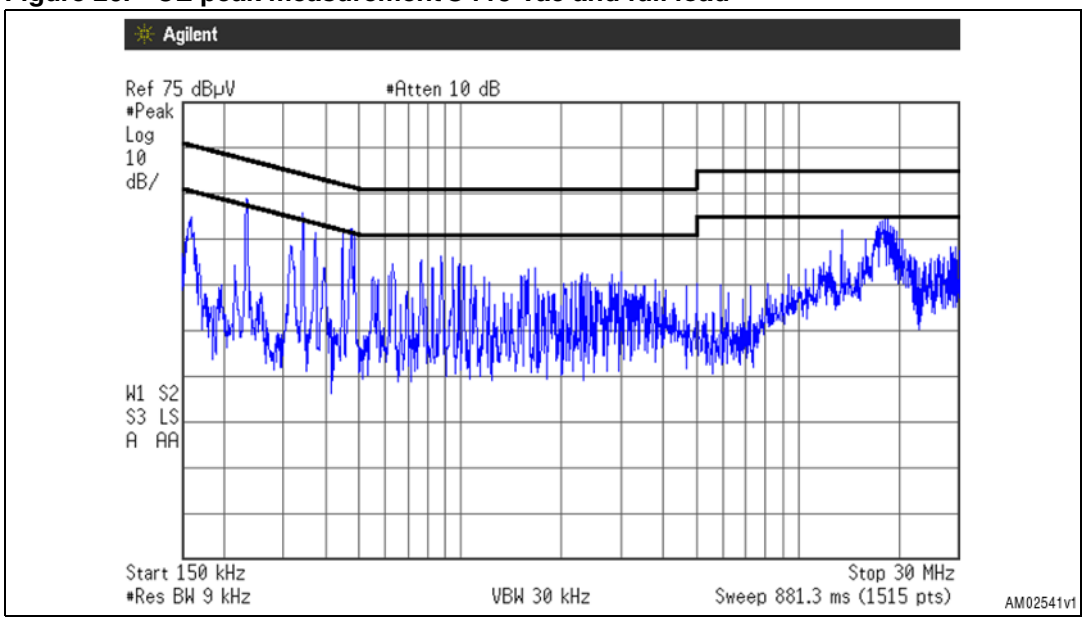

Figure 27. CE peak measurement @ 230 Vac and full load

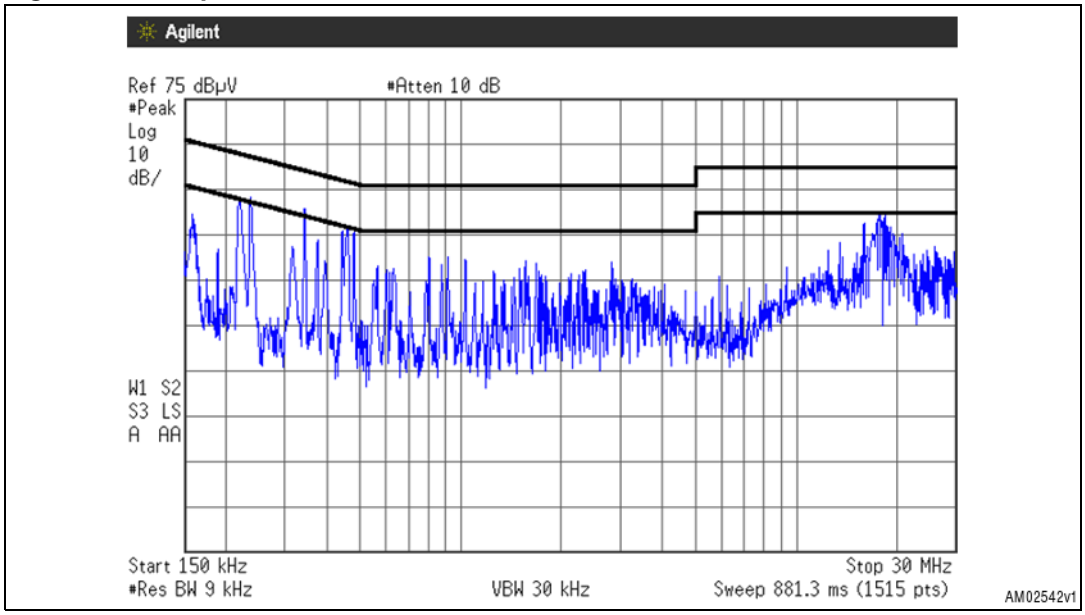

Figure 28. CE average measurement@115 Vac and full load

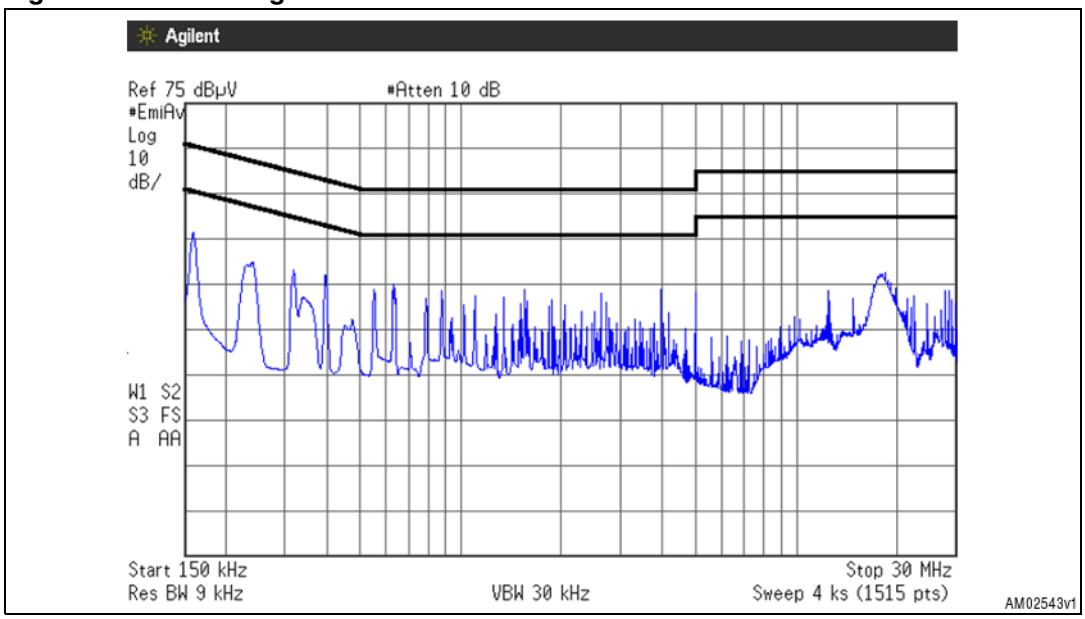

Figure 29. CE average measurement@230 Vac and full load

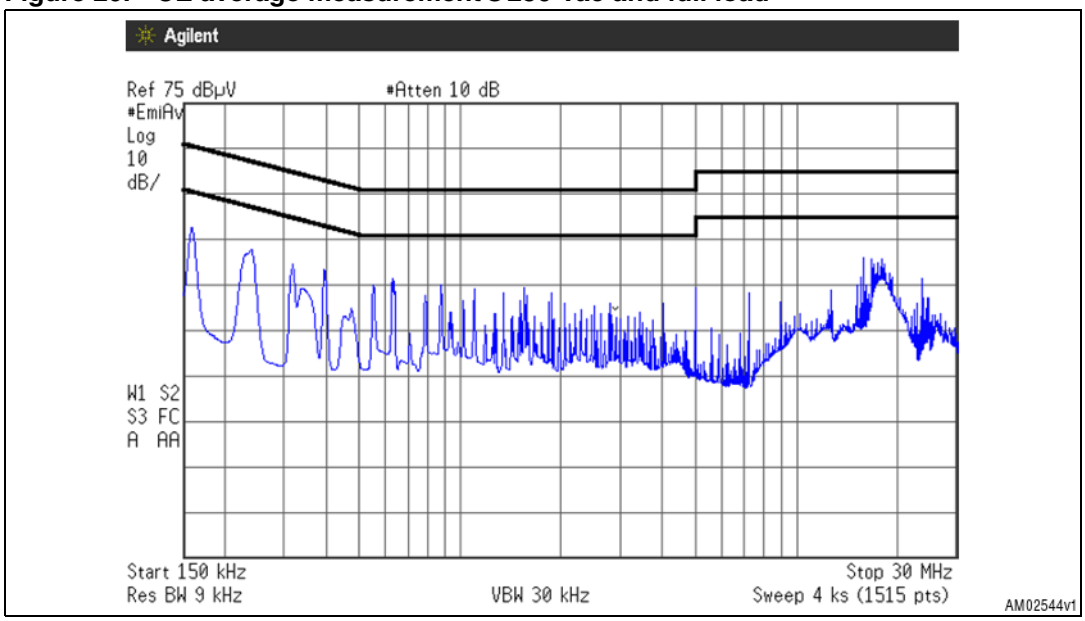

6 Parts list

Table 13. EVL250W-ATX80PL bill of materials

Ref	Value	Description	Manufacturer
C1	220 µF	Electrolytic capacitor VXG – 450 V	Rubycon
C2	100 nF	Polypropylene capacitor 450 V	
C3	1.0 µF	Polypropylene capacitor 450 V – ECWF2W105JA	Panasonic
C4	1 µF	SMD ceramic capacitor X7R – 16 V	AVX
C5	22 µF	Electrolytic capacitor 25 V – 105 °C	
C6	0.1 µF	SMD ceramic capacitor X7R – 25 V	AVX
C7	3.3 nF	SMD ceramic capacitor X7R – 50 V	AVX
C8	2.2 nF	SMD ceramic capacitor X7R – 50 V	AVX
C9	560 pF	SMD ceramic capacitor NP0 – 50 V	AVX
C10	330 pF	SMD ceramic capacitor NP0 – 50 V	AVX
C11	470 pF	SMD ceramic capacitor X7R – 50 V	AVX
C12	220 nF	SMD ceramic capacitor X7R – 25 V	AVX
C13	1 nF	SMD ceramic capacitor X7R – 50 V	AVX
C14	33 nF	SMD ceramic capacitor X7R – 25 V	AVX
C15	10 nF	SMD ceramic capacitor X7R – 25 V	AVX
C101	1.0 µF	Polypropylene capacitor 450 V – ECWF2W105JA	Panasonic
C102	0.1 µF	SMD ceramic capacitor X7R – 25 V	AVX
C103	22 µF	Electrolytic capacitor 25 V – 105 °C	
C104	10 nF	SMD ceramic capacitor X7R – 25 V	AVX
C105	0.1 µF	SMD ceramic capacitor X7R – 25 V	AVX
C106	220 pF	SMD ceramic capacitor NP0 – 50 V 1 %	AVX
C107	10 nF	SMD ceramic capacitor X7R – 25 V	AVX
C108	470 nF	SMD ceramic capacitor X7R – 16 V	AVX
C109	0.1 µF	SMD ceramic capacitor X7R – 25 V	AVX
C110	100 pF	SMD ceramic capacitor NP0 – 50 V	AVX
C112	10 nF	SMD ceramic capacitor X7R – 50 V	AVX
C201	1500 µF	Electrolytic capacitor HM – 16 V	Nichicon
C202	1500 µF	Electrolytic capacitor HM – 16 V	Nichicon
C203	4.7 nF	SMD ceramic capacitor X7R – 50 V	AVX
C204	3.3 nF	SMD ceramic capacitor X7R – 100 V	AVX
C205	220 nF	SMD ceramic capacitor X7R – 25 V	AVX
C206	0.1 µF	SMD ceramic capacitor X7R – 25 V	AVX

Table 13. EVL250W-ATX80PL bill of materials (continued)

Ref	Value	Description	Manufacturer
C207	470 µF	Electrolytic capacitor ZLH – 16 V	Rubycon
C208	0.1 µF	SMD ceramic capacitor X7R – 25 V	AVX
C209	2.2 µF	SMD ceramic capacitor X7R – 25 V	AVX
C210	2.2 µF	SMD ceramic capacitor X7R – 25 V	AVX
C301	1500 µF	Electrolytic capacitor HM – 16 V	Nichicon
C302	1500 µF	Electrolytic capacitor HM – 16 V	Nichicon
C303	1500 µF	Electrolytic capacitor HM – 16 V	Nichicon
C304	1.2 nF	SMD ceramic capacitor X7R – 50 V	AVX
C305	0.1 µF	SMD ceramic capacitor X7R – 25 V	AVX
C306	4.7 µF	SMD ceramic capacitor X7R – 16 V	AVX
C307	0.1 µF	SMD ceramic capacitor X7R – 25 V	AVX
C308	1 nF	SMD ceramic capacitor X7R – 50 V	AVX
C309	10 nF	SMD ceramic capacitor X7R – 25 V	AVX
C310	2.2 nF	SMD ceramic capacitor X7R – 50 V	AVX
C311	100 µF	SMD ceramic cap 6.3 V – GRM32EF50J107ZE20K	Murata
C312	100 µF	SMD ceramic cap 6.3 V – GRM32EF50J107ZE20K	Murata
C313	10 µF	SMD ceramic capacitor X7R – 6.3 V	AVX
C501	1500 µF	Electrolytic capacitor HM – 16 V	Nichicon
C502	1500 µF	Electrolytic capacitor HM – 16 V	Nichicon
C503	1500 µF	Electrolytic capacitor HM – 16 V	Nichicon
C504	1.2 nF	SMD ceramic capacitor X7R – 50 V	AVX
C505	4.7 µF	SMD ceramic capacitor X7R – 16 V	AVX
C506	0.1 µF	SMD ceramic capacitor X7R – 25 V	AVX
C507	0.1 µF	SMD ceramic capacitor X7R – 25 V	AVX
C508	10 nF	SMD ceramic capacitor X7R – 25 V	AVX
C509	1 nF	SMD ceramic capacitor X7R – 50 V	AVX
C510	2.2 nF	SMD ceramic capacitor X7R – 50 V	AVX
C511	100 µF	SMD ceramic cap 6.3 V – GRM32EF50J107ZE20K	Murata
C512	100 µF	SMD ceramic cap 6.3 V – GRM32EF50J107ZE20K	Murata
C513	10 µF	SMD ceramic capacitor X7R – 10 V	AVX
C602	470 pF	Ceramic capacitor – 1 kV	
C603	1500 µF	Electrolytic capacitor HM – 16 V	Nichicon
C604	470 µF	Electrolytic capacitor ZLH – 16 V	Rubycon
C605	10 µF	Electrolytic capacitor 50V – 105 °C	
C606	47 µF	Electrolytic capacitor 35V – 105 °C	

Table 13. EVL250W-ATX80PL bill of materials (continued)

Ref	Value	Description	Manufacturer
C607	0.1 µF	SMD ceramic capacitor X7R – 25 V	AVX
C608	10 nF	SMD ceramic capacitor X7R – 25 V	AVX
C609	0.1 µF	SMD ceramic capacitor X7R – 25 V	AVX
C611	220 nF	SMD ceramic capacitor X7R – 25 V	AVX
C612	47 nF	SMD ceramic capacitor X7R – 25 V	AVX
C613	10 nF	SMD ceramic capacitor X7R – 25 V	AVX
C614	0.1 µF	SMD ceramic capacitor X7R – 25 V	AVX
C615	10 nF	SMD ceramic capacitor X7R – 25 V	AVX
CN1	AC INLET	3.96 mm pitch KK series	Molex
CX1	470 nF	Polypropylene X2 capacitor R46 – 275 Vac	Arcotronics
CX3	680 nF	Polypropylene X2 capacitor R46 – 275 Vac	Arcotronics
CY1	2N2	Ceramic Y1 capacitor – DE1E3KX222M	Murata
CY2	2N2	Ceramic Y1 capacitor – DE1E3KX222M	Murata
CY3	4N7	Ceramic Y1 capacitor – DE1E3KX472M	Murata
D1	D15XB60	15A/600V bridge rectifier	Shindengen
D2	1N5406	3A/600V rectifier	
D3	STPSC1006D	10A/600V silicon carbide Schottky rectifier	STMicroelectronics
D4	1N4148WS	Fast switching diode	
D5	1N4148WS	Fast switching diode	
D6	1N4148	Fast switching diode	
D101	LL4148	Fast switching diode	
D102	LL4148	Fast switching diode	
D103	STTH1L06	1A/600V ultrafast high voltage rectifier	STMicroelectronics
D203	LL4148	Fast switching diode	
D204	LL4148	Fast switching diode	
D301	TMMBAT43	Small signal Schottky diode	STMicroelectronics
D501	TMMBAT43	Small signal Schottky diode	STMicroelectronics
D601	STTH102A	1A/200V high efficiency ultrafast diode	STMicroelectronics
D602	BAV103	Switching diode	
D603	BAV103	Switching diode	
D604	STTH108A	1A/800V high voltage ultrafast rectifier	STMicroelectronics
D605	STPS5L60	5A/60V power Schottky diode	STMicroelectronics
D606	BAT48	Small signal Schottky diode	STMicroelectronics
D607	LL4148	Fast switching diode	
D608	LL4148	Fast switching diode	

Table 13. EVL250W-ATX80PL bill of materials (continued)

Ref	Value	Description	Manufacturer
D609	LL4148	Fast switching diode	
F1	FUSE - 10A	Fuse T10A – time delay	
IC1	L6563S	Enhanced transition-mode PFC controller	STMicroelectronics
IC2	L6591	PWM controller for ZVS half bridge	STMicroelectronics
IC3	VIPER27HN	Offline high voltage converters	STMicroelectronics
IC200	TL431AIZ	Programmable voltage reference	STMicroelectronics
IC300	L6727	Single phase PWM controller	STMicroelectronics
IC500	L6727	Single phase PWM controller	STMicroelectronics
IC600	TS431AIZ	Low voltage adjustable shunt reference	STMicroelectronics
L1	2x4 mH	Common mode choke 1606.0010	Magnetica
L2	2xJUMPER		
L3	60 µH	Differential mode choke 1119.0013	Magnetica
L4	870 µH	PFC choke	
L5	0.75 µH	AHB post filter inductor 1019.0016	Magnetica
L201	3.7 µH	AHB output choke 2029.0002	Magnetica
L301	3.7 µH	DC-DC choke 2029.0001	Magnetica
L501	3.7 µH	DC-DC choke 2029.0001	Magnetica
L601	2.7 µH	AUX stage post filter inductor 1048.0010	Magnetica
NTR1	2R5	NTC inrush current limiter B57237S0259M000	EPCOS
OPTO1	PC817A	Optocoupler	SHARP
OPTO2	PC817A	Optocoupler	SHARP
OPTO3	PC817A	Optocoupler	SHARP
Q1	STF12NM50N	500 V MDmesh II Power MOSFET	STMicroelectronics
Q2	STF12NM50N	500 V MDmesh II Power MOSFET	STMicroelectronics
Q3	BC857C	PNP small signal BJT	
Q101	STF21NM50N	500 V MDmesh™ II Power MOSFET	STMicroelectronics
Q102	STF21NM50N	500 V MDmesh™ II Power MOSFET	STMicroelectronics
Q201	STP120NF04	40 V STripFET™ II Power MOSFET	STMicroelectronics
Q202	STP75NF75FP	75 V STripFET™ II Power MOSFET	STMicroelectronics
Q301	STD95N2LH5	25 V STripFET™ V Power MOSFET	STMicroelectronics
Q302	STD95N2LH5	25 V STripFET™ V Power MOSFET	STMicroelectronics
Q303	STD95N2LH5	25 V STripFET™ V Power MOSFET	STMicroelectronics
Q501	STD95N2LH5	25 V STripFET™ V Power MOSFET	STMicroelectronics
Q502	STD95N2LH5	25V STripFET™ V Power MOSFET	STMicroelectronics
Q503	STD95N2LH5	25 V STripFET™ V Power MOSFET	STMicroelectronics

Table 13. EVL250W-ATX80PL bill of materials (continued)

Ref	Value	Description	Manufacturer
Q601	MMBT3904	NPN small signal BJT	
Q603	MMBT3904	NPN small signal BJT	
Q604	MMBT3904	NPN small signal BJT	
Q605	MMBT3906	PNP small signal BJT	
R1	0R33	Metal film resistor – 5 % – 250 ppm/°C – 2 W	
R2	0R33	Metal film resistor – 5 % – 250 ppm/°C – 2 W	
R3	6.8 R	SMD film resistor – 5 % – 250 ppm/°C – 0805	
R4	6.8 R	SMD film resistor – 5 % – 250 ppm/°C – 0805	
R5	47 K	SMD film resistor – 5 % – 250 ppm/°C – 0603	
R6	47 K	SMD film resistor – 5 % – 250 ppm/°C – 0603	
R7	10 R	SMD film resistor – 5 % – 250 ppm/°C – 0603	
R8	2.2 Meg	SMD film resistor – 1 % – 100 ppm/°C – 1206	
R9	2.2 Meg	SMD film resistor – 1 % – 100 ppm/°C – 1206	
R10	2.2 Meg	SMD film resistor – 1 % – 100 ppm/°C – 1206	
R11	51 K	SMD film resistor – 1 % – 100 ppm/°C – 0603	
R12	1 Meg	SMD film resistor – 1 % – 100 ppm/°C – 0603	
R13	2.4 K	Metal film resistor – 1% – 100 ppm/°C – 0.16 W	
R14	6.8 K	SMD film resistor – 1 % – 100 ppm/°C – 0603	
R15	2.4 K	SMD film resistor – 1 % – 100 ppm/°C – 0603	
R16	220 K	SMD film resistor – 1 % – 100 ppm/°C – 0603	
R17	1.5 Meg	SMD film resistor – 1 % – 100 ppm/°C – 1206	
R18	1.5 Meg	SMD film resistor – 1 % – 100 ppm/°C – 1206	
R19	1.5 Meg	SMD film resistor – 1 % – 100 ppm/°C – 1206	
R20	1.6 Meg	SMD film resistor – 1 % – 100 ppm/°C – 1206	
R21	1.6 Meg	SMD film resistor – 1% – 100 ppm/°C – 1206	
R22	1.6 Meg	SMD film resistor – 1 % – 100 ppm/°C – 1206	
R23	470 R	SMD film resistor – 5 % – 250 ppm/°C – 0603	
R24	56 K	SMD film resistor – 1 % – 100 ppm/°C – 0603	
R25	56 K	SMD film resistor – 1 % – 100 ppm/°C – 0603	
R26	24 K	SMD film resistor – 1 % – 100 ppm/°C – 0603	
R28	56 K	SMD film resistor – 1 % – 100 ppm/°C – 0603	
R29	3.3 K	SMD film resistor – 1 % – 100 ppm/°C – 0603	
R30	2.7 K	SMD film resistor – 1 % – 100 ppm/°C – 0603	
R31	3.3 R	SMD film resistor – 5 % – 250 ppm/°C – 0805	
R32	3.3 R	SMD film resistor – 5 % – 250 ppm/°C – 0805	

Table 13. EVL250W-ATX80PL bill of materials (continued)

Ref	Value	Description	Manufacturer
R101	0.18 R	Metal film resistor – 5 % – 250 ppm/°C – 2 W	
R103	10 R	SMD film resistor – 5 % – 250 ppm/°C – 0603	
R104	4.7 K	SMD film resistor – 5 % – 250 ppm/°C – 0603	
R105	100 K	SMD film resistor – 5 % – 250 ppm/°C – 0603	
R107	20 K	SMD film resistor – 1 % – 100 ppm/°C – 0603	
R108	36 K	SMD film resistor – 1 % – 100 ppm/°C – 0603	
R109	20 R	SMD film resistor – 5 % – 250 ppm/°C – 0805	
R110	47 K	SMD film resistor – 5 % – 250 ppm/°C – 0603	
R111	20 R	SMD film resistor – 5 % – 250 ppm/°C – 0805	
R112	47 K	SMD film resistor – 5 % – 250 ppm/°C – 0603	
R113	1 K	Metal film resistor – 1 % – 100 ppm/°C – 0.16 W	
R114	2.2 R	SMD film resistor – 5 % – 250 ppm/°C – 0603	
R115	2.2 R	SMD film resistor – 5 % – 250 ppm/°C – 0603	
R116	100 K	SMD film resistor – 5 % – 250 ppm/°C – 0603	
R201	2.2 R	SMD film resistor – 5 % – 250 ppm/°C – 0805	
R202	15 K	SMD film resistor – 5 % – 250 ppm/°C – 0805	
R203	13 R	Metal film resistor – 5 % – 250 ppm/°C – 2 W	
R204	5.6 R	Metal film resistor – 5 % – 250 ppm/°C – 2 W	
R206	2.2 R	SMD film resistor – 5 % – 250 ppm/°C – 0805	
R208	15 K	SMD film resistor – 5 % – 250 ppm/°C – 0805	
R209	1 K	SMD film resistor – 1 % – 100 ppm/°C – 0603	
R210	2.2 K	SMD film resistor – 1 % – 100 ppm/°C – 0603	
R211	20 K	SMD film resistor – 1 % – 100 ppm/°C – 0603	
R212	10 K	SMD film resistor – 1 % – 100 ppm/°C – 0603	
R213	5.6 K	SMD film resistor – 1 % – 100 ppm/°C – 0603	
R214	75 K	SMD film resistor – 1 % – 100 ppm/°C – 0603	
R215	6.8 K	SMD film resistor – 5 % – 250 ppm/°C – SOD-80	
R216	10 K	SMD film resistor – 5 % – 250 ppm/°C – SOD-80	
R301	22 R	SMD film resistor – 5 % – 250 ppm/°C – 0805	
R302	22 R	SMD film resistor – 5 % – 250 ppm/°C – 0805	
R303	22 R	SMD film resistor – 5 % – 250 ppm/°C – 0805	
R304	22 R	SMD film resistor – 5 % – 250 ppm/°C – 0805	
R305	47 K	SMD film resistor – 5 % – 250 ppm/°C – 0603	
R306	47 K	SMD film resistor – 5 % – 250 ppm/°C – 0603	
R307	10 R	SMD film resistor – 5 % – 250 ppm/°C – 0603	

Table 13. EVL250W-ATX80PL bill of materials (continued)

Ref	Value	Description	Manufacturer
R308	10 R	SMD film resistor – 5 % – 250 ppm/°C – 0603	
R309	7.5 K	SMD film resistor – 1 % – 100 ppm/°C – 0603	
R310	6.34 K	SMD film resistor – 1 % – 100 ppm/°C – 0603	
R311	10 K	SMD film resistor – 1 % – 100 ppm/°C – 0603	
R312	2 K	SMD film resistor – 1 % – 100 ppm/°C – 0603	
R313	0 R	SMD film resistor – 0603	
R314	0 R	SMD film resistor – 0805	
R501	22 R	SMD film resistor – 5 % – 250 ppm/°C – 0805	
R502	22 R	SMD film resistor – 5 % – 250 ppm/°C – 0805	
R503	22 R	SMD film resistor – 5 % – 250 ppm/°C – 0805	
R504	22 R	SMD film resistor – 5 % – 250 ppm/°C – 0805	
R505	47 K	SMD film resistor – 5 % – 250 ppm/°C – 0603	
R506	47 K	SMD film resistor – 5 % – 250 ppm/°C – 0603	
R507	10 R	SMD film resistor – 5 % – 250 ppm/°C – 0603	
R508	10 R	SMD film resistor – 5 % – 250 ppm/°C – 0603	
R509	7.5 K	SMD film resistor – 1 % – 100 ppm/°C – 0603	
R510	10 K	SMD film resistor – 1 % – 100 ppm/°C – 0603	
R511	12.7 K	SMD film resistor – 1 % – 100 ppm/°C – 0603	
R512	2.4 K	SMD film resistor – 1 % – 100 ppm/°C – 0603	
R513	0 R	SMD film resistor – 0603	
R514	0 R	SMD film resistor – 0805	
R601	470 K	SMD film resistor – 5 % – 250 ppm/°C – 1206	
R602	4.7 R	SMD film resistor – 5 % – 250 ppm/°C – 0805	
R603	15 R	SMD film resistor – 5 % – 250 ppm/°C – 0805	
R604	56 K	SMD film resistor – 1 % – 100 ppm/°C – 0603	
R605	13 K	SMD film resistor – 1 % – 100 ppm/°C – 0603	
R606	10 R	SMD film resistor – 5 % – 250 ppm/°C – 0805	
R607	150 K	SMD film resistor – 1 % – 100 ppm/°C – 0603	
R610	1 K	SMD film resistor – 1 % – 100 ppm/°C – 0603	
R611	15 K	SMD film resistor – 5 % – 250 ppm/°C – 0603	
R612	10 K	SMD film resistor – 1 % – 100 ppm/°C – 0603	
R613	4.7 K	SMD film resistor – 1 % – 100 ppm/°C – 0603	
R614	47 K	SMD film resistor – 1 % – 100 ppm/°C – 0603	
R615	1.6 K	SMD film resistor – 1 % – 100 ppm/°C – 0603	
R616	1 K	SMD film resistor – 1 % – 100 ppm/°C – 0603	

Table 13. EVL250W-ATX80PL bill of materials (continued)

Ref	Value	Description	Manufacturer
R617	1 K	SMD film resistor – 1 % – 100 ppm/°C – 0603	
R618	1.5 K	SMD film resistor – 1 % – 100 ppm/°C – 0603	
R619	10 K	SMD film resistor – 1 % – 100 ppm/°C – 0603	
R620	470 R	SMD film resistor – 1 % – 100 ppm/°C – 0603	
R621	1 K	SMD film resistor – 1 % – 100 ppm/°C – 0603	
R622	470 R	SMD film resistor – 1 % – 100 ppm/°C – 0603	
R623	100 R	SMD film resistor – 1 % – 100 ppm/°C – 0603	
R624	0 R	SMD film resistor – 0603	
R626	1 K	SMD film resistor – 5 % – 250 ppm/°C – 0603	
R627	1.5 K	SMD film resistor – 5 % – 250 ppm/°C – 0805	
R628	200 R	SMD film resistor – 5 % – 250 ppm/°C – 0805	
RX1	680 K	SMD film resistor – 5 % – 250 ppm/°C – 1206	
RX2	680 K	SMD film resistor – 5 % – 250 ppm/°C – 1206	
T1	Transformer	AHB transformer 1965.0003	Magnetica
T2	Transformer	AUX transformer 1031.0010	Magnetica
VDR1	Varistor	300 Vac – S14K300 – B72214S0301K101	EPCOS
ZD601	BZV55-B18	SMD Zener diode 18 V – 2 %	
ZD603	BZX55B5V1	Zener diode 5V1 – 2 %	
ZD604	BZX55-B13	Zener diode 13 V – 2 %	
ZD605	BZX55B2V7	Zener diode 2V7 – 2 %	
ZD606	BZV55-B36	SMD Zener diode 36 V – 2 %	

7 PFC coil specification

- Application type: Consumer, IT
- Transformer type: Toroidal
- Coil former: none
- Max. temp. rise: 45 °C
- Max. operating ambient temp.: 60 °C

7.1 Electrical characteristics

- Converter topology: Boost, Fixed Off Time
- Core type: Dong Bu H106-093A
- Min. operating frequency: 20 kHz
- Primary inductance: 870 µH ±15 % @1 kHz - 0.25 V
- Max peak current: 5.3 A_{pk}
- Max RMS current: 3.37 A_{RMS}

Figure 30. Electrical diagram

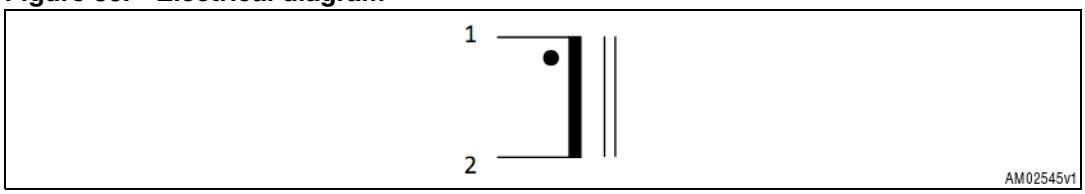

Table 14. Winding characteristics

Pins	RMS current	Nr. of turns	Wire type
1 – 2	3.37 A_{RMS}	100.5	Ø 1.0mm – G2

Figure 31. Mechanical drawing (unit: mm)

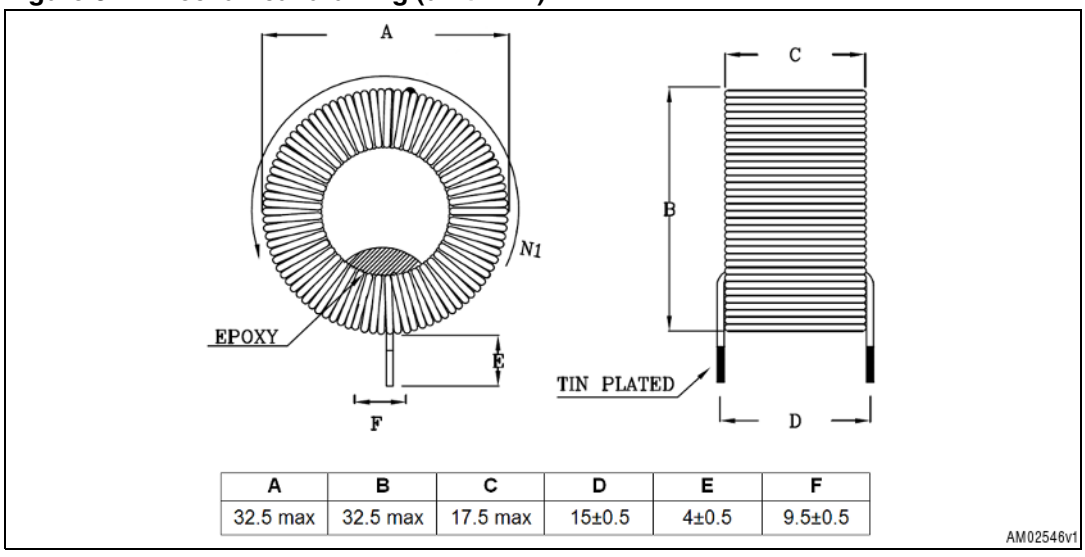

A	B	C	D	E	F
32.5 max	32.5 max	17.5 max	15±0.5	4±0.5	9.5±0.5

8 AHB transformer specification

- Application type: Consumer, IT
- Transformer type: Open
- Coil former: vertical type, 6+6 pins
- Max. temp. rise: 45 °C
- Max. operating ambient temp.: 60 °C
- Mains insulation: Compliance with EN60950

8.1 Electrical characteristics

- Converter topology: Asymmetrical half bridge
- Core Type: PQ3230 – PC44 or equivalent
- Operating frequency: 80 kHz
- Primary inductance: 500 µH ±10 % @1 kHz – 0.25 V [(a)]
- Air gap: 0.3 mm on central leg
- Leakage inductance: 12 µH typ. @100 kHz – 0.25 V [(b)]
- Primary capacitance: 6 pF typ.[(c)]
- Max. peak primary current: 3.85 A_{pk}
- RMS primary current: 2 A_{RMS}

Figure 32. Electrical diagram

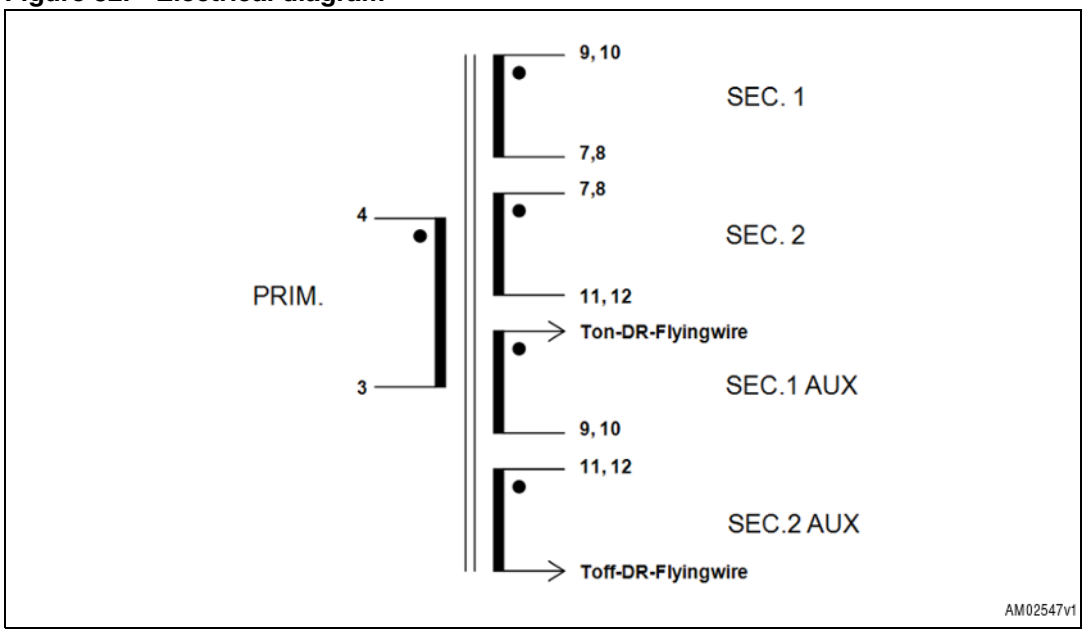

a. Measured between pins 2-4

b. Measured between pins 2-4 with secondaries and auxiliary windings shorted

c. Calculated considering primary inductance and resonance frequency

Table 15. Winding characteristics

Pins	Winding	Current	Nr. of turns	Wire type
4 – 3	Primary	2.1 A_{RMS}	34	TIW – 2 x Ø0.4 mm 4 layers
9,10 – 7,8	Secondary 1	15 A_{RMS}	2	Copper foil 0.2 x 17 mm
7,8 – 11,12	Secondary 2	19.7 A_{RMS}	3	Copper foil 0.2 x 17 mm
TonFW – 9,10	Sec.1 AUX	0.1 A_{RMS}	1	Ø 0.15 mm – G2
11,12 – ToffFW	Sec.2 AUX	0.1 A_{RMS}	1	Ø 0.15 mm – G2

Note: Cover wire ends with silicon/teflon tube:
Use red tube for Ton-DR-Flyingwire
Use white tube for Toff-DR-Flyingwire

Figure 33. Windings position

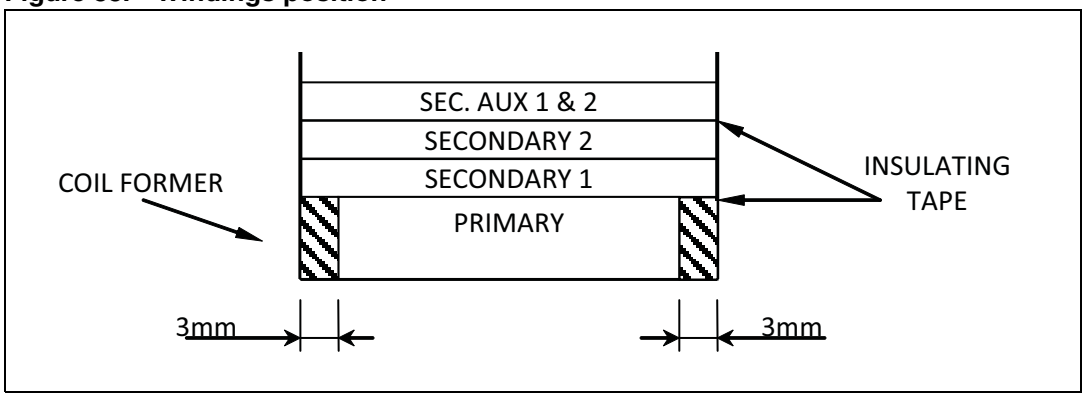

8.2 Mechanical aspect and pin numbering

- Maximum height from PCB: 33 mm
- Coil former type: vertical, 6+6 pins
- Pin distance: 5.08 mm
- Row distance: 30.5 mm
- Pin removed: # 5
- Manufacturer: Magnetica
- P/N: 1754.0004

Figure 34. Bottom view

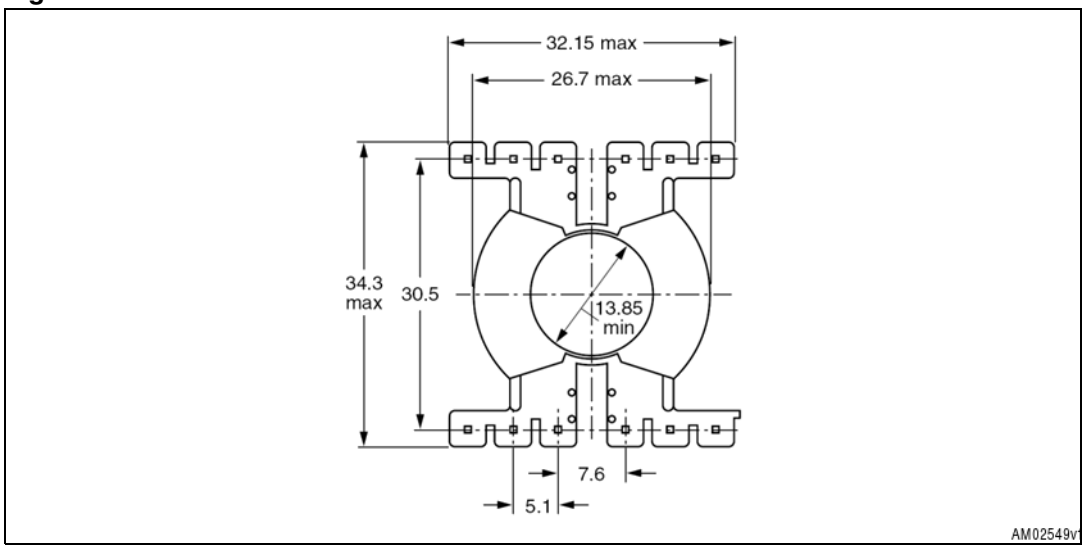

9 AUX flyback transformer specification

- Application type: Consumer, IT
- Transformer type: Open
- Coil former: vertical type, 5+5 pins
- Max. temp. rise: 45 °C
- Max. operating ambient temp.: 60 °C
- Mains insulation: Compliance with EN60950

9.1 Electrical characteristics

- Converter topology: Flyback, CCM/DCM mode
- Core Type: E20/10/6 (EF20) - N87 or equivalent
- Operating frequency: 115 kHz
- Primary inductance: 1.7 mH 10 % @1 kHz - 0.25 V [(d)]
- Air gap: 1.24 mm on central leg
- Leakage inductance: 50 µH max. @100 kHz - 0.25 V [(e)]
- Max. peak primary current: 0.74 A_{pk}
- RMS primary current: 0.17 A_{RMS}

Figure 35. Electrical diagram

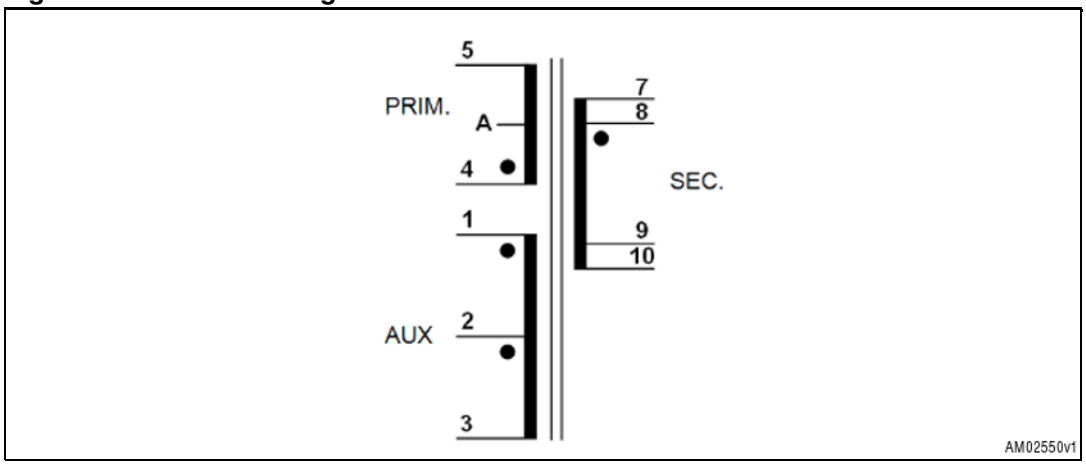

d. Measured between pins 1-3

e. Measured between pins 1-3 with secondaries and auxiliary windings shorted

Table 16. Winding characteristics

Pins	Winding	Current	Nr. of turns	Wire type
4 – A	Primary – A	0.17 A_{RMS}	90	G2 – Ø 0.2 mm 2 layers
7,8 – 9,10	Secondary	2.8 A_{RMS}	11	TIW – Ø 0.8 mm 1 layer
1 – 2	AUX – A	0.05 A_{RMS}	11	G2 – Ø 0.15 mm 1 layer
2 – 3	AUX – B	0.05 A_{RMS}	28	
A – 5	Primary – B	0.17 A_{RMS}	90	G2 – Ø 0.2 mm 2 layers

Note: Primaries A & B are in series
Cover wire ends with teflon tube

Figure 36. Windings position

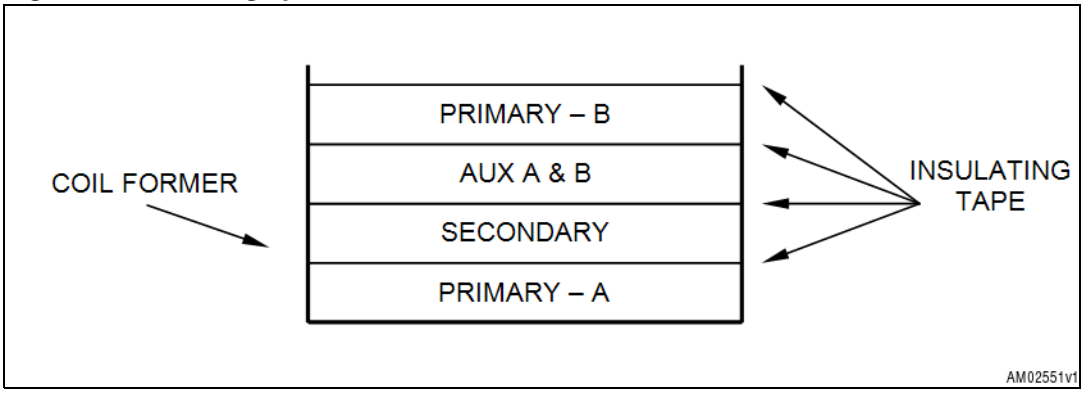

9.2 Mechanical aspect and pin numbering

- Maximum height from PCB: 22 mm
- Coil former type: vertical, 5+5 pins (pin 6 removed)
- Pin distance: 3.81 mm
- Row distance: 10.16 mm
- Manufacturer: Magnetica
- P/N: 1031.0010

Figure 37. Bottom view

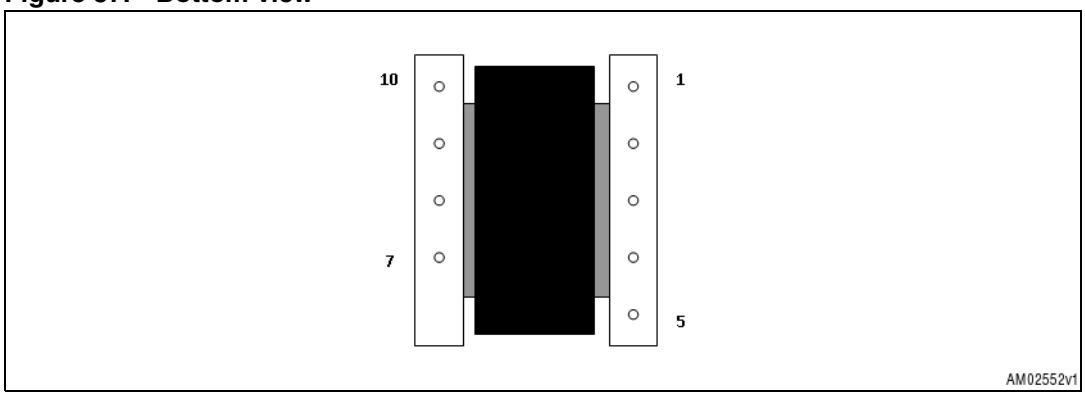

10 PCB layout

Figure 38. Top side silk screen and copper

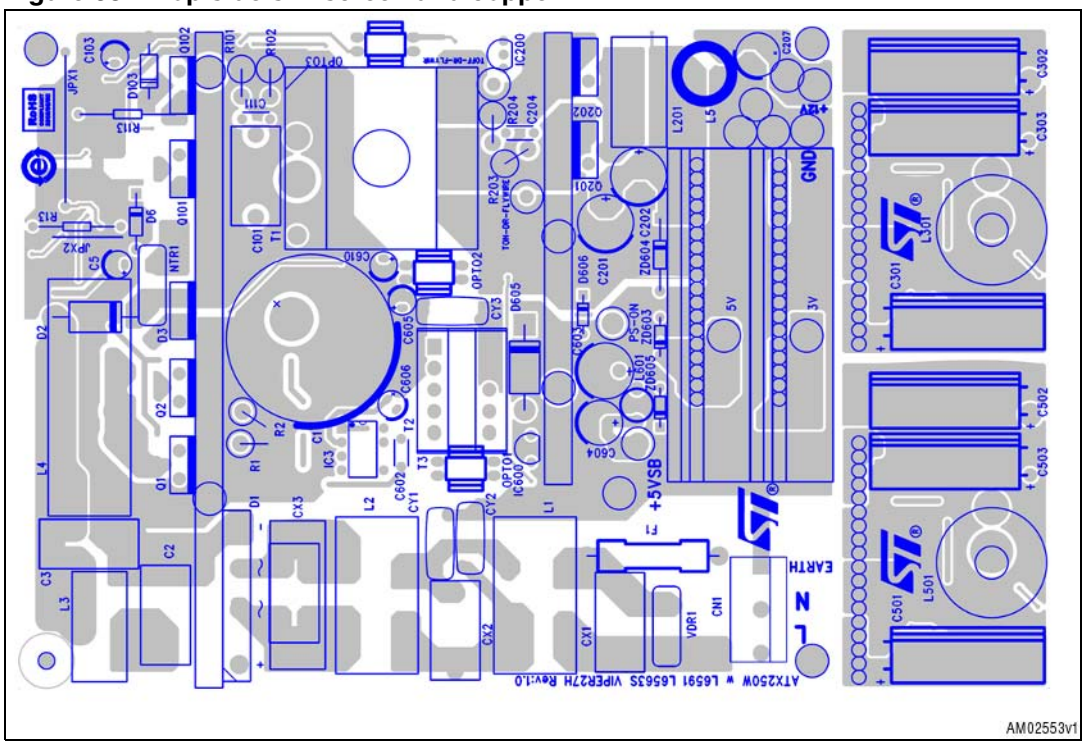

Figure 39. Bottom side silk screen and copper (mirror view)

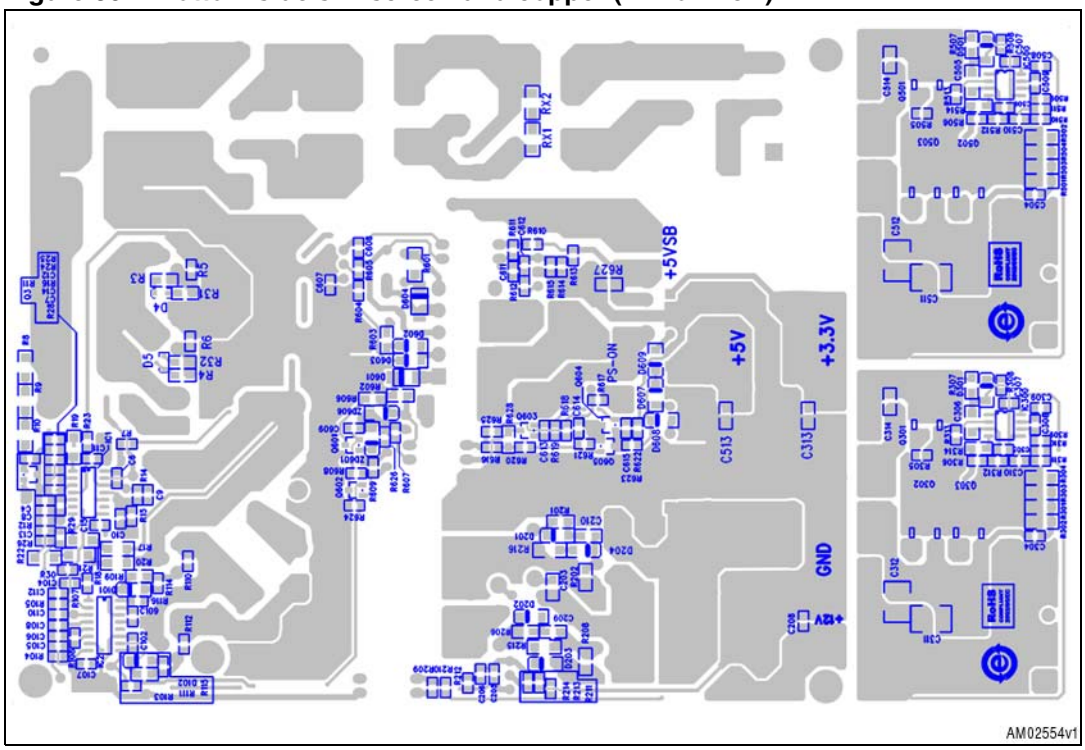

11 Revision history

Table 17. Document revision history

Date	Revision	Changes
24-Aug-2010	1	Initial release
28-Jan-2011	2	Added: *Chapter 4.4 on page 27* Updated: *Figure 1*, *Chapter 4.1*, *Figure 14*

Please Read Carefully:

Information in this document is provided solely in connection with ST products. STMicroelectronics NV and its subsidiaries (“ST”) reserve the right to make changes, corrections, modifications or improvements, to this document, and the products and services described herein at any time, without notice.

All ST products are sold pursuant to ST’s terms and conditions of sale.

Purchasers are solely responsible for the choice, selection and use of the ST products and services described herein, and ST assumes no liability whatsoever relating to the choice, selection or use of the ST products and services described herein.

No license, express or implied, by estoppel or otherwise, to any intellectual property rights is granted under this document. If any part of this document refers to any third party products or services it shall not be deemed a license grant by ST for the use of such third party products or services, or any intellectual property contained therein or considered as a warranty covering the use in any manner whatsoever of such third party products or services or any intellectual property contained therein.

UNLESS OTHERWISE SET FORTH IN ST’S TERMS AND CONDITIONS OF SALE ST DISCLAIMS ANY EXPRESS OR IMPLIED WARRANTY WITH RESPECT TO THE USE AND/OR SALE OF ST PRODUCTS INCLUDING WITHOUT LIMITATION IMPLIED WARRANTIES OF MERCHANTABILITY, FITNESS FOR A PARTICULAR PURPOSE (AND THEIR EQUIVALENTS UNDER THE LAWS OF ANY JURISDICTION), OR INFRINGEMENT OF ANY PATENT, COPYRIGHT OR OTHER INTELLECTUAL PROPERTY RIGHT.

UNLESS EXPRESSLY APPROVED IN WRITING BY AN AUTHORIZED ST REPRESENTATIVE, ST PRODUCTS ARE NOT RECOMMENDED, AUTHORIZED OR WARRANTED FOR USE IN MILITARY, AIR CRAFT, SPACE, LIFE SAVING, OR LIFE SUSTAINING APPLICATIONS, NOR IN PRODUCTS OR SYSTEMS WHERE FAILURE OR MALFUNCTION MAY RESULT IN PERSONAL INJURY, DEATH, OR SEVERE PROPERTY OR ENVIRONMENTAL DAMAGE. ST PRODUCTS WHICH ARE NOT SPECIFIED AS "AUTOMOTIVE GRADE" MAY ONLY BE USED IN AUTOMOTIVE APPLICATIONS AT USER’S OWN RISK.

Resale of ST products with provisions different from the statements and/or technical features set forth in this document shall immediately void any warranty granted by ST for the ST product or service described herein and shall not create or extend in any manner whatsoever, any liability of ST.

ST and the ST logo are trademarks or registered trademarks of ST in various countries.

Information in this document supersedes and replaces all information previously supplied.

The ST logo is a registered trademark of STMicroelectronics. All other names are the property of their respective owners.

© 2011 STMicroelectronics - All rights reserved

STMicroelectronics group of companies

Australia - Belgium - Brazil - Canada - China - Czech Republic - Finland - France - Germany - Hong Kong - India - Israel - Italy - Japan - Malaysia - Malta - Morocco - Philippines - Singapore - Spain - Sweden - Switzerland - United Kingdom - United States of America

www.st.com