AN1905
APPLICATION NOTE

ST7MC THREE-PHASE BLDC MOTOR CONTROL SOFTWARE LIBRARY

INTRODUCTION

This application note describes one of the software libraries available for the ST7MC MCU. The ST7MC microcontroller comes with a dedicated motor control cell (MTC) and can drive both permanent magnet DC/AC motors (PMDC/PMAC also called BLDC) and induction AC motors. This application note describes the ST7MC software library required to control a BLDC motor with a trapezoidal 6-step drive in sensor or sensorless mode, open or closed loop, and in current or voltage mode. The control of a PMAC motor in Sinewave mode with sensors is detailed in application note AN1947. The control of an AC induction motor in Sinewave mode is detailed in application note AN1904.

The library is made of different C modules, compatible with both COSMIC (www.cosmic-software.com) and METROWERKS (www.metrowerks.com) toolchains. The functions are grouped into several families, making this library an easy way to go through any BLDC project development. Used in conjunction with the ST7MC starter kit (ST7MC-BLDC-KIT), evaluation can be achieved in a very short time, as the library eliminates the need to study the MCU in detail.

A basic knowledge of C Language, PMDC motor drives and power inverter hardware is required.

Table of Contents

INTRODUCTION 1

OVERALL SOFTWARE ARCHITECTURE 5

1 GETTING STARTED WITH TOOLS 7

1.1 WORKING ENVIRONMENT 7

1.2 SOFTWARE TOOLS 7

1.2.1 PROGRAMMERS 7
1.2.2 Emulators 8

1.3 LIBRARY SOURCE CODE 9

1.3.1 Download 9
1.3.2 File structure 9

1.4 UTILITIES 10

1.4.1 lib.h file 10

2 CUSTOMIZING THE WORKSPACE FOR YOUR ST7MC DERIVATIVE 11

2.1 USING STVD7 RELEASE 2.5.X 11

2.1.1 Memory mapping with the COSMIC toolchain 11
2.1.2 Memory mapping with the METROWERKS toolchain 12

2.2 USING STVD7 RELEASE 3.X.X 12

2.3 "VERSION.H" FILE 14

2.4 ADDITIONAL OR UP-TO-DATE TECHNICAL LITERATURE 15

3 GETTING STARTED WITH THE LIBRARY USING THE ST7MC-KIT/BLDC 16

3.1 INTRODUCTION 16

3.2 RUNNING THE MOTOR 16

3.3 STANDALONE MODE AND CLOSED LOOP OPERATION 18

3.4 NOTE ON DEBUGGING TOOLS 19

3.4.1 Low voltage applications (below 30V) 19
3.4.2 Medium-high voltage application (above 30V) 20

3.5 USING YOUR OWN POWER STAGE 21

3.6 CHECKING THE CURRENT SENSOR RESISTOR VALUE 21

3.6.1 Maximum current 22
3.6.2 Interpreting the current feedback/settings in the GUI 23

Table of Contents

4 MODULES PRESENTATION, LIBRARY ROUTINES 25

4.1 LIBRARY REFERENCES 25

4.2 MTC SOFTWARE LAYER 25

4.2.1 List of available routines 26
4.2.2 List of MTC interrupt routines 36

4.3 APPLICATION LAYER 45

4.3.1 regul.c 45
4.3.2 adc.c 45
4.3.3 it_ST7MC.c 46
4.3.4 ports.c 47
4.3.4.1 Push button reading 47
4.3.4.2 LEDs 47
4.3.5 spi.c 47
4.3.6 LinSCI.c 48

5 HOW TO DEFINE AND ADD A MODULE (STVD7 2.5.X) 49

5.1 COSMIC TOOLCHAIN 49

5.2 METROWERKS TOOLCHAIN 50

6 CODE EXAMPLE 51

7 PMDC (PMAC) MOTOR CONSIDERATIONS 53

7.1 PHYSICAL CONSIDERATIONS 53

7.1.1 Checking the number of pair poles of the motor 53
7.1.2 Connecting the sensor outputs to the board 54

7.2 CONTROL STRATEGY CONSIDERATIONS 55

7.2.1 Voltage versus current mode 55
7.2.2 Choosing a demagnetization type (Sensorless mode only) 56
7.2.3 The 4 Z event sampling methods (Sensorless) 57
7.2.3.1 At the end of the PWM low state 57
7.2.3.2 At PWM On, with delay once 58
7.2.3.3 At PWM On, with delay, at fSCF frequency 58
7.2.3.4 At fSCF frequency 58
7.2.3.5 Conclusion 59
7.2.4 Setting the PWM distribution 59

7.3 SOFTWARE SETTING CONSIDERATIONS 67

7.3.1 PI regulator implementation and tuning 67
7.3.2 Adjusting falling/rising Bemf settings 74
7.3.3 Completion of Fine Tuning and Other Software Considerations 75

Table of Contents

8 REVISION HISTORY 76

OVERALL SOFTWARE ARCHITECTURE

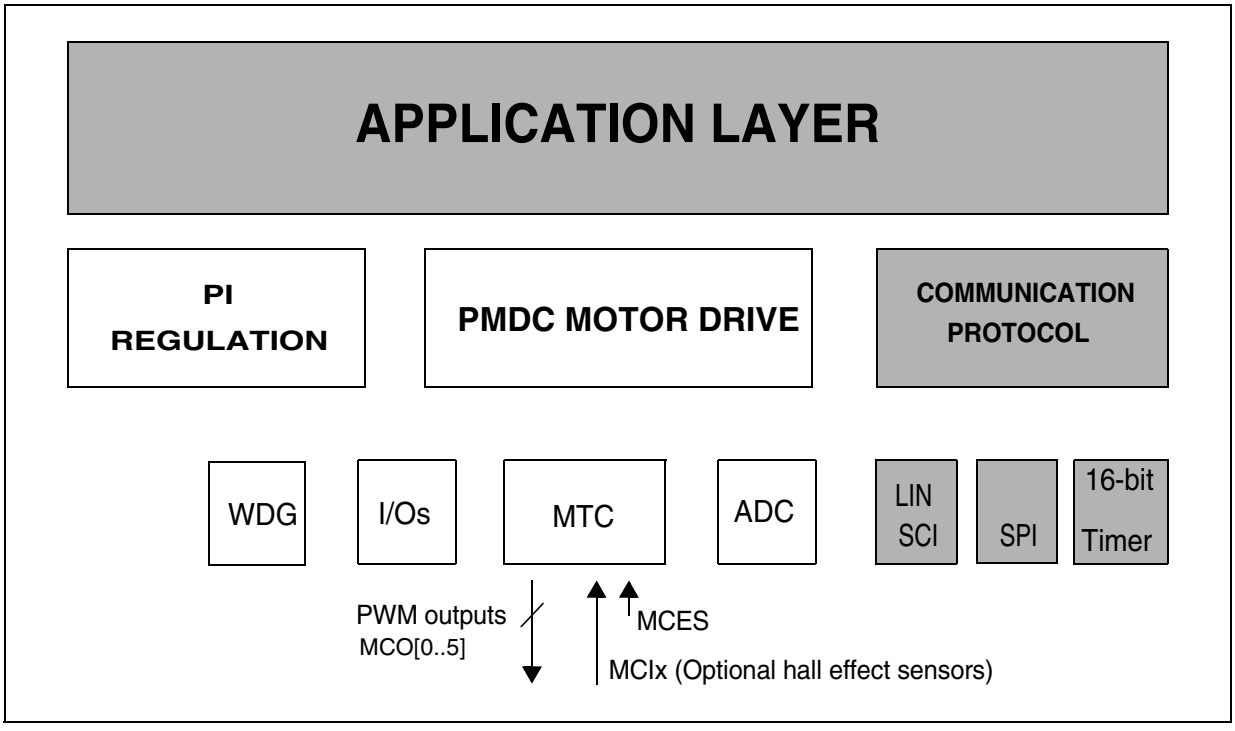

ST7MC Library Version 1.0 Characteristics (CPU running at 16 MHz)

- BLDC (trapezoidal 6 step method) modes available:

1. Sensorless : Back EMF voltage on the non-energized phase is monitored and used to trigger the commutation events

   Sensor : Hall effect sensors trigger the commutation events.

2. Voltage : PWM duty cycle is set directly via 12-Bit PWM Generator.

   Current : Internal current loop and external voltage reference are used conjointly to set the maximum current in motor windings. PWM duty is automatically set according to current feedback loop output.

3. Open loop operation.

   Closed loop operation : PI regulation, 1 to 255 ms sampling time.

- 12-bit PWM generation frequencies:

Current mode, Voltage mode: fixed 390Hz, 625Hz, 961Hz, 1.25Khz, 1.56Khz, 3.13Khz, 6.25Khz, 10Khz, 12.5Khz, 15.4Khz, 18.1Khz, 20Khz, 25Khz, 33.33Khz, 40Khz, 50Khz. (Voltage mode PWM frequency can be manually adjusted up to 50Khz in the library)

- Required ROM/RAM:

	ROM (bytes)		RAM (bytes)	
	Cosmic 4.5A	Metrowerks 1.1	Cosmic 4.5A	Metrowerks 1.1
Sensorless open loop	3400	4500	100	115
Sensorless closed loop	4700	6000	130	150
Sensor open loop	2370	3200	85	90
Sensor closed loop	3500	4600	120	125

These metrics include non motor control related code, implemented for demo purposes (such as ADC management, software time bases, etc.). Depending on the chosen memory model, the code size produced can be smaller or larger. This must therefore be considered only as indicative figures.

1 GETTING STARTED WITH TOOLS

1.1 WORKING ENVIRONMENT

The present software library was fully validated using the main hardware board (a complete inverter and control board) included in ST7MC-KIT/BLDC starter kit. The ST7MC-KIT/BLDC starter kit also includes a low-cost INDART hardware debugger, making this tool an ideal set for starting a project and evaluating/using the library.

Therefore, for rapid implementation and evaluation of the software discussed in this application note, it is recommended to acquire the ST7MC-KIT/BLDC starter kit and one of the two compatible C-toolchains.

1.2 SOFTWARE TOOLS

This library has been compiled using COSMIC and Metrowerks C-toolchains, running under STVD7 release 2.5.4 (ST Visual Debugger) and STVD7 release 3.x.x. Free IDE and demo versions of third party toolchains can be found at http://www.st.com/mcu/ (then select Downloads). A complete software package consists of:

- An IDE interface: STVD7 (free download available on internet), or third party IDE (e.g. SOFTEC Indart STX for ST7).

- A third party C-compiler: either Cosmic or Metrowerks (if needed, time-limited evaluation versions can be obtained upon request. A free 4K COSMIC version can compile all stand alone firmware configurations).

The choice of the C Toolchain is left to the appreciation of the user. Both COSMIC and METROWERKS are fully supported, and the dedicated workspace (compatible with ‘STVD7’ and ‘STVD7 for Indart’) can be directly opened in the root of the library installation folder (BLDC_Sensorless_Metrowerks_STVD2_5_4.wsp,BLDC_Sensorless_Cosmic_STVD2_5_4.wsp,BLDC_Sensor_Metrowerks_STVD3_x.wsp, BLDC_Sensor_Cosmic_STVD3_x.wsp).

In addition, the GUI included in the ST7MC-KIT/BLDC starter-kit allows customization of these libraries with variables prepared for your own motor. This makes the first implementation of this library significantly easier. See Section 3 of this document.

1.2.1 PROGRAMMERS

In order to program an MCU with the generated S19 file, you should also install the ST Visual Programmer software (please visit our internet web-site) and use a programming interface (STICK programmer for example for In-Circuit-Programming). The Visual Programmer tool provides an easy way to erase, program and verify the MCU content.

Please note that the INDART STX kit from SOFTEC (see next chapter) is also a programming tool (installation of DataBlaze Programmer is required).

Figure 1. STVisual Programmer software

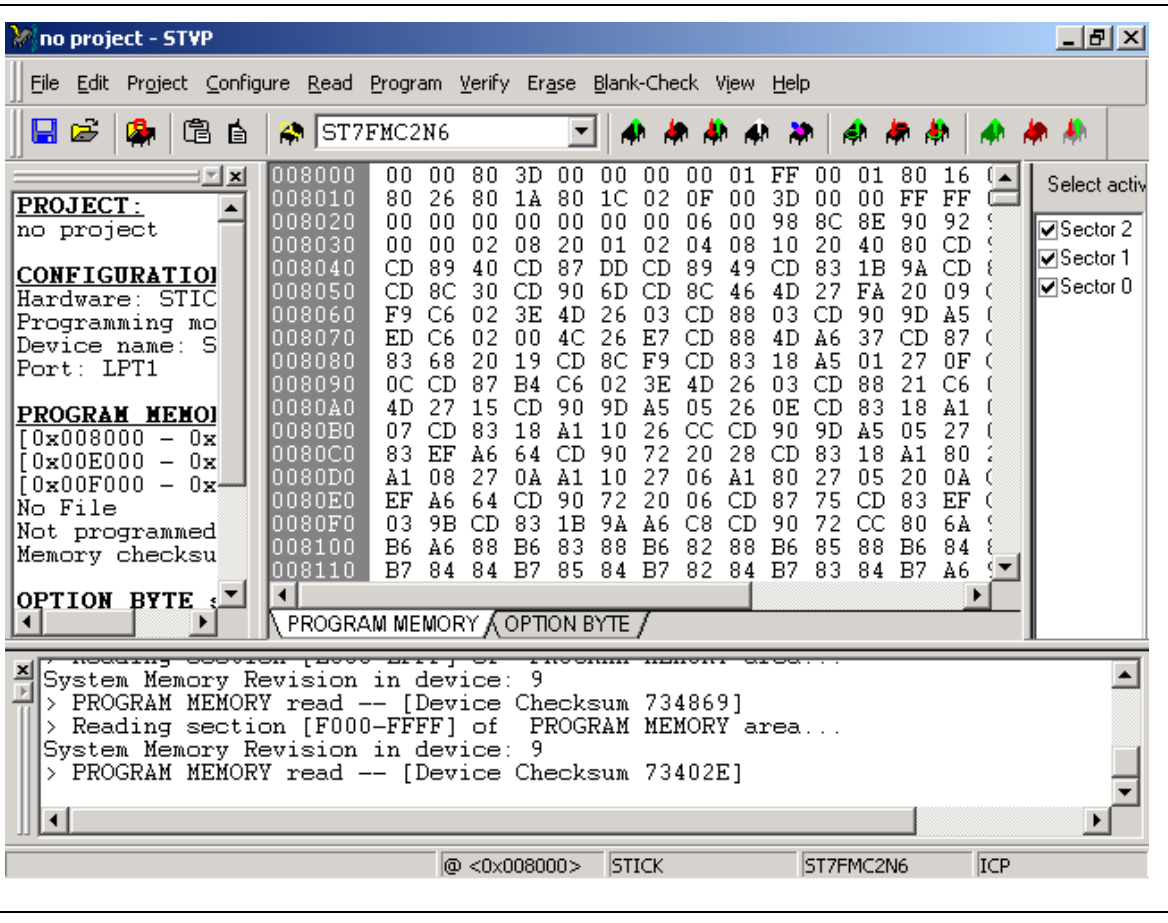

1.2.2 Emulators

Two types of real-time development tools are available for debugging applications using ST7MC:

- **In-circuit debugger from Softec (salestype : STXF-INDART/USB)**

The INDART from SOFTEC features an emulation and a programming tool. This is achieved using the In-circuit debug module embedded on the MCU. The real-time features of the Indart include access to real-time registers and 2 break-point settings. However, trace is not available.

- ST7MDT50-EMU3 emulator

Fully-featured emulator: real-time with trace capability, performance analysis, advanced breakpoints, light logical analyser capabilities, etc. It can also function as a programming tool when used with the delivered ICC ADDON module (select STMC-ICC as hardware target in STVP7). This ICC-ADDON module allows In-Circuit-Debugging with STVD7.

1.3 LIBRARY SOURCE CODE

1.3.1 Download

The complete source files are available for free on the ST website (http://www.st.com/mcu), in the *Downloads* section, as a zip file. This library is also copied by default on the hard-disk when installing the ST7MC Control Panel from Softec micro systems, or available in the Downloads section of www.softecmicro.com, software part (AK-ST7FMC System Software).

Important Note: It is highly recommended to check for the latest releases of the library before starting any new development, and then verify from time to time all release notes to be aware of any new features that might be of interest for the project. Registration mechanisms are also available on the web sites of ST and Softec Microsystems to automatically obtain update information.

1.3.2 File structure

Once the files are unzipped, the following library structure appears, depending on the tool-chain.

- Library release 1.0

This library contains the workspace for both the STVD7 2.5.4 and STVD7 3.x IDEs. Four separate folders are provided (see Figure 2).

Figure 2. Library structure for release 1.0

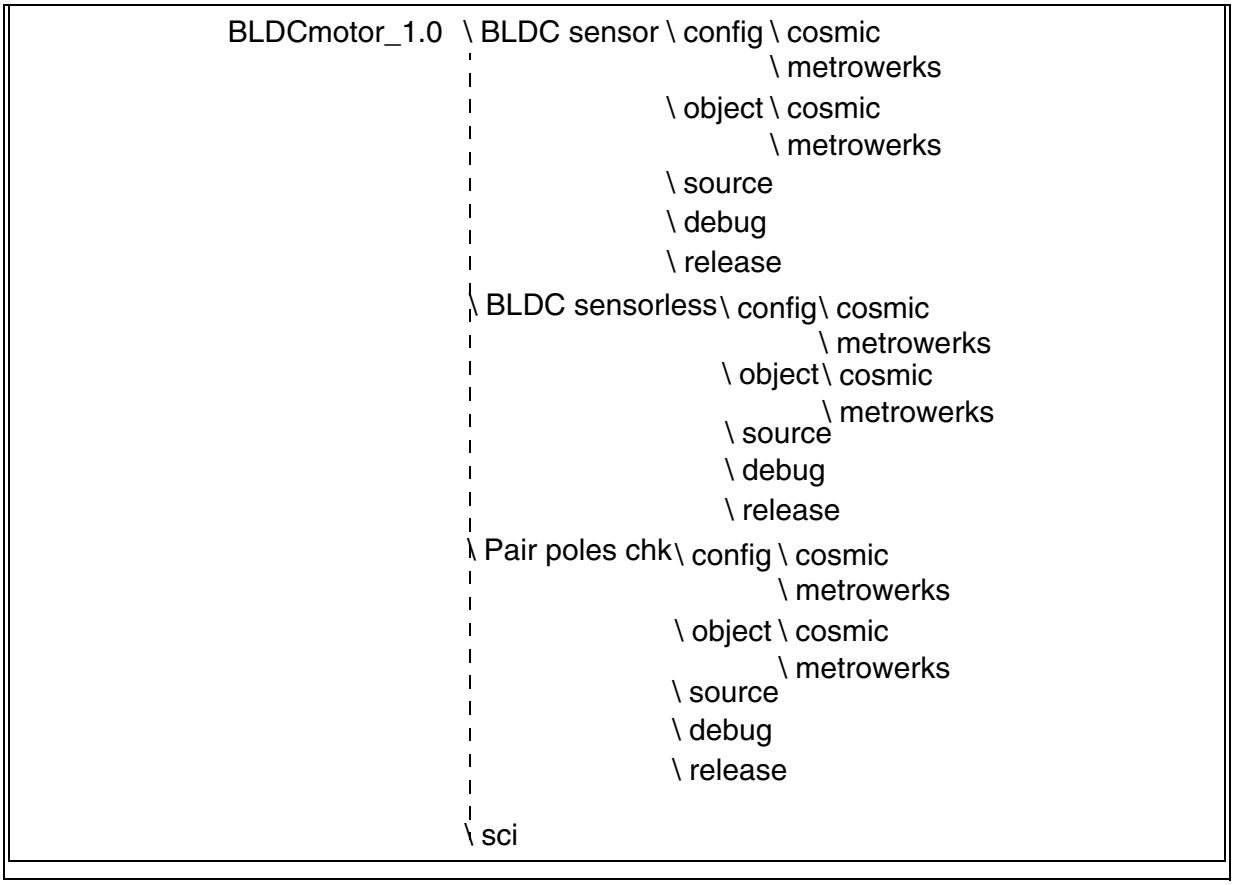

1.4 UTILITIES

1.4.1 lib.h file

The purpose of this header file is to provide useful macros and type re-definitions which will be used throughout the entire library:

– Re-definition of data types using the following convention: a first letter indicating if a variable is signed (s) or unsigned (u), plus a number indicating the number of available bits (for instance: u8, s16, etc.),

– Defines for assembly mnemonics used in C source code: Nop(), Trap(), etc.

– Common macros used for bit-level access (SetBit, ClrBit, etc.), to get the dimension of an array (DIM[x]), etc.

2 CUSTOMIZING THE WORKSPACE FOR YOUR ST7MC DERIVATIVE

2.1 USING STVD7 RELEASE 2.5.X

Figure 3. Memory Map

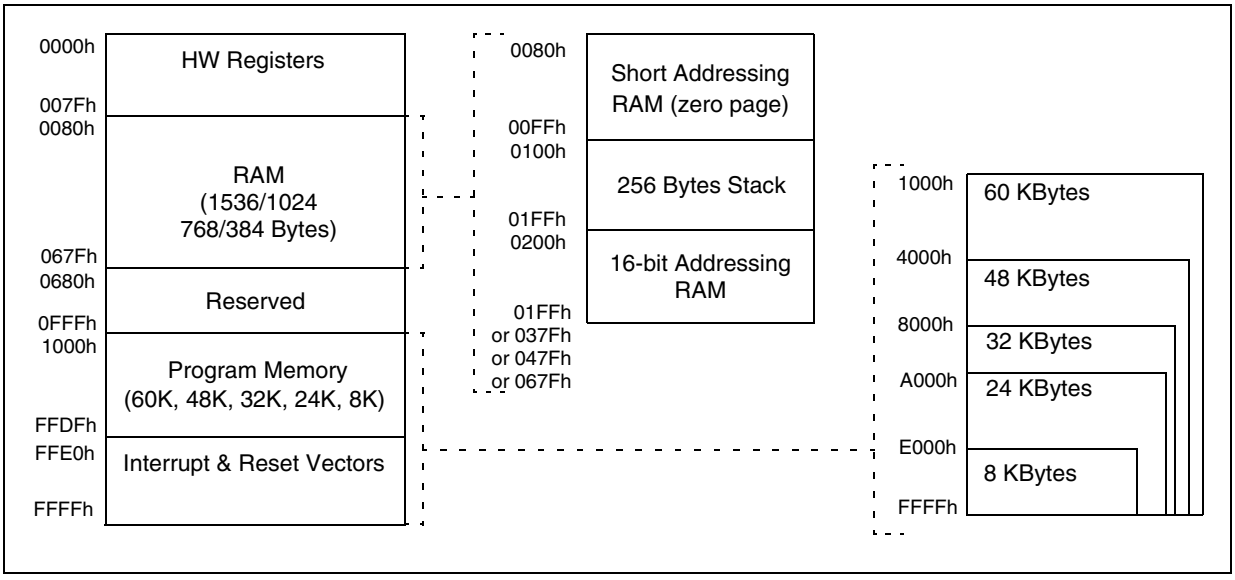

The ST7MC memory is shown on Figure 3. The memory arrangement may vary depending on the type of the MCU. Please refer to the datasheet in order to get more information.

The library is dedicated by default to the ST7FMC2N6B6 MCU (SDIP56, 32KB *Flash*, 1K RAM). In order to target another ST7MC MCU, you may need to modify the C-toolchain configuration files. Here's a basic example of what has to be done prior to any other modifications.

This example is based onto the ST7FMC2S4 MCU (TQFP 44, 16K Flash, 768 Bytes RAM)

2.1.1 Memory mapping with the COSMIC toolchain

Go into the ..\BLDC sensorless\config\Cosmic\ folder (..\BLDC sensor\config\Cosmic\ for sensor driving mode).

Edit the "BLDC_Cosmic.lkf" file and check the following lines, in 'SEGMENT DEFINITION':

```
# SEGMENT DEFINITION (.text, .const, .data, .bss, .bsct, .ubsct, .eeprom are c compiler
predefined sections)
+seg .text -b0x8000 -m0x7f00 -nCODE -sROM     # executable code
+seg .const -aCODE -it -sROM                  # constants and strings
+seg .bsct -b0x0080 -m0x007F -nZPAGE -sRAM    # initialized variables in SHORT range
+seg .ubsct -aZPAGE -nUZPAGE -sRAM            # uninitialized variables in SHORT range
+seg .share -aUZPAGE -is -sRAM                # shared segment
+seg .bss -b0x0200 -m0x0280 -nUDATA -sRAM     # uninitialized variables
+seg .data -aUDATA -nIDATA -sRAM              # initialized variables
```

This section contains the memory placement for the object files, listed just after this declaration.

In order to target the memory size of the ST7MC2S4, the sizes of ROM and RAM memory have to be changed (32K -> 16K Flash, 1K RAM -> 768 Bytes RAM)

+seg .text -b0xc000 -m0x3f00 -nCODE -sROM # executable code

where 0xc000 is the new starting address of the program memory and 0x3fe0 the size in bytes.

+seg .bss -b0x0200 -m0x0180 -nUDATA -sRAM # uninitialized variables

where 0x0180 is the new 16-bit addressing RAM memory in bytes.

2.1.2 Memory mapping with the METROWERKS toolchain

Go into ..\BLDC sensorless\config\Metrowerks (..\BLDC sensor\config\Metrowerks\ for sensor driving mode).

Edit the "BLDC_Metrowerks.prm" file

```
SECTIONS

    ZRAM = READ_WRITE 0x0080 TO 0x00FF;       // zeropage
    RAM = READ_WRITE 0x0200 TO 0x047F; // 16 bit adressing RAM
    ROM_SEC_2  = READ_ONLY  0x8000 TO 0xDFFF; // sector 2
    ROM_SEC_1  = READ_ONLY  0xE000 TO 0xEFFF; // sector 1
    ROM_SEC_0  = READ_ONLY  0xF000 TO 0xFEFF; // sector 0 - 0xFF00 to 0xFFDF reserved for ICC
```

This Section contains the memory locations of pages declared at the end of this file.

To target the memory size of the ST7MC2S4, ROM and RAM memory settings have to be changed (32K -> 16K Flash, 1K RAM -> 768 Bytes RAM).

ROM_SEC_2 = READ_ONLY 0xC000 TO 0xDFFF; // sector 2

where 0xc000 is the new starting address of the program memory

RAM = READ_WRITE 0x0200 TO 0x027F; // 16-bit addressing RAM

where 0x027F is the ending address of the 16-bit addressing RAM memory

Important Note: The application layer has been written for the STMFC2NB6. Using a different ST7MC sales type can imply the need for some modifications to the library, according to the available features (some of the I/O ports are not present on low-pin count packages). Please refer to the data sheet for details.

2.2 USING STVD7 RELEASE 3.X.X

The procedure is far easier with STVD7 3.x.x, as the makefile and linking command files are automatically generated.

In the workspace window, just right click on the selected project (either cosmic or metrowerks) and select “Add Files to Project”. You’ll be asked to select the source file.

When rebuilding the library, the configuration files will be updated accordingly.

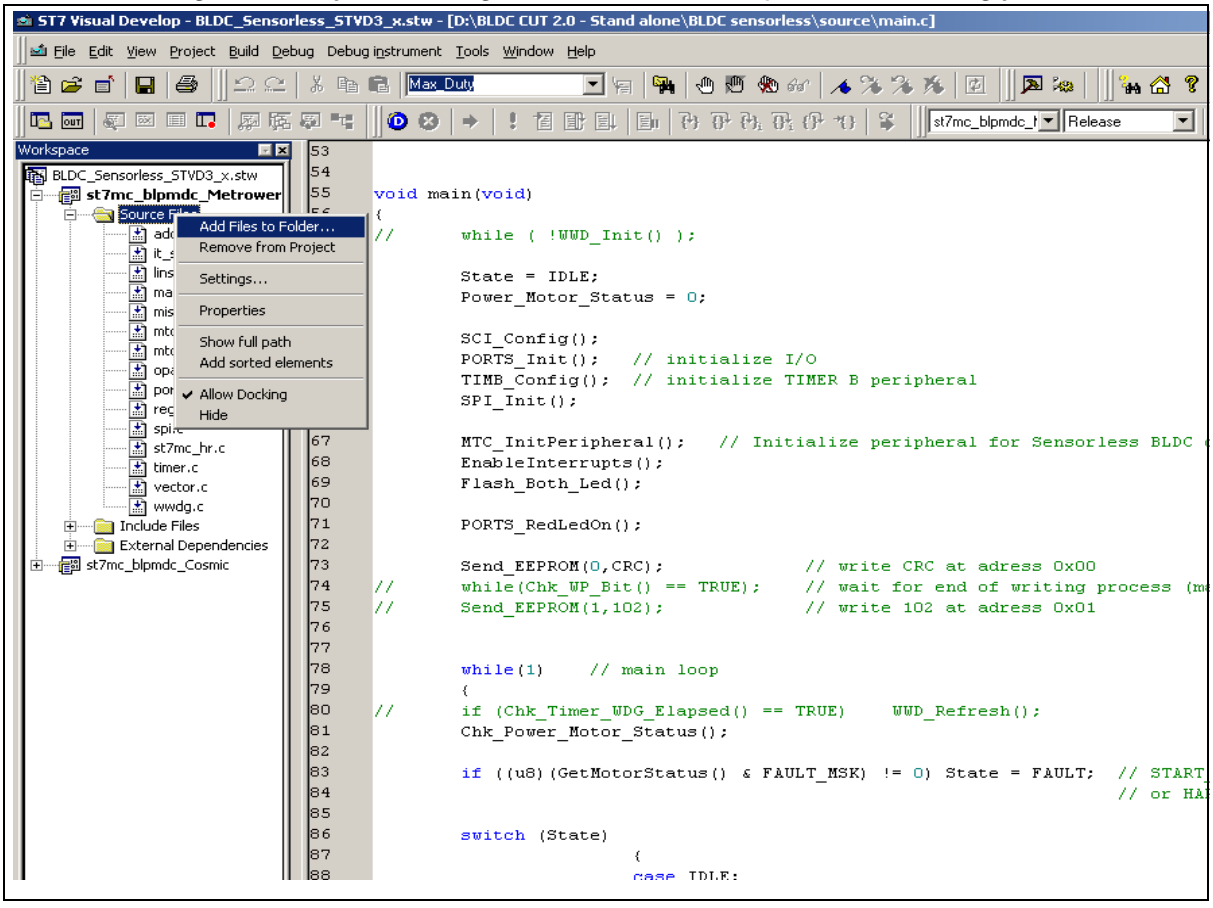

2.3 "VERSION.H" FILE

The purpose of this file is to declare the compiler options which will be used throughout the entire library compilation process.

– Define the PMDC driving mode: voltage/current, open/closed loop

– In sensorless mode, 3 more options are added for the demagnetization type: hardware, hardware with software backup, software.

Special care has to be taken for the demagnetization type, since the value range is 1, 2 and 3, corresponding respectively to hardware, hardware with software backup, software demagnetization type (HW, HSW, SW).

Other compiler options can be disabled/enabled by writing 0 or 1 in front of each declaration (0 for disable, 1 for enable). Figure 4 gives an example when setting the current/closed loop/alternate hard soft demagnetization in sensorless mode.

Figure 4. Settings for current/closed loop/alternate hard soft demagnetization (sensorless)

```
.....
/* Demagnetization type parameters */
#define HW      1               // 1 -> Hard demag only
#define HSW     2               // 2 -> Hard with soft backup
#define SW      3               // 3 -> Soft Demag only

/* Driving mode parameters */
#define CURRENT_MODE    0       // 0 -> Current mode
#define VOLTAGE_MODE    1       // 1 -> Voltage mode

/* Regulation type parameters */
#define OPEN_LOOP       0       // 0 -> Open loop
#define CLOSED_LOOP     1       // 1 -> Closed loop
....
/*****************************************************************************/
/* Option settings used throughout the compilation process */
#define SENSOR_TYPE     0       // no use in sensorless mode
#define DEMAG_TYPE      2       // no use in sensor mode
#define DRIVING_MODE    1
#define FEEDBACK_TYPE   1
```

After choosing the desired compiler options, the whole library has to be rebuilt. To launch the compilation, click on the 'rebuild all' icon.

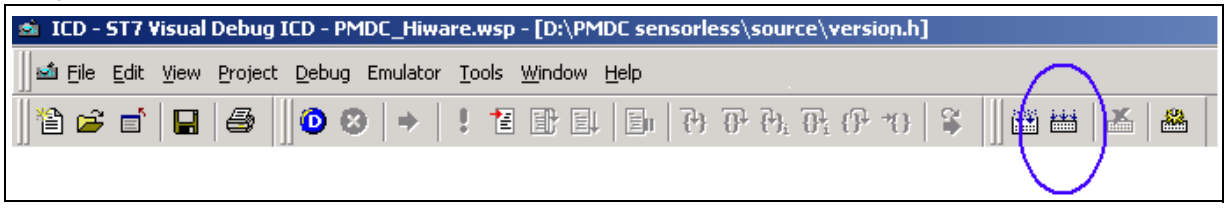

2.4 ADDITIONAL OR UP-TO-DATE TECHNICAL LITERATURE

More information can be found on the ST website (http://www.st.com/mcu).

More specifically, the latest documents and software can be found directly at:
http://www.st.com/mcu in the Downloads section

In addition, FAQ and Forums can be found directly at :
http://www.st.com/stonline/products/support/micro/st7/st7mc.htm

3 GETTING STARTED WITH THE LIBRARY USING THE ST7MC-KIT/BLDC

3.1 INTRODUCTION

There are two ways to get started with this software library.

The first way is to edit (with your motor specific features), compile and assemble the modules described in Section 5 and Section 6 of this application note. Then, program ST7MC and run your motor on hardware like the one provided in the ST7MC-KIT/BLDC Starter-kit.

The second way is to use the ST7MC-KIT/BLDC Starter-kit and follow this process:

- run and fine-tune the motor parameters with the GUI
- generate the *.H files and manually select/save the key parameters
- edit mtc.h file with key parameters
- compile, link, program ST7MC
- run the motor

If you are new to the BLDC environment or to the ST7MC product, the second method is highly recommended and is described below.

3.2 RUNNING THE MOTOR

As a starting point, the open loop mode shall be used for the first trials. Low-duty cycle values should be used also (alignment, ramp and real time settings) and then increased smoothly step by step.

Once the motor settings have been finely adjusted (whatever the driving mode, sensor/sensorless), the parameters have to be ‘injected’ into the stand-alone library. Simply click on ‘Generate *.h Files’ and select the source directory of the stand-alone library.

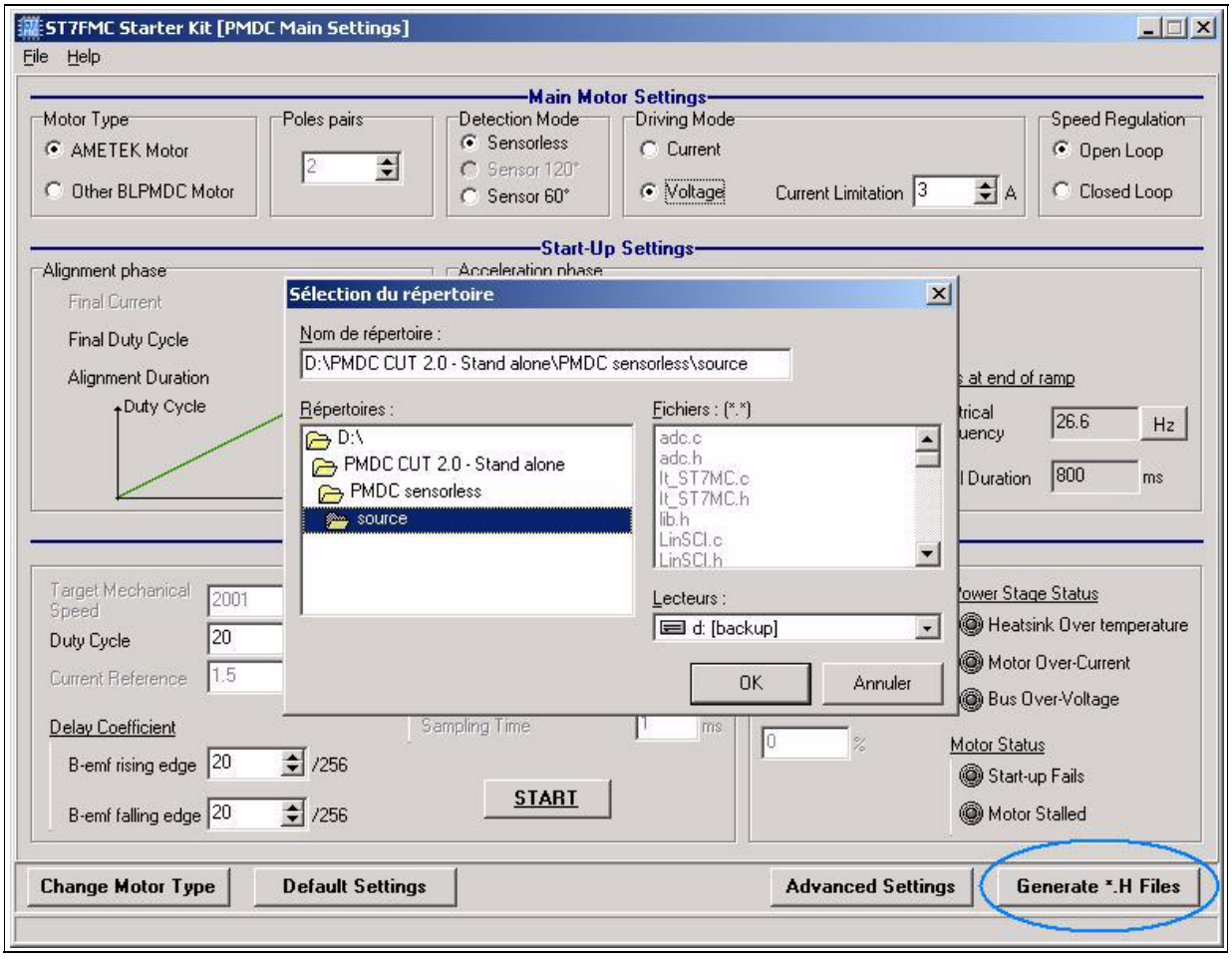

The GUI will generate 1 dedicated header file containing the settings of the motor (mainly the MTC peripheral settings) and another one containing the compiler options (see Figure 5).

Figure 5. Files generated in sensorless and sensor mode

SENSORLESS MODE	SENSOR MODE
"MTC_Settings_Sensorless.h" "Version.h"	"MTC_Settings_Sensor.h" "Version.h"

Once previous files have been generated, launch a new compilation. Firmware will then be compiled according to the new settings/compiler options automatically.

3.3 STANDALONE MODE AND CLOSED LOOP OPERATION

To run a BLDC motor in standalone closed loop, the approach should be, for a given target mechanical speed, to fine tune all the realtime parameters most adequate for this speed. For each target speed, these values should be recorded in the form of a table, which will be used by the ST7MC standalone firmware. You should collect data for 4 speeds: the min and max speeds specified in the GUI advanced screen, and 2 intermediate speeds of your choice. The ST7MC standalone firmware will then make a linear extrapolation of realtime parameters in between the 4 specified speeds to ensure smooth operation.

Once the data is collected, edit the 'mtc.h' file and fill in the field dedicated to the Rising/Falling Bemf, Ki, Kp coefficient calculation (see Figure 6).

Figure 6. 'mtc.h' field for coefficient computation

```
// See 'Mtc_Settings_Sensorless.h' for Freq_Min & Freq_Max values
//Fmin
#define Rising_Fmin    20     // Frequency min coefficient settings
#define Falling_Fmin   30
#define Ki_Fmin        10
#define Kp_Fmin        30

//F_1
#define F_1             1000  // 100 Hz
#define Rising_F_1     50     // Intermediate frequency 1 coefficient settings
#define Falling_F_1    40
#define Ki_F_1         20
#define Kp_F_1         10

//F_2
#define F_2             2000  // 200 Hz
#define Rising_F_2     30     // Intermediate frequency 2 coefficient settings
#define Falling_F_2    10
#define Ki_F_2         50
#define Kp_F_2         40

//Fmax
#define Rising_Fmax    10     // Frequency max coefficient settings
#define Falling_Fmax   16
#define Ki_Fmax        13
#define Kp_Fmax        18
```

Once the motor runs, rising/falling Back-EMF and proportional/integer coefficients are computed following a linear curve between F_min and F_1, F_1 and F_2, F_2 and F_max (see Figure 7). Note that F_min, F_1, F_2, F_max are electrical frequencies, with 0.1 Hz resolution (for example F_1 = 1234 means F_1 = 123.4Hz).

Figure 7. Linear curve for coefficient computation

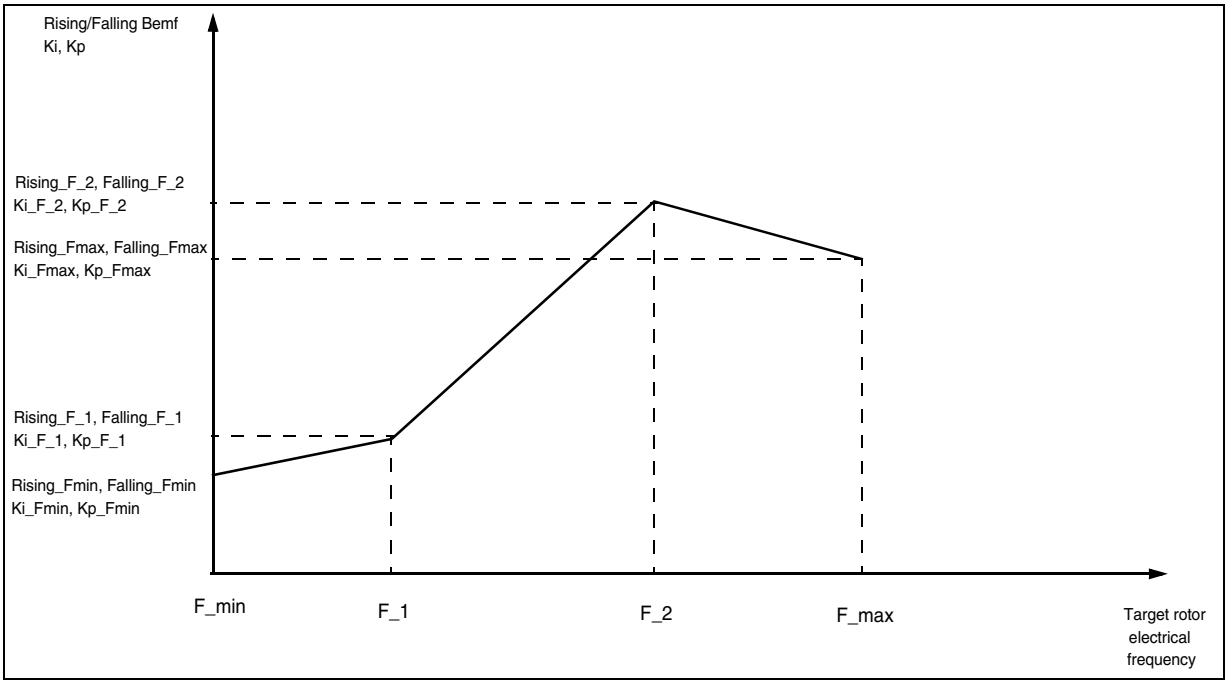

3.4 NOTE ON DEBUGGING TOOLS

3.4.1 Low voltage applications (below 30V)

For these voltage levels, the real-time emulator can be connected to the application, taking care to connect the protective boards provided with the MDT50 emulator (refer to the emulator datasheet for details). It offers trace and advanced breakpoint capabilities, as well as the possibility to automatically disable the PWM outputs on a breakpoint to avoid any DC current injection in the motor (see Figure 8).

This emulator is delivered with a set of three boards to protect some of the motor control dedicated I/Os from voltages greater than 5V. It is highly recommended to have them connected during the development. A neutral board is also provided in case the protection networks impedance (1K series resistor plus 5V3 zener diode) is an issue for the application. Refer to the ST7MDT50-EMU3 Probe user guide Section 3.1 for details.

An In-Circuit Debugging tool can also be directly connected, as long as an ICC connector is available on the application.

Important Note: When using ICD, during a breakpoint, the clock circuitry is not disabled: a permanent DC current may flow in the motor as the PWM outputs are enabled. It is thus recommended to use a power supply with fast current limitation capabilities or if possible to disable the PWM outputs (by inserting MTC_DisableMCOutputs function) before the breakpoint.

Figure 8. Configuring the Motor Controller clock state on breakpoint with MDT50

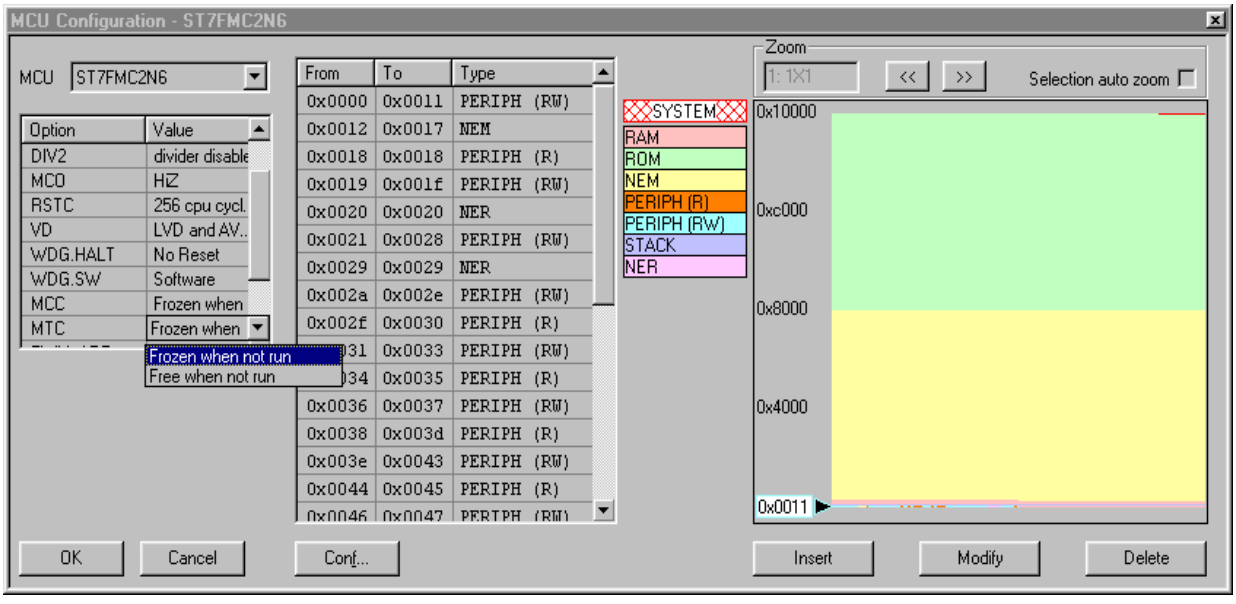

3.4.2 Medium-high voltage application (above 30V)

Here the real-time emulator use is not recommended, even if protective boards are inserted.

Important Note: In the event of high voltage applications connected to the mains, the application ground may be at a dangerous voltage; so too then would be the MDT50 emulator (**the protective boards do not provide galvanic isolation**).

For voltages above 30V, it is highly recommended to use only programmed devices. ICD debugging can be used in conjunction with an ICC isolation board, as the one provided with the ST7MC-KIT/BLDC starter kit, but the limitations mentioned in Section 3.4.1 nevertheless apply, and are even emphasized by the high voltage levels.

Good practice for real-time application debugging is to use “diagnostic tools” such as:

– RS232 communication which can be easily isolated,

– Standalone DAC (serial SPI-based model for instance) to be able to monitor signals on an oscilloscope,

– Debug outputs of the ST7MC itself (MCDEM and MCZEM pins), to monitor the D, Z and C events (refer to datasheet for details).

Refer to the application note AN438 (Safety Precautions for Development Tool Triac + Microcontroller) for further details when working with the mains supply.

3.5 USING YOUR OWN POWER STAGE

In order to configure the standalone library to match any kind of power stage, care should be taken to observe the logic input diagrams of the drivers. The starter kit uses three L6386 high-voltage high and low side drivers; other devices may require adjustments, depending on whether their logical inputs are active low or high. The '**MPOL**' register has then to be set manually in the firmware. Modifications can be done in the '**MTC_InitPeripheral**' routine (see Figure 9). It has to be noted also that the option byte has to be updated accordingly (MCO output states during reset).

Figure 9. MPOL register configuration

```
void MTC_InitPeripheral(void)
{

        MTC_ResetPeripheral();

        // Initialize registers in page 1 first
        SET_MTC_PAGE(1);
        MCONF = mem_MCONF;
        MPWME = (u8)(mem_MPWME | DG_MSK); //Force output of debug signal

        MPOL = ALL_ACTIVE_HIGH;        // (L6386D) <-- to be updated according to your own
device characteristics
                                       // ZVD bit=0; Z and D have opposite edge
```

The starter kit can also be connected directly to an external power stage using the socket J6 (26 pins).

3.6 CHECKING THE CURRENT SENSOR RESISTOR VALUE

The starter kit comes with a current sensor resistor of 0.047 Ohm (R21 on the schematic, see Figure 10). The current limiter of the MTC cell relies on a comparator that turns off the PWM when the voltage on this resistor has reached a limit (see Section 7.2.1 Voltage versus current mode for more details). This voltage is amplified by a factor of 11 by the internal OPAMP configured as a non-inverter amplifier (see **R66** and **R67** values).

Figure 10. Starter kit: zoom on the power stage

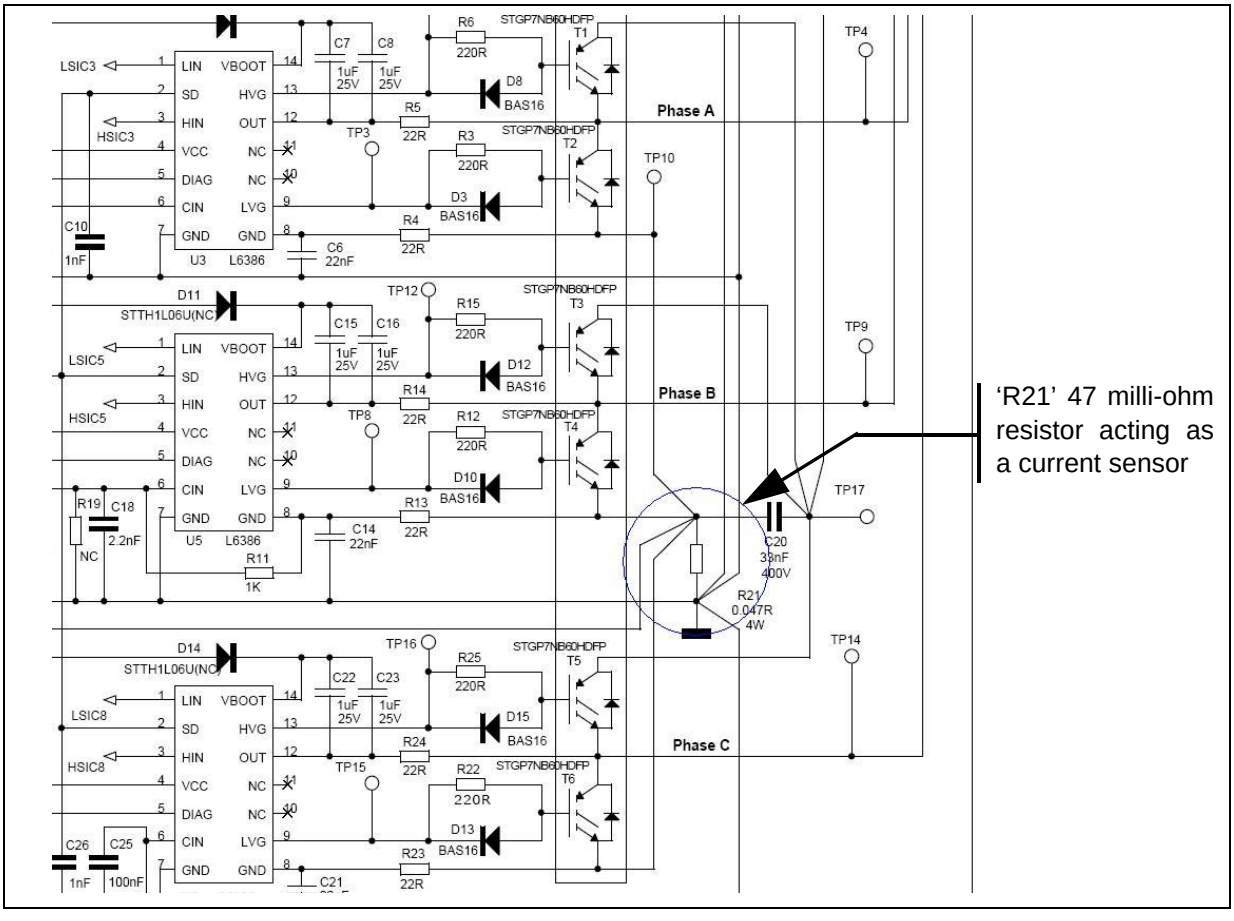

3.6.1 Maximum current

The saturation voltage of the internal comparator is 5 Volts. Figure 11 summarizes the hardware configurations when the winding current is set to maximum.

Figure 11. Configuration at max. current

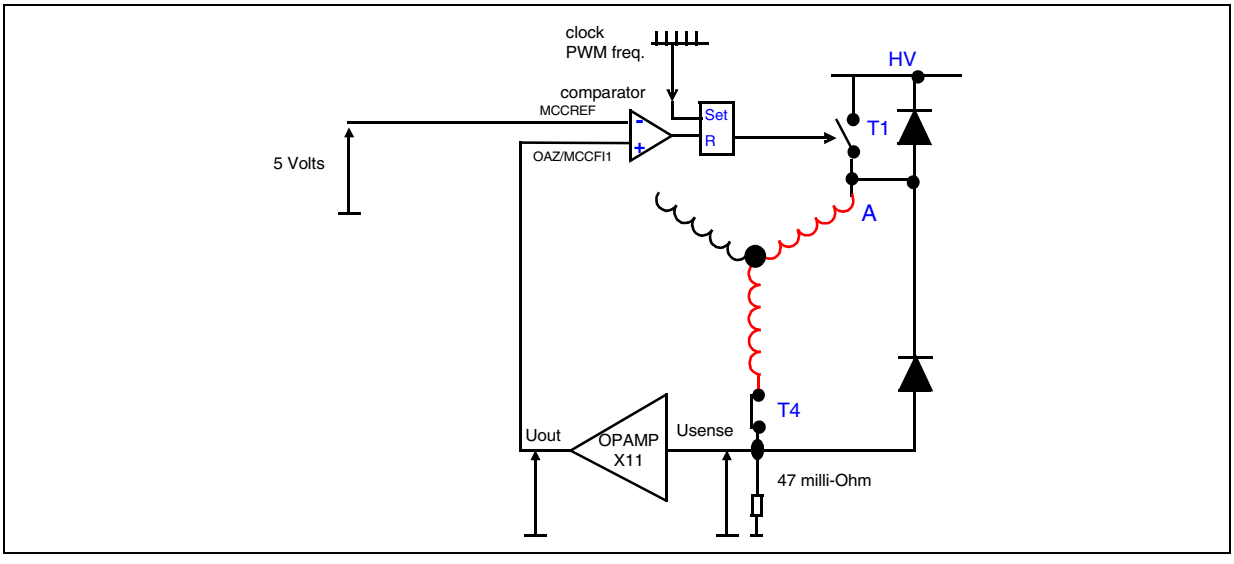

Therefore, the maximum current can be calculated:

$$I_{max} = V_{saturation} / (OPAMP_{gain} \times R_{sense})$$

Previous formula applied to the starter kit leads to:

$$I_{max} = 5 / (11 \times 0.047) = 9.67 \text{ amperes}$$

The current sense resistor value has to be adjusted when a different working range is needed. It is then necessary to decrease it when the current requirement is higher, or to increase it when the current requirement is lower. It is also possible to adjust the OPAMP gain, but it has to be remembered that:

– A High-gain OPAMP configuration may decrease EMC performance.

– A low-gain OPAMP combined with a high current sense resistor value will induce higher power loss (into the resistor).

– The power stage of the starter kit has been designed to handle power up to 1KW. For higher power, a bigger heat sink and current capability IGBTs or MOSFETs may be required.

3.6.2 Interpreting the current feedback/settings in the GUI

Settings related to current values on the GUI are treated as if the current sensor value were a 47 milli-Ohm type (with OPAMP gain equal to 11). When using a different resistor value, settings concerning current can't be read/written directly but have to be calculated manually using a proportional coefficient equal to:

$$K = 47 \text{ milli-Ohm} / \text{new value}$$

The actual current information is the one shown on the GUI multiplied by the proportional coefficient 'K' (See Figure 12 & Figure 13).

Figure 12. Using a 20 milli-Ohm resistor, K = 2.35 (47/20)

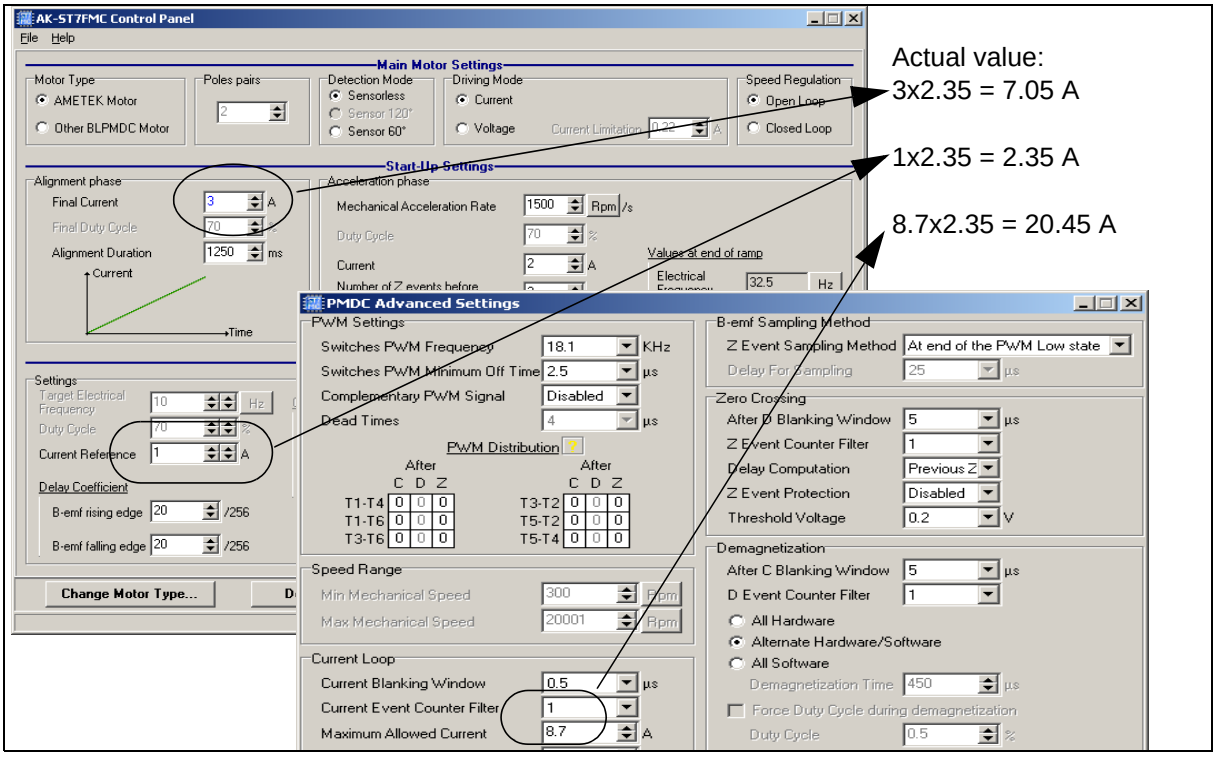

Figure 13. Using a 100 milli-Ohm resistor, K = 0.47 (47/100)

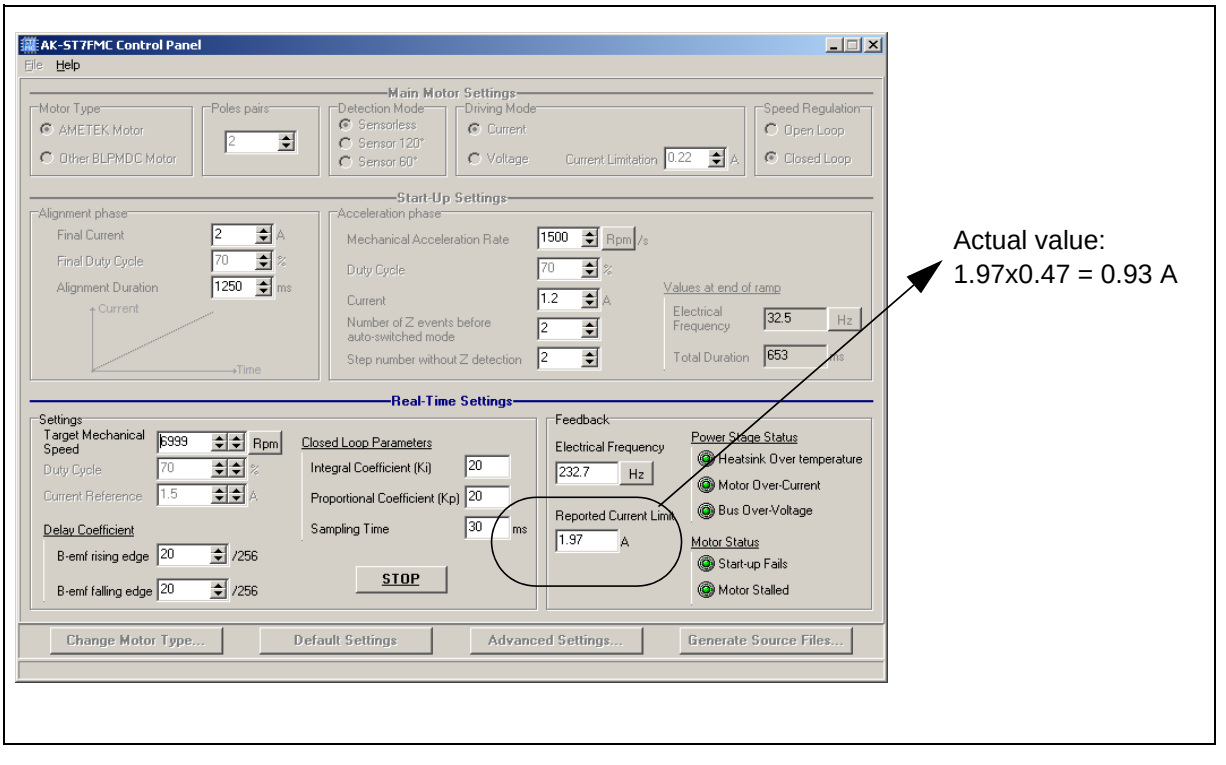

4 MODULES PRESENTATION, LIBRARY ROUTINES

4.1 LIBRARY REFERENCES

Functions are described in the format given below:

Synopsis	This section lists the referenced include files and prototype declarations.
Description	The functions are specifically described with a brief explanation of how they are executed.
Input	This section gives the format and units.
Returns	Gives the value returned by the function, including when an input value is out of range or an error code is returned.
Caution	Indicates the limits of the function or specific requirements that must be taken into account before implementation.
Warning	Indicates important points that must be taken into account to prevent hardware failures.
Functions called	Used to prevent conflicts due to the simultaneous use of resources.
Code example	Indicates the proper way to use the function if there are certain prerequisites (interrupt enabled, etc.).

Some of these sections may not be included if not applicable (no parameters, obvious use, etc.).

4.2 MTC SOFTWARE LAYER

The software related to the MTC peripheral is part of a module which is call '**mtc.c**'. This module refers to all the routines needed to initiate and run the peripheral properly. The dedicated MTC hardware registers declaration are also grouped into a module named '**mtc_hr.c**'.

This module provides:

- Basic setup
- Control routines
- Related interrupt handling routines
- Speed acquisition for closed loop operation

Routine prototypes can be found in the '**mtc.h**' header file.

4.2.1 List of available routines

The following is a list of available functions as listed in the mtc.h header file.

MTC_InitPeripheral . . . . . page 27
MTC_StartMotor . . . . . page 28
MTC_StopMotor . . . . . page 29
Set_Duty . . . . . page 30
Set_Target_Electrical_Frequency . . . . . page 31
active_brake . . . . . page 32
Get_Motor_Status . . . . . page 33
Set_Motor_Status . . . . . page 34
Chk_Motor_Stalled . . . . . page 35

MTC interrupt handling routines are described in the next chapter.

MTC_InitPeripheral

Synopsis

#include "mtc.h"

void MTC_InitPeripheral(void)

Description

The purpose of this function is to (re-)initialize the MTC cell. A reset of this peripheral is done first, and the hardware registers are then set with appropriate values.

Caution

It must be noted that part of MPOL and MDTG registers are written once, meaning they cannot be modified any further once the MTC_InitPeripheral() function has been executed

Functions called

MTC_ResetPeripheral()

See also

ST7MC Datasheet: MTC chapter.

MTC_StartMotor

Synopsis

#include "mtc.h"

void MTC_StartMotor(void)

Description

This function Initializes HW registers and SW variables needed in real time for the motor drive. To ensure a proper start-up, the bootstrap capacitors of the high side switch drivers are refreshed. Finally, this function performs the alignment of the rotor in a known position, and sets the flags of expected MTC interrupt events.

Functions called

Init_PI (closed loop only), MTC_EnableDirectAccess, MTC_DisableDirectAccess, MTC_EnableOutputs, RefreshBootstrap, MTC_EnableClock, MTC_DisableClock, AlignRotor

See also

ST7MC Datasheet: MTC chapter.

MTC_StopMotor

Synopsis	#include "mtc.h" void MTC_StopMotor(void)
Description	This function disables all motor control related interrupts and switches off all transistors. This puts the windings in floating state once they are completely demagnetized.
Functions called	MTC_EnableDirectAccess, MTC_DisableDirectAccess

Set_Duty

Synopsis

#include "mtc.h"

void Set_Duty(u16 duty)

Description

This function is used to refresh the MCPUH/L register contents (MCPVH/L in current mode).

Input

The ‘duty’ is a u16 variable, and has to be set according to the PWM frequency (MCPOH/L registers) for both voltage or current mode.

The desired duty cycle is set using this formula:

Duty = *desired duty (0 to 100%)* x MCPOH/L (voltage mode’)

Duty = *desired current limitation (Amp)* x MCPOH/L / 9.7(current mode)

Caution

In voltage mode, the ‘duty’ variable is directly linked to the PWM duty cycle while in current mode, the ‘duty’ variable sets the voltage reference (MCPVH/L, actually the current limitation) at the input of the MTC cell comparator (MCCREF pin, via a RC filter on the board).

See also

ST7MC Datasheet: MTC chapter.

Code example

Voltage mode:

20 Khz PWM frequency (ratio between 12-bit PWM clock and PWM frequency, MCPOHL = 16 MHz/20kHz = 800), desired duty = 40%:

duty = 40 x MCPOHL/100 = 320

-> Update_Duty(320);

Current mode:

*****Fixed*** *10 Khz PWM frequency (MCPOHL = 1600), desired current limitation = 4 Amp:*

duty = 4 x MCPOHL/9.7 = 4 x 1600/9.7 =

-> Update_Duty(660);

* hardware dependant. For other PWM frequencies, please check the RC filter value at the input of the MTC comparator cell (MCCREF pin).

Set_Target_Electrical_Frequency

Synopsis

#include "mtc.h"

void Set_Target_Electrical_Frequency(u16 target_freq)

Description

This function is used to refresh the MCPUH/L register contents (MCPVH/L in current mode). The output of the PI regulation loop routine is used to do so.

Input

The 'target_freq' is a u16 variable, and has to be set according to the desired target frequency (0.1Hz resolution).

The target electrical frequency is given by:

target_freq *= desired electrical frequency x 10* (0.1 Hz resolution)

Caution

Frequency is given with 0.1Hz resolution.

Functions called

regul_PI

See also

ST7MC Datasheet: MTC chapter.

Code example

desired electrical frequency : 100 Hz:

target_freq = 100 Hz x 10 = 1000;

-> Set_Target_Electrical_Frequency(1000)

Reminder:

Electrical frequency = number of pair poles x mechanical frequency

RPM speed = 60 x Mechanical frequency (RPM: revolutions per minute)

example: electrical frequency = 100 Hz, motor with 8 pair poles:

100Hz electrical <-> 100/8 =12.5Hz mechanical <-> 12.5 x 60=750 RPM

active_brake

Synopsis	#include "mtc.h" BOOL active_brake(u16 duty, u16 time)
Description	The purpose of this function is to switch the active brake of the motor, by sinking a DC current in 1 phase, another one being grounded.
Input	Duty cycle applied during active brake phase, with the Time given in milli-seconds
Returns	TRUE if brake time elapsed or duty sets to 0.
Caution	In voltage mode, the 'Duty' variable is directly linked to the PWM duty cycle while in current mode, the 'Duty' variable sets the voltage reference at the input of the MTC cell comparator (MCCREF pin, via a RC filter on the board).
Functions called	**MTC_EnableDirectAccess, MTC_DisableDirectAccess**
See also	ST7MC Datasheet: MTC chapter.
Code example	The 'duty' is a u16 variable, and has to be set according to the PWM frequency (MCPOH/L registers). Example: *PWM frequency set at 10 Khz, MCPOH/L = 1600 (ratio between 12-bit PWM clock and PWM frequency 16 MHz/10kHz = 1600)* Desired duty = 40% = 40 x MCPOHL/100 = 40 x 1600/100 = 640 Desired braking time : 2 sec = 2000 ms -> if (active_brake(640,2000) == TRUE) State = STOP; // stop motor

GetMotorStatus

Synopsis

#include "mtc.h"

u8 GetMotorStatus(void)

Description

This function returns the ‘MotorStatus’ byte.

Bit description:

MotorStatus
Sensorless

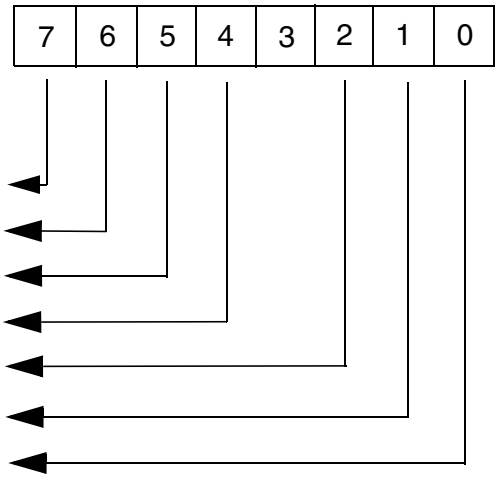

MotorStatus
Sensor

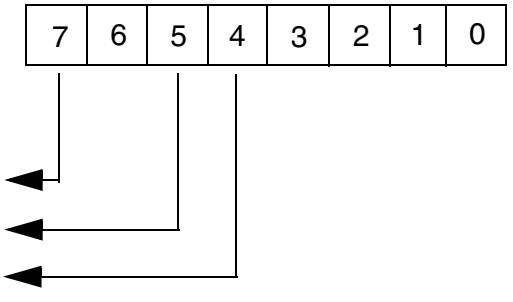

Returns

unsigned char

SetMotorStatus

Synopsis #include "mtc.h"

void SetMotorStatus(u8 status)

Description This function updates the ‘MotorStatus’ byte according to the ‘status’ byte parameter. Please see ‘GetMotorStatus’ routine description for status byte definition.

Input unsigned char

Chk_Motor_Stalled

Synopsis

#include "mtc.h"

void Chk_Motor_Stalled(void)

Description

The purpose of this function is to check the ratio of the MTC cell set in the MPCR register. If the ratio is equal to the maximum ratio (15), then the bit ‘MotorStalled’ of ‘Power_Motor_Status’ is set.

See also

ST7MC Datasheet: MTC chapter.

4.2.2 List of MTC interrupt routines

The following is a list of the MTC interrupt handling routines. These functions are all included in the ‘mtc.c’ module.

MTC_U_CL_SO_IT . . . . . page 37
MTC_C_D_IT . . . . . page 38
MTC_R_Z_IT. . . . . page 42

MTC_U_CL_SO_IT

Synopsis #include "mtc.h"

void MTC_U_CL_SO_IT(void)

Description This interrupt routine is entered once there is a current limitation, PWM update or Sampling Out event. Only the current limitation event is processed in the library: status flag is reset, and the bit 'OverCurrent' of 'Power_Motor_Status' is set.

See also ST7MC Datasheet: MTC chapter.

Figure 14. CLI event processing (sensorless/sensor)

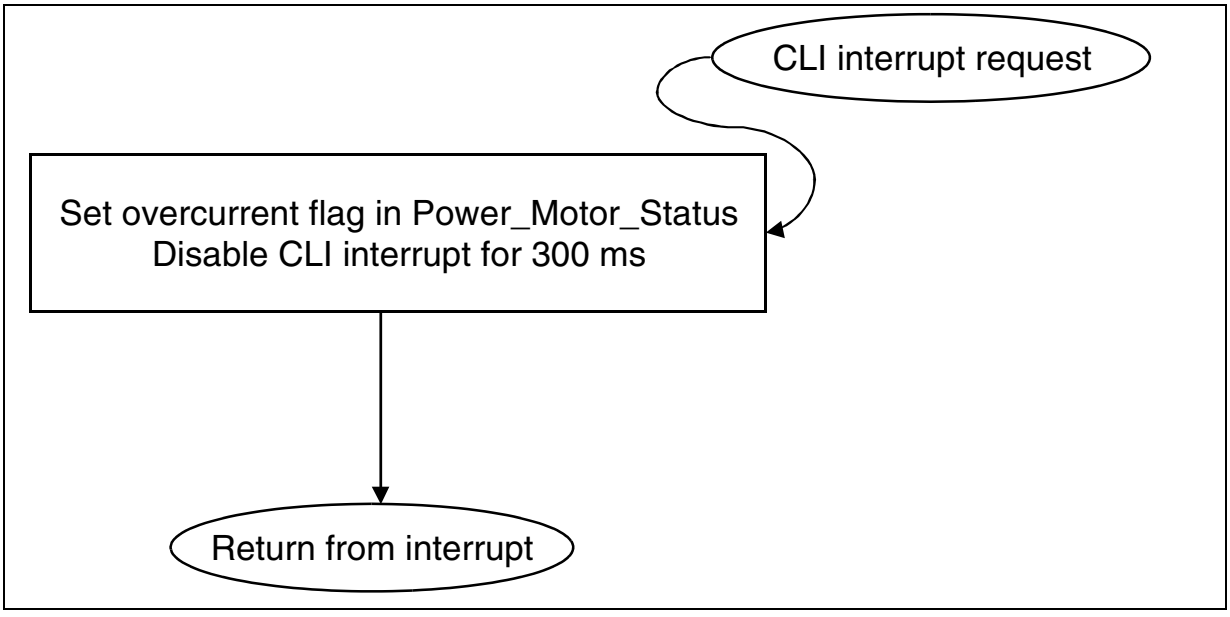

MTC_C_D_IT

Synopsis #include "mtc.h"

void MTC_C_D_IT(void)

Description This function is dedicated to the Commutation and Demagnetization interrupt service routine. Figures 15,16,17,18 & 19 show the routine flowcharts.

See also ST7MC Datasheet: MTC chapter.

Figure 15. Commutation event processing (Sensor mode only)

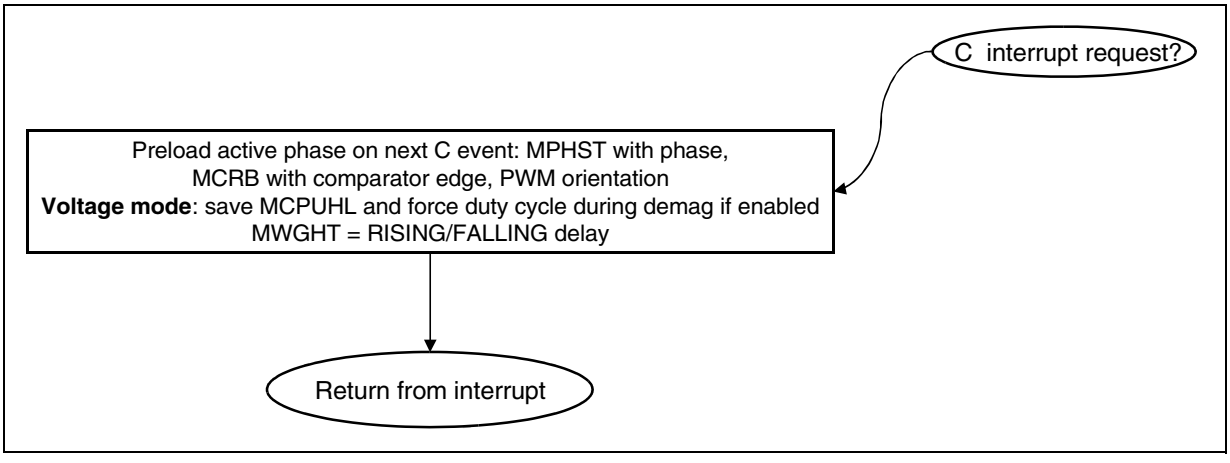

Figure 16. Commutation event processing (Sensorless mode only)

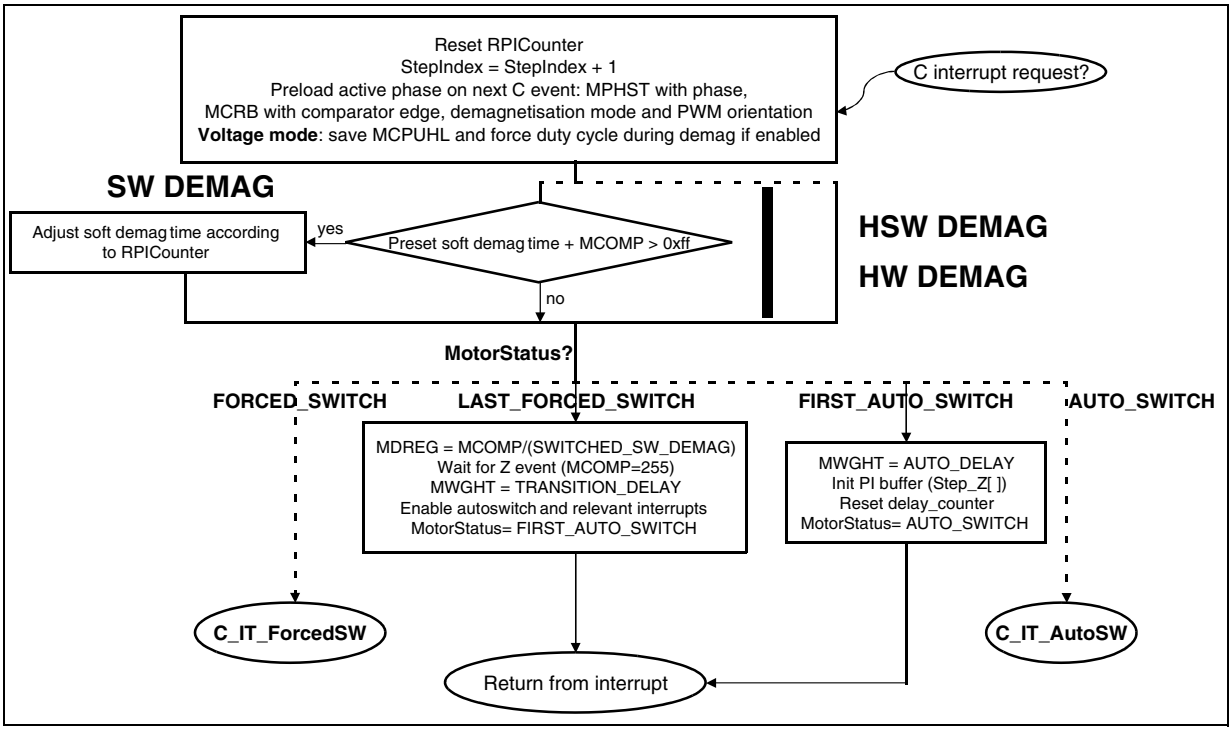

Figure 17. Commutation event processing (Sensorless mode only) continued

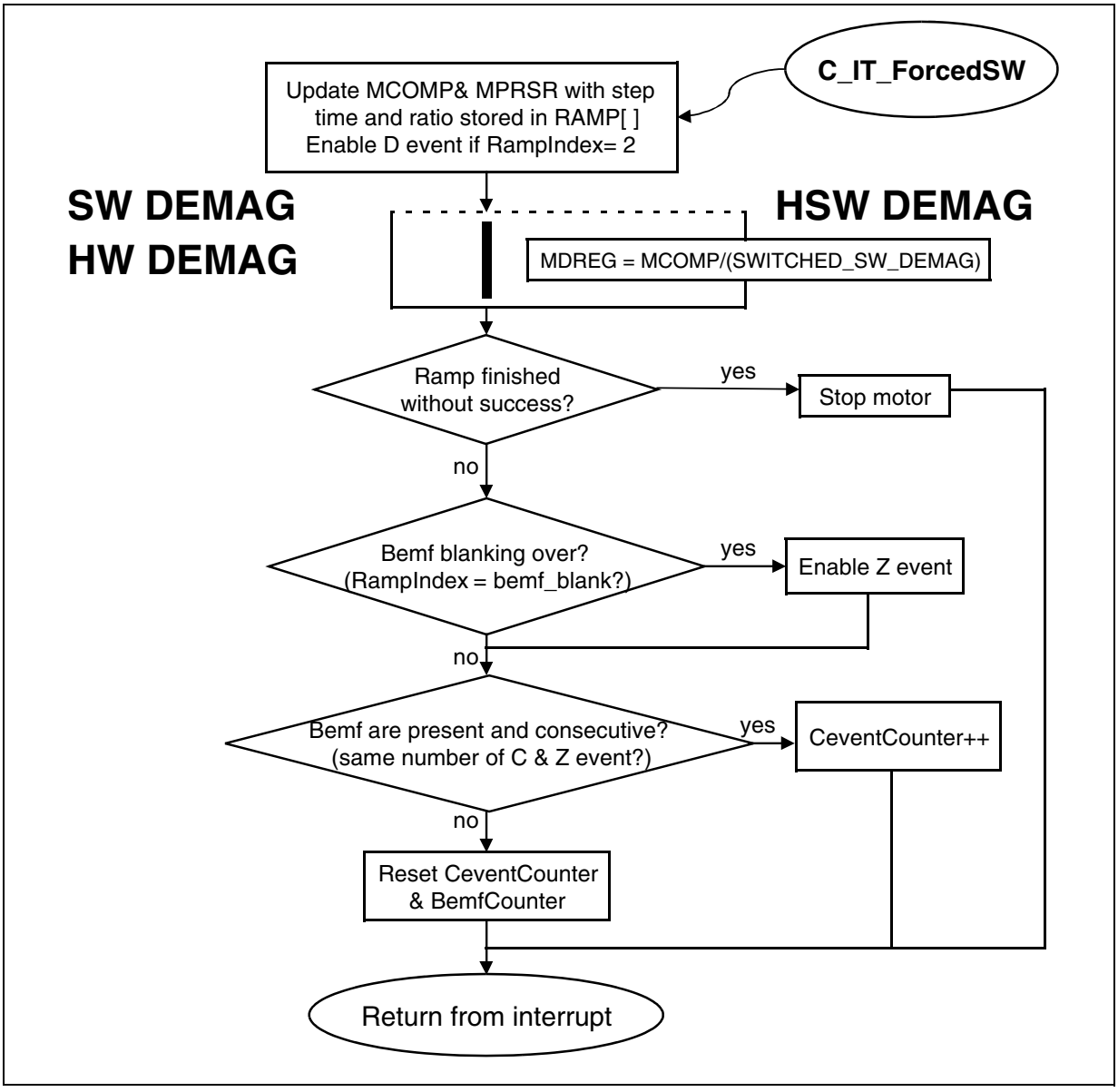

Figure 18. Commutation event processing (Sensorless mode only) continued

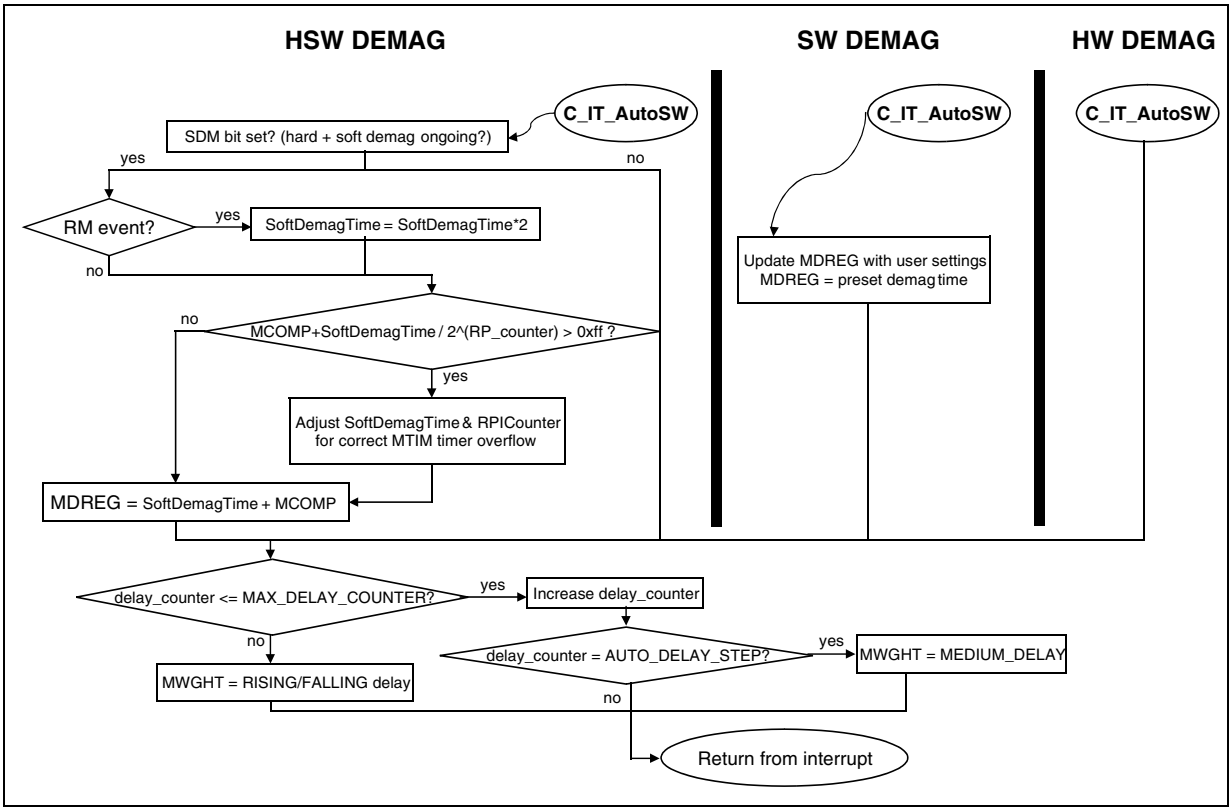

Figure 19. Demagnetisation event processing (Sensorless mode only)

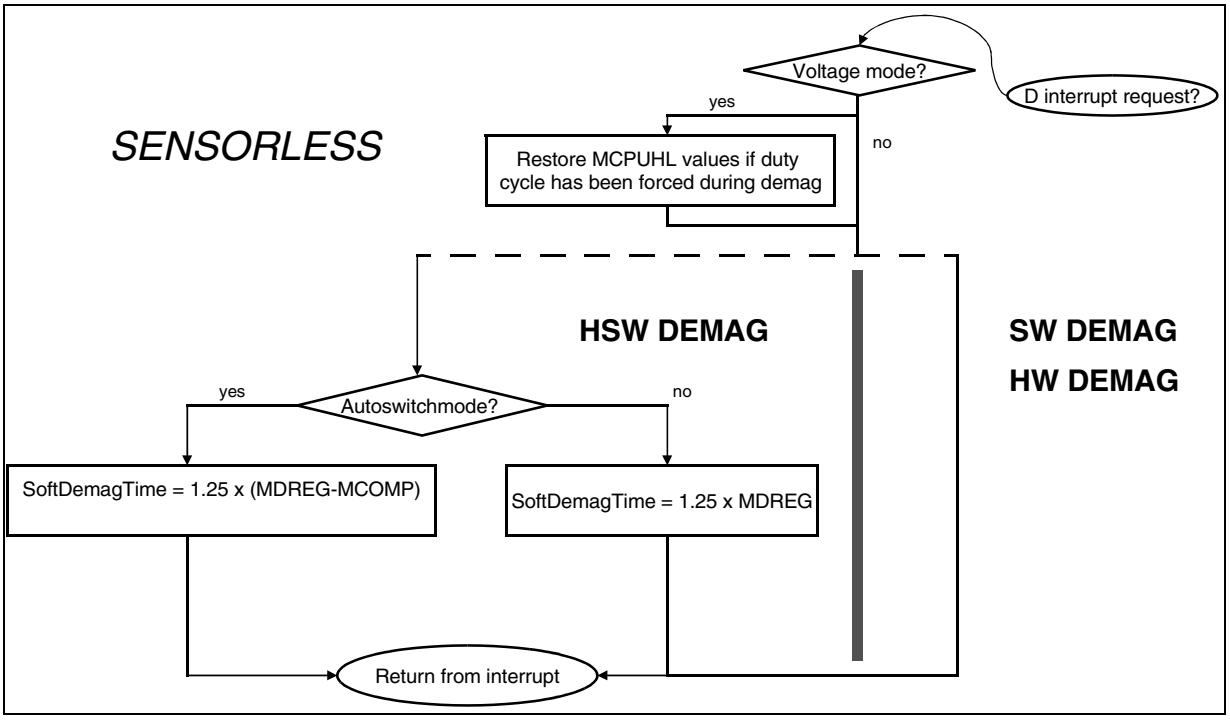

MTC_R_Z_IT

Synopsis #include "mtc.h"

void MTC_R_Z_IT(void)

Description This function is dedicated to the Zero-Crossing and Ratio Increment/ Decrement interrupt service routines. Figures 20, 21, 22, 23, 24 & 25 show the routine flowcharts.

See also ST7MC Datasheet: MTC chapter.

Figure 20. Z event processing (sensorless mode only)

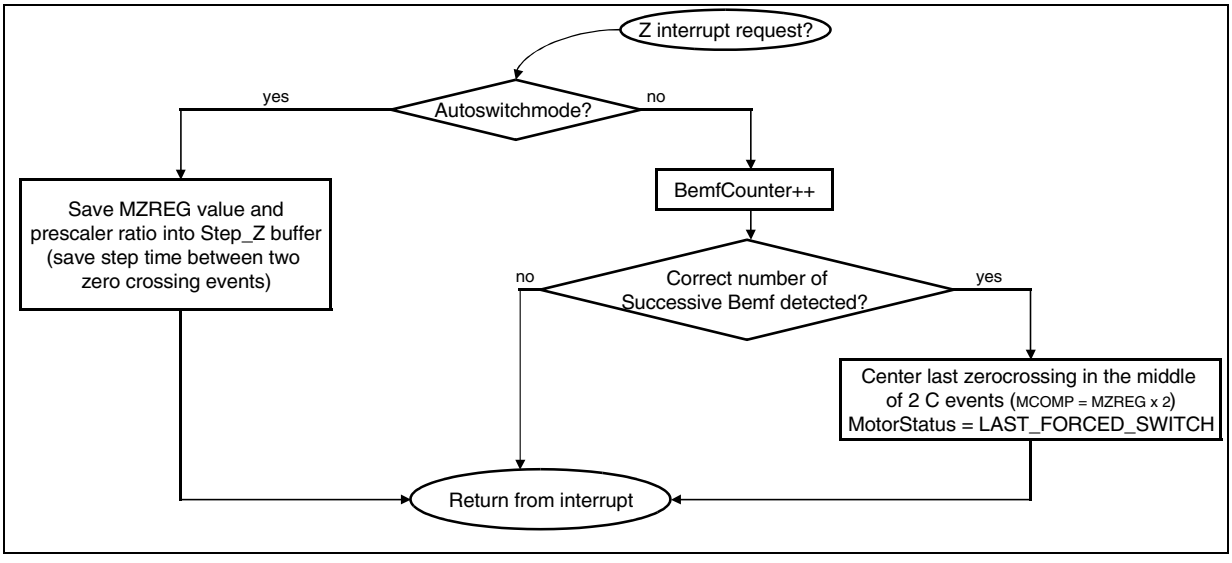

Figure 21. Z event processing (Sensor mode only)

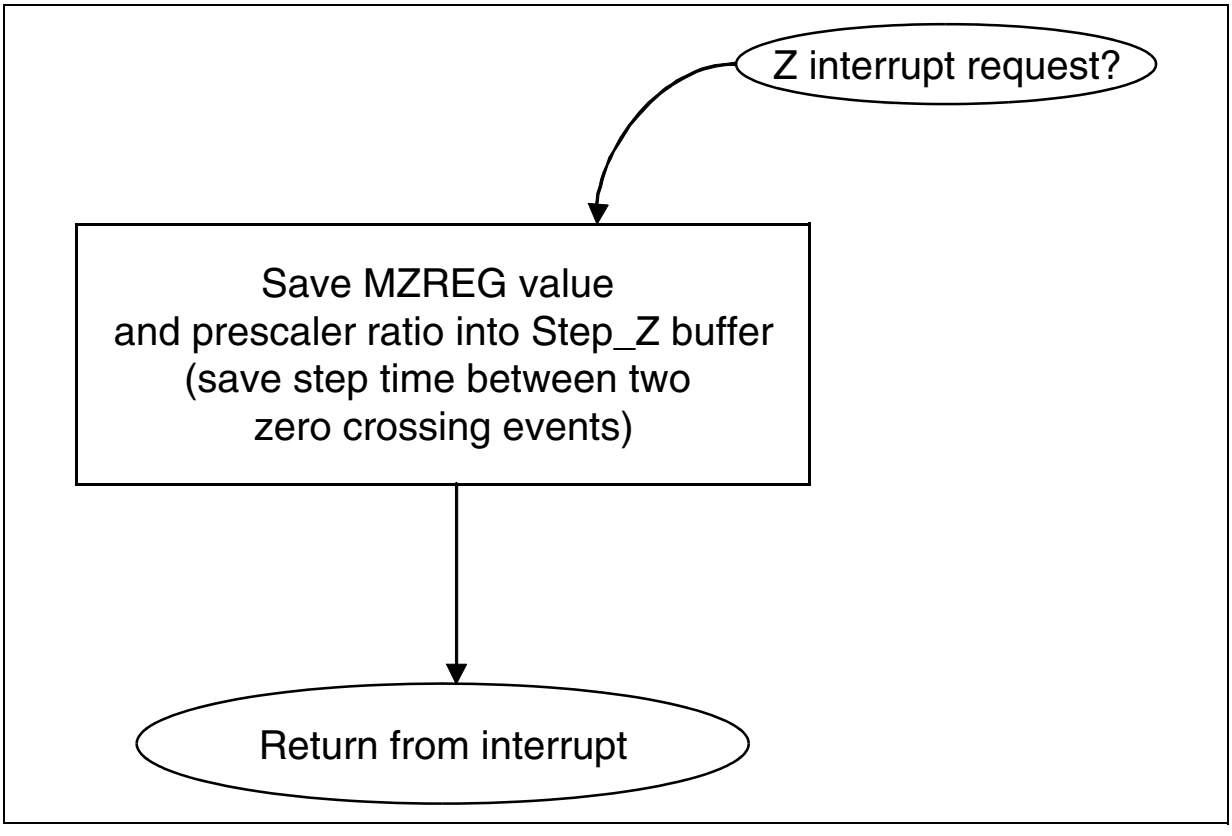

Figure 22. RP event processing (Sensorless mode only)

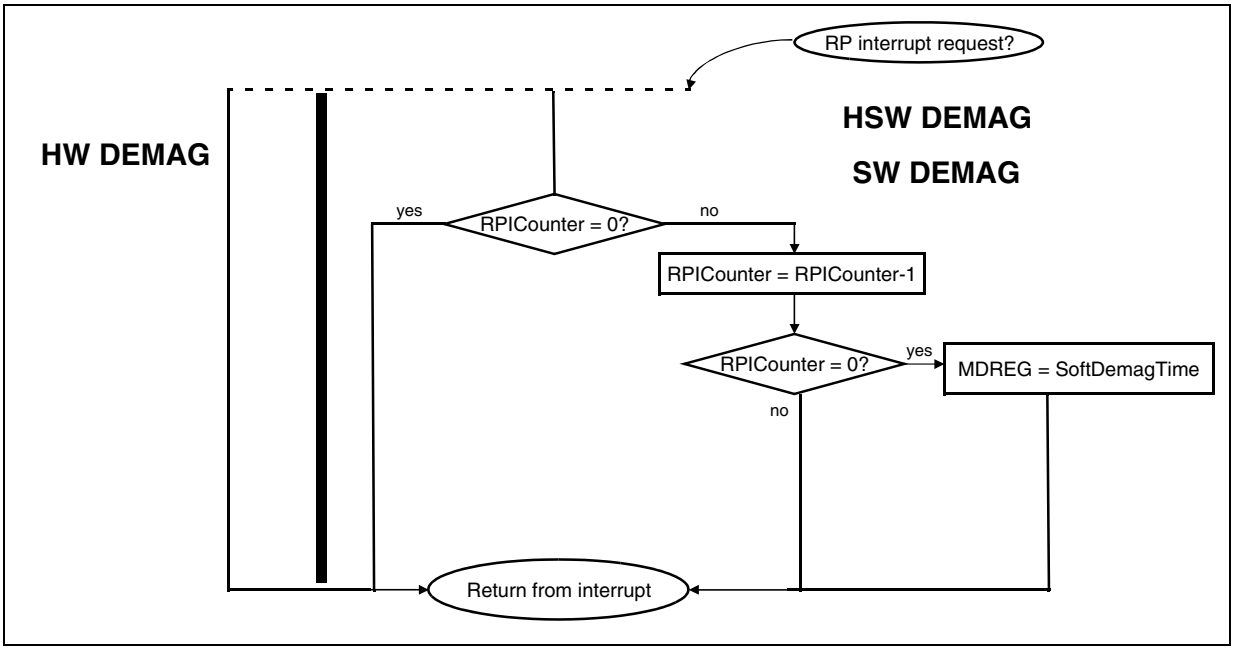

Figure 23. RP event processing (Sensor mode only)

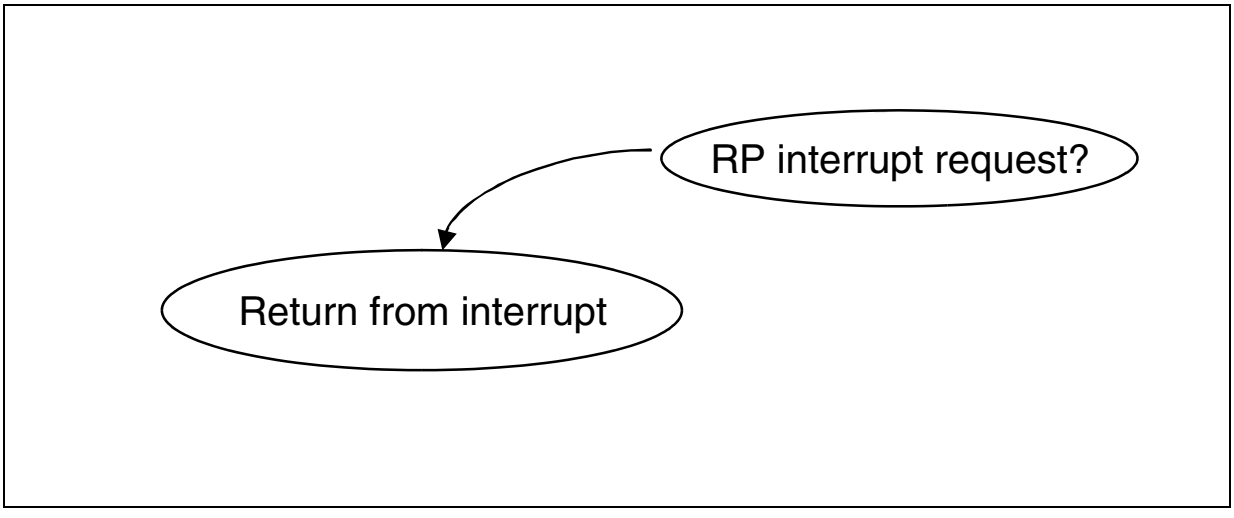

Figure 24. RM event processing (Sensorless mode only)

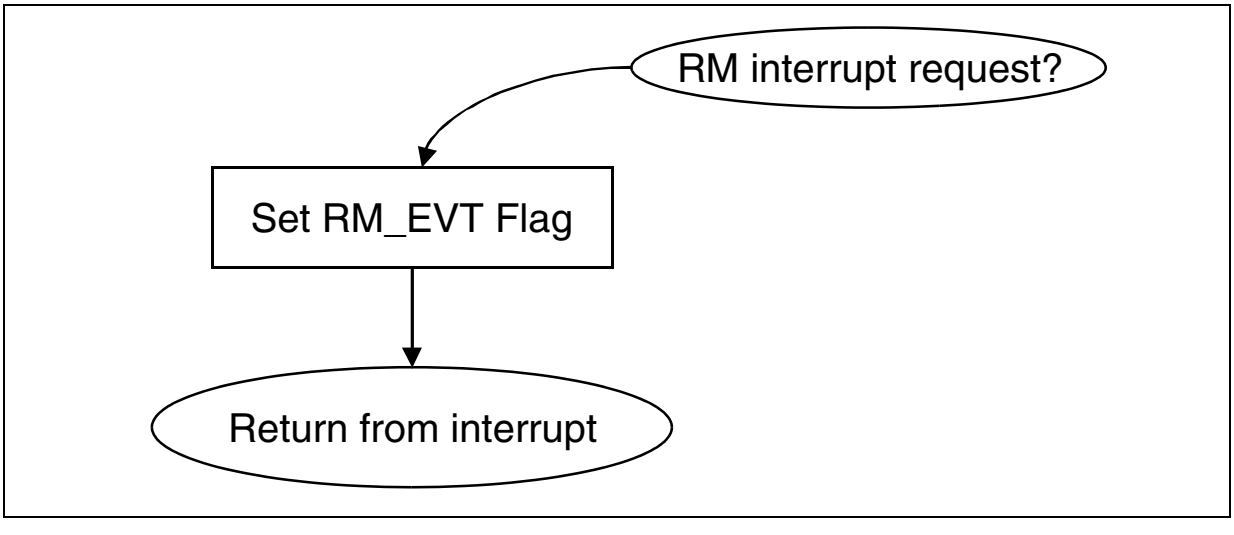

Figure 25. RM event processing (Sensor mode only)

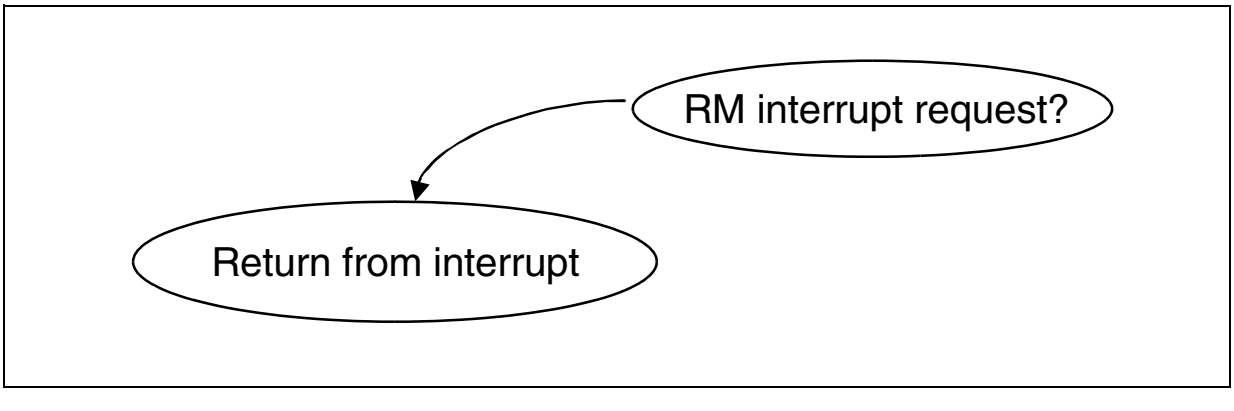

4.3 APPLICATION LAYER

The application layer is split into modules; each module comes with a set of routines dedicated to a peripheral, event (interrupt routines), or are grouped by functionality. The following information summarizes the most important routines in the different modules.

regul.c . . . . . page 45
adc.c . . . . . page 45
it_ST7MC.c . . . . . page 46
ports.c . . . . . page 47
LinSCI.c. . . . . page 48

4.3.1 regul.c

This module contains the code of the PI regulation loop, which is used for closed loop operation.

The '**u16 Period_To_Frequency(void)**' routine converts the Step_Z buffer information into frequency (the Step_Z buffer contains the time elapsed between 7 zero-crossing events -> corresponds to the time of six (6) steps period of the electrical frequency).

The '**u16 regul_PI(u16 Target_Freq)**' routine computes the PI output according to Ki, Kp, sampling time, and target electrical frequency. The returned value is a 10-bit long integer (0 to 1024).

4.3.2 adc.c

This module starts and initializes the analog to digital converter, and launches upon request a conversion on a channel. It is able to provide ready-to-use values to the upper software layer.

It was basically written to monitor signals that vary slowly, such as trimmers, since the returned results are averaged values of 8 successive conversions.

The '**u16 ADC_Get_10bits(u8 Channel)**' and '**u8 ADC_Get_8bits(u8 Channel)**' functions return the ADC result on the selected channel.

The '**u8 Get_RV1(void)**', '**u8 Get_RV2(void)**' and '**u8 Get_RV3(void)**' routines return the value read on the potentiometers connected to the MCU (RV1, RV2, RV3).

The '**BOOL Get_Temperature(void)**' returns a boolean. This function returns 'TRUE' if the voltage on the thermal resistor connected to channel AIN0 has reached the threshold level or if the voltage has not yet reached back the threshold level minus the hysteresis value after an overheat detection.

In order to set the temperature and hysteresis threshold, the 'NTC_THRESHOLD' and 'NTC_HYSTERIS' values can be adjusted in the adc.c file.

The '**BOOL Get_HVBus(void)**' returns a boolean. This function returns 'TRUE' if the voltage of the HVBUS connected to channel AIN1 has reached the threshold level or if the voltage has not yet returned to the threshold level minus the hysteresis value after an over-voltage detection.

In order to set the voltage and hysteresis threshold, the 'HVBUS_THRESHOLD' and 'HVBUS_HYSTERIS' values can be adjusted in the adc.c file.

4.3.3 it_ST7MC.c

This module contains all non-MTC related interrupt service routines. In the stand alone firmware, the timer B resource is the only one to be used. The output compare capability is used in order to decrease 2 different time bases, 10ms and 1ms (see 'Timer.c' file for the timer B registers configuration).

Basically, unless equal to 0, variables are decreased by one each timer B output compare interrupt event (every 10ms or 1ms for output compare 1 and 2 respectively). Therefore, a variable '**VAR**' is loaded with '**50**' in the main code and decreased by one every 10 ms, and will reach '**0**' after 500ms (490 to 500 ms if the initialization of '**VAR**' is done outside of the interrupt routine).

Figure 26. Time base Principle: Timer B output compare 1 interrupt every 10ms

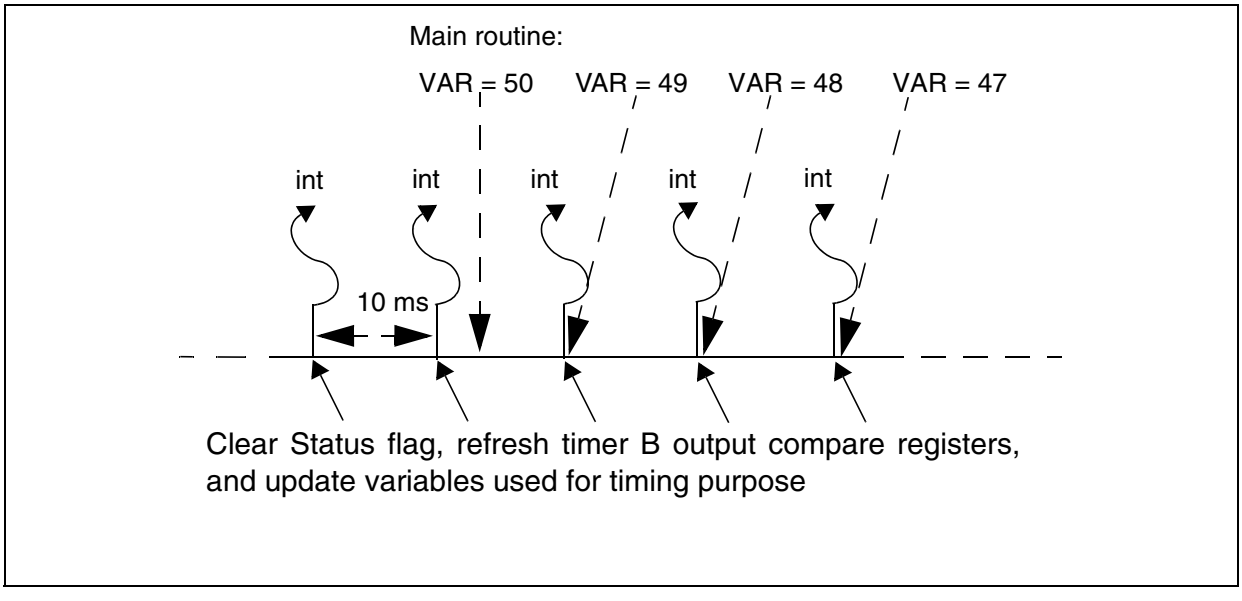

For more information regarding the configuration of this peripheral, please refer to the data sheet of the MCU, '16-bit timer' section.

4.3.4 ports.c

The purpose of the ports.c module is to centralize all information regarding the I/O ports (including the alternate functions) within the same file.

It is intended to clarify the sharing of I/Os between the peripherals and the functions requiring standard input/outputs, such as LEDs and push button reading.

I/Os are initialized at the beginning of the main program, using the '**void PORTS_Init(void)**' function. Two functions are handled by this module, needed when running the software library with the ST7MC starter kit hardware.

4.3.4.1 Push button reading

The function '**BOOL key_scan(void)**' returns a boolean, TRUE if the push button (connected to PC0) has been pushed during a minimum duration. This duration can be programmed in ms, to debounce the button reading. This timing is verified using **'it_ST7MC.c'** module resources, in **'void TIMB_Interrupt(void)'** interrupt routine.

The location of the push button (port and bit location) must be specified at the beginning of the ports.c file. The push button must be connected between ground and a pull-up resistor to get a low level on the input pin when it is pushed (refer to ST7MC starter kit schematics for details).

4.3.4.2 LEDs

A set of functions can be called to switch ON, OFF or toggle the two LEDs present on the starter kit: ***PORTS_RedLedOn***, ***PORTS_RedLedOff***, ***PORTS_RedLedToggle***, etc. It must be remembered that these two LEDs are powered using a single I/O (see schematics for details). Consequently:

– they cannot be turned ON simultaneously

– the I/O port state can be configured either as an output or as a floating input to switch OFF the LEDs.

4.3.5 spi.c

This module contains the code related to the SPI peripheral. The initialization of this peripheral is made within the '**void SPI_Init(void)**' function. Care should be taken when configuring the SPI interface in accordance with the system (particularly operating frequency and polarity). Communication with a serial EEPROM can be done using the '**Send_EEPROM(u8 address, u8 data)**' and '**Read_EEPROM(u8 address)**' routines.

4.3.6 LinSCI.c

This module contains the code related to the LINSCI serial communication interface and gives an example of configuration and usage (with the '**void SCI_Config(void)**' and '**void SCI_Send_Data(u8 data)**' routines) and the '**TTY_7.exe**' executable file. You can find the executable in the 'SCI' folder of the stand alone firmware. Working TTY Settings with the stand alone firmware are as follow:

- Baud Rate 38.4K, Data Bits 8, Parity none, Stop Bits 1, RTS/CTS enable, other options disabled.

When running the code in:

- Closed loop : the MCU feeds back respectively the rising, falling Bemf delay coefficients, integral, proportional coefficients, motor frequency (LSB then MSB), then '0' (decimal values).

- Open loop : the MCU feeds back respectively the rising, falling Bemf delay coefficients, the motor frequency (LSB then MSB), then '0', '0', '0' (decimal values).

Those settings can be changed in the '**main.c**' file, by modifying the values entered in the '**Lin_Tx_Buffer[0...7]**'.

Figure 27. Running TTY_7.exe on a PC (open loop firmware)

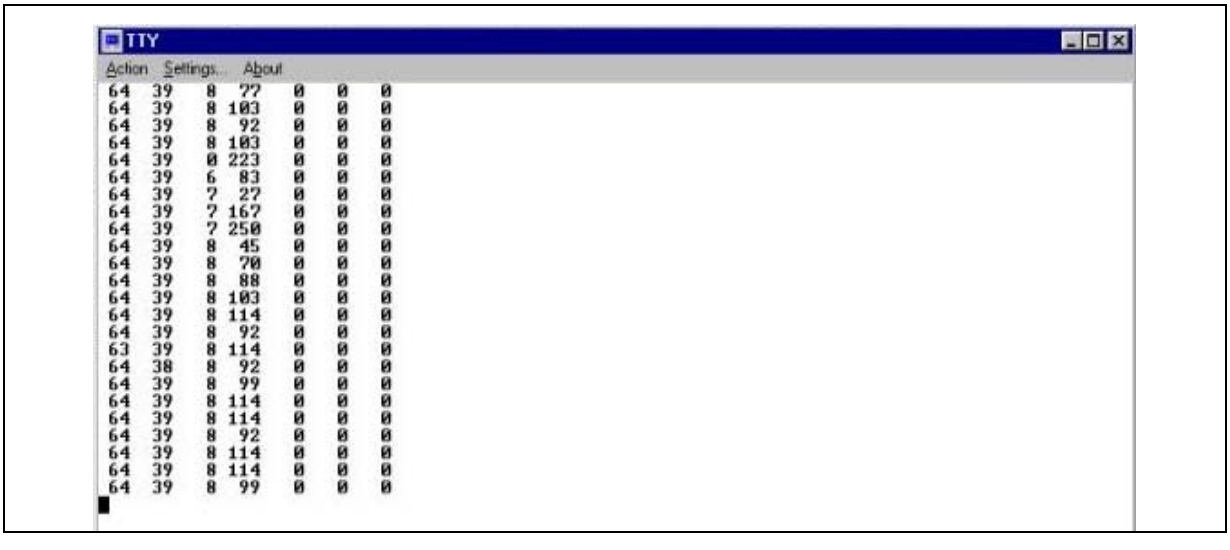

5 HOW TO DEFINE AND ADD A MODULE (STVD7 2.5.X)

This chapter describes how to define and declare a new module within the library. The example is based on the addition of 2 files: 'my_file.c' and the corresponding header file 'my_file.h'. Users of ***STVD7 3.x*** *can refer to* Section 2.3*.*

The first step is the creation of two new files. You can either copy and paste existing files and rename them, or click on the 'new files' icon and save it in the right format (*.c or *.h extension).

The new files containing the user code will generate a new 'my_file.o' object file that has to be declared in the toolchain configuration files.

5.1 COSMIC TOOLCHAIN

For COSMIC users, modifications have to be done in **BLDC_Cosmic.lkf** and **BLDC_Cosmic.mak** files.

In BLDC_COSMIC.lkf, the new object file has to be added to the main object file list (see Figure 28). However, if special options are required (for example, no optimization, or the forced placement of variables in memory), then it has to be declared in another section (e.g. after the main list) with the correct settings. See your C toolchain documentation for further details.

Figure 28. BLDC_COSMIC.lkf

```
# OBJECT FILES

..\..\object\cosmic\main.o
..\..\object\cosmic\LinSCI.o
.....
..\..\object\cosmic\my_file.o
```

In BLDC_Cosmic.mak, 'my_file.c' has to be added in the C source file list (see Figure 29) and the list of dependencies has to be updated accordingly (see Figure 30).

Figure 29. BLDC_Cosmic.mak, C source list

```
C_SRC = main.c \
    mtc.c \
    vector.c \
    opamp.c \
.....
my_file.c \
```

Figure 30. BLDC_Cosmic.mak, dependencies

```
# RULES FOR MAKING THE OBJECT FILES:
main.o: main.c version.h lib.h RAM_Sensorless.h
        $(CC) ..\..\source\main.c
.....
my_file.o: my_file.c my_file.h
        $(CC) ..\..\source\my_file.c
```

5.2 METROWERKS TOOLCHAIN

For METROWERKS users, modifications have to be done in **BLDC_Metrowerks.prm** and **BLDC_Metrowerks.mak** files; in BLDC_Metrowerks.prm the new object file has to be added in the 'Project module list' section (see Figure 31). In BLDC_Metrowerks.mak, the new source file and the corresponding dependencies have to be set in the 'Application Files' section (see Figure 32).

Figure 31. BLDC_Metrowerks.prm

```
/*** PROJECT MODULE LIST ***/

NAMES
        main.o
        ST7MC_hr.o+
        mtc_hr.o+
....
        my_file.o
        ansi.lib

END
```

Figure 32. BLDC_Metrowerks.mak

```
# ---------------------------- APPLICATION FILES -------------------------------
main.o : $(ENV) main.c version.h lib.h RAM_Sensorless.h
  $(CC) main.c

ST7MC_hr.o : $(ENV) ST7MC_hr.c ST7MC_hr.h mtc_hr.h version.h lib.h
  $(CC) ST7MC_hr.c
.....
my_file.o : $(ENV) my_file.c my_file.h
  $(CC) my_file.c
```

6 CODE EXAMPLE

This section gives a very simple code example. Once an action on the start button is detected, the motor starts and runs in open loop voltage sensorless mode with a duty cycle of 25%; once an action on the stop button is detected, an active brake procedure is engaged for 2 seconds with a duty cycle of 17%, then the power stage is switched off.

Warning: This code example assumes that correct settings have been entered for the alignment phase and ramp data. Modifications may be done using the Graphical User Interface provided with the demokit (by clicking on the ‘generate *.h files’ icon).

Figure 33. Code example

```
While(1)  // main loop
        {
//      if (Chk_Timer_WDG_Elapsed() == TRUE)WWD_Refresh();
        Chk_Power_Motor_Status();

        if ((u8)(GetMotorStatus() & FAULT_MSK) != 0) State = FAULT; // START_UP_FAILED
                                                                    // or MOTOR_STALLED
                                                                    // or HARD_FAILURE
                                                                    // or EMERGENCY_STOP?

        switch (State)
                {
                case IDLE:
                if (timer_10ms == 0) PORTS_RedLedOn(); // red LED back to normal after
                                        // overvoltage, overtemperature detection
                if (key_scan() == TRUE) State = START;
                break;

                case START:
                if (MTC_StartMotor() == TRUE) State = RUN;
                break;

                case RUN:
                if (GetMotorStatus() & AUTO_SWITCH)
                {
                       if (ValBit(Flag_MTC,SAMP_EVT))   // update PWM?
                       {
                              Falling_bemf = (u8)(Get_RV3());  // read RV3 & set falling
                                                               // Bemf coefficient accordingly
                              Rising_bemf = (u8)(Get_RV2());   // read RV2 & set rising Bemf
                                                               // coefficient accordingly

                              Set_Duty((u16)(PWM_FREQUENCY*25/100));   // 25% duty cycle
                       }
                }

                Chk_Motor_Stalled();
                if (timer_10ms == 0) PORTS_GreenLedOn();
                if (key_scan() == TRUE) State = BRAKE;
                break;

                case BRAKE:
                if (active_brake((PWM_FREQUENCY*17/100),2000) == TRUE) State = STOP;
                                                               // Brake_Duty = 17%
                break;

                case STOP:
                MTC_StopMotor();
                PORTS_RedLedOn();
                State = IDLE;
                break;

                case FAULT:
                        default:
                        MTC_StopMotor();
                       PORTS_RedLedOn();
                       if ((u8)(GetMotorStatus() & FAULT_MSK) == 0) State = IDLE;
                break;
                }

        }
```

7 PMDC (PMAC) MOTOR CONSIDERATIONS

7.1 PHYSICAL CONSIDERATIONS

7.1.1 Checking the number of pair poles of the motor

In most cases, there is an easy way to check how many pair poles are present with the motor you are working with. This applies only to motors from which you can observe any mechanical effect (by looking at the axis for example).

The trapezoidal driving method is based on 6 steps, and each step involves a particular low / high side driver configuration. 1 electrical cycle is then accomplished within 6 steps. The number of pair poles gives the link between electrical frequency and mechanical frequency:

mechanical frequency (hertz) = electrical frequency (hertz) / number of pair poles

Thus, by switching from one step to another at a very low frequency (e.g. 1Hz) and simply by controlling the mechanical effect by sight, we can determine the number of pole pairs by counting the number of steps within 1 mechanical cycle. It is given by:

number of pole pairs = total number of steps / 6

Example: assuming that 24 steps are needed to describe 1 mechanical cycle (e.g. 360 degrees on the axis of the motor), then the number of pole pairs is 24/6 = 4.

The software package includes a workspace containing a firmware example in order to drive the motor step by step at a frequency of 1Hz. You can open it in the '**Pair poles chk**' folder and open the dedicated workspace to your toolchain. This folder contains also a s19 file (in '**S19 file for EEPROMER**') so that you can program a MCU directly and avoid the use of an emulator. RV1 potentiometer is used to set the PWM duty cycle. The Start/Stop push button launches/stops the procedure.

Warning: Operations are made in voltage mode with a PWM frequency of 10Khz and duty cycle is set via RV1 potentiometer. Make sure that the duty cycle is not too high as the winding currents can increase very quickly in this particular mode of operation.

7.1.2 Connecting the sensor outputs to the board

Two configurations are commonly used: sensor 60 / sensor 120 degrees.

The easiest and most time-efficient solution is to connect the motor cables into the demokit by trying all the connection style combinations.

First you need to check which sensor distribution is used by connecting the sensor outputs to a scope and running the motor smoothly (by hand, for example). The consecutive events (in the time domain) have to be monitored (with a scope/multimeter): 3 successive rising/falling edges means a sensor 60 configuration, while an alternate rising/falling edge means a sensor 120 configuration.

Now that the sensor distribution is known, you have to randomly connect the sensor outputs to the demokit (select the right sensor configuration in the GUI). As there are 3 phases (let's say P1,P2 and P3), that simply means we have 6 possibilities of connection: P1P2P3, P1P3P2, P2P1P3, P2P3P1, P3P1P2 and P3P2P1.

For each connection, you may try to start the motor (with the GUI for example) and find out which 1 of the 6 cable connections is able to run the motor properly. If none of them is able to do so (wrong motor direction), then 2 sensor cables have to be swapped and the same procedure repeated.

Warning: Make sure that the duty cycle is not set too high as the winding currents can increase very quickly, especially if the motor is stalled.

7.2 CONTROL STRATEGY CONSIDERATIONS

7.2.1 Voltage versus current mode

The motor control peripheral of the ST7MC allows voltage and current control modes. Both modes set the PWM duty cycle according to:

- Voltage mode: the values of the MCPUH/L registers allow direct configuration of the duty cycle in accordance to the maximum allowed current thanks to the comparator cell (see Figure 34).

- Current mode: the current threshold that will turn the PWM into off-state (see Figure 35).

Figure 34. PWM duty cycle behaviour in voltage mode

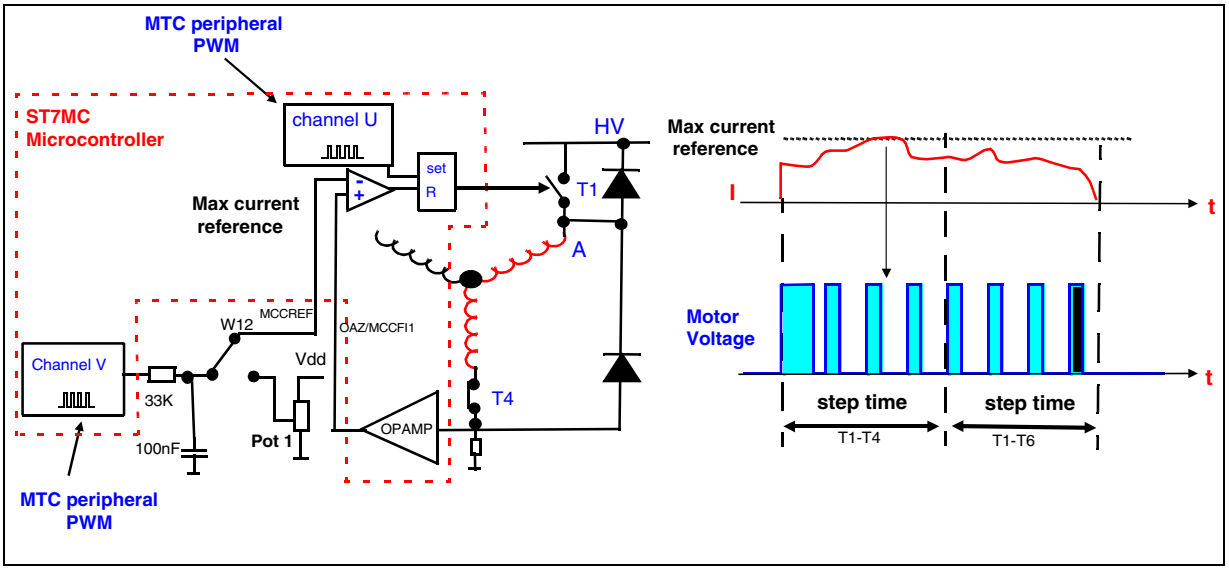

Figure 35. PWM duty cycle behaviour in current mode

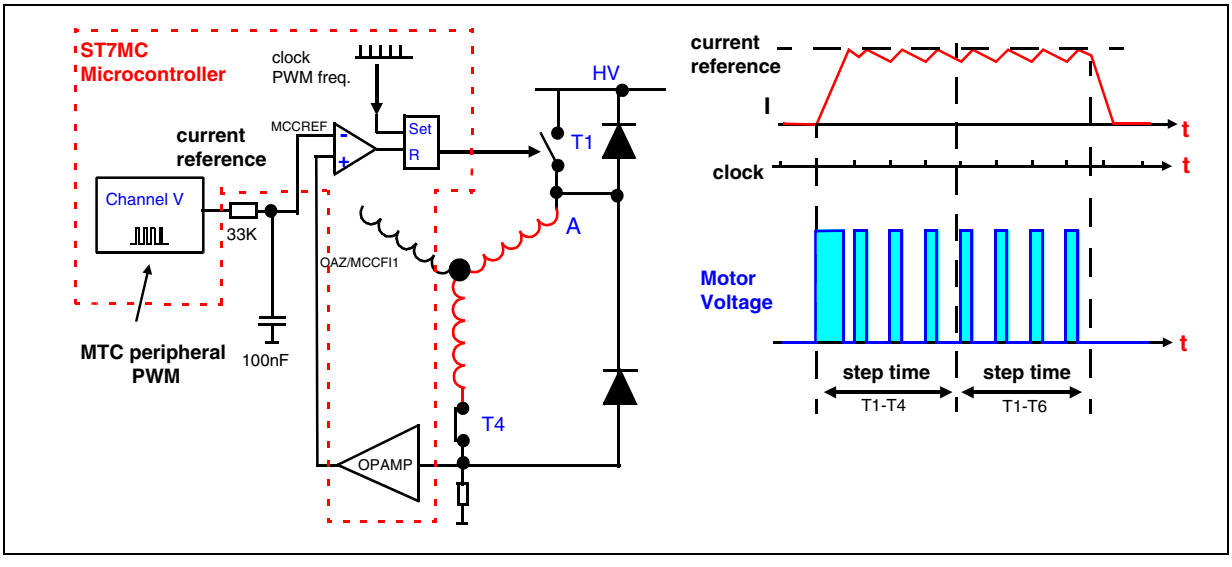

Basically, the current sense circuit acts as a PWM duty cycle manager in current mode while it acts as a maximum current limiter in voltage mode. The current loop allows a fine control of the torque by imposing the current in the windings.

Voltage mode can be used when there is a high torque variation.

7.2.2 Choosing a demagnetization type (Sensorless mode only)

There are 3 methods in sensorless mode to detect the end of demagnetization: software, hardware with software backup and hardware demagnetization (no demagnetization event in sensor mode).

A. Hardware

Detection of the end of demagnetization is entirely done by hardware and no safety precaution is taken in order to manage a wrong event detection. Hardware demagnetization can be chosen for system running at low speed. Generally, this method doesn't have any advantage compared to the 'Hardware with software backup', and therefore shouldn't be used.

B. Hardware with software backup

This method gives the advantage of an hardware detection combined with a software demagnetization used as a backup method when the system fails to detect the end of a demagnetization event. This allows the most accurate demagnetization time to be achieved and therefore permits the window timing to be opened for the Bemf detection as early as possible.

If there is a problem with the end of demagnetization event detection (which could occur on a falling Bemf event detection while running at high speed), then a software demagnetization occurs after a pre-programmed amount of time.

In the stand-alone library, the time is set to 125% of the last hardware demagnetization time (see 'mtc.c' file, '**MTC_C_D_IT**' routine).

Figure 36. Software backup demagnetization time update routine

```
{
    if (MotorStatus == AUTO_SWITCH)  temp_D = (u8)(MDREG - MCOMP); // Demag.time = MDREG - MCO
    else temp_D = MDREG;  // synchronous mode

         SoftDemagTime = (temp_D >> 2); // div/4
    SoftDemagTime += temp_D;  // next MDREG value = 1.25*(hard demag.time)
    RP_counter=0;//reset counter of RP event  coming between Dhard and next C

   ClrBit(Flag_it,RM_EVT);
    }
```

C.Software demagnetization

All demagnetization events are simulated and the end of the demagnetization occurs after a pre-programmed amount of time (see 'MTC_Settings_Sensorless.h' file, 'Setting of demagnetization time in running mode' section). The demagnetization time is an arbitrary value that has to adjusted according to the motor specifications; it has to be kept in mind that very inductive motors will require longer demagnetization time, and therefore will require longer step times. This solution might be preferred when the 'Hardware with software backup' demagnetization solution can't provide reliable motor operation.

7.2.3 The 4 Z event sampling methods (Sensorless)

Below is the description of the 4 sampling types that can be used for Z event detection while running motors in sensorless mode (for further information on these methods, refer to the application note AN1946).

Figure 37. Z event sampling methods as shown in the GUI

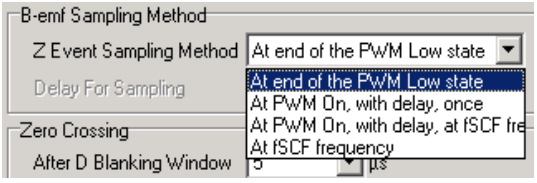

7.2.3.1 At the end of the PWM low state

This is the ST patented method; it provides very good sensitivity on the full speed range, without the usage of any external components. This solution requires an OFF time during each PWM period in order to detect the zero-crossing event (PWM low state). Samples are taken after a time window configured with ZWF[3:0] bits in MZFR register. Therefore the duty-cycle can't be set to its maximum. The maximum duty cycle will depend of the minimum PWM off time needed by the system in order to detect the Z event.

Figure 38. Sampling during OFF time, at PWM frequency

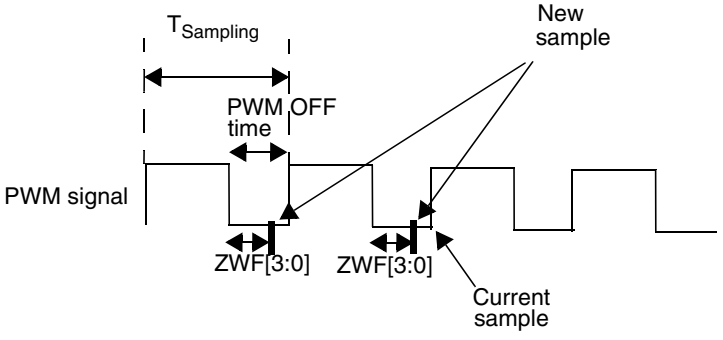

7.2.3.2 At PWM On, with delay once

This method requires additional external components (resistor dividers, with/without RC filtering). Samples are taken once, each PWM ON time, after a delay programmed by DS[3:0] bits in MCONF register. Duty cycle variation induces jitter on the sampling clock; if the system stability is affected, sampling should then be done at f_{SCF} frequency (see next section). True 100% duty cycle can be set.

Figure 39. Sampling during ON time, at PWM frequency

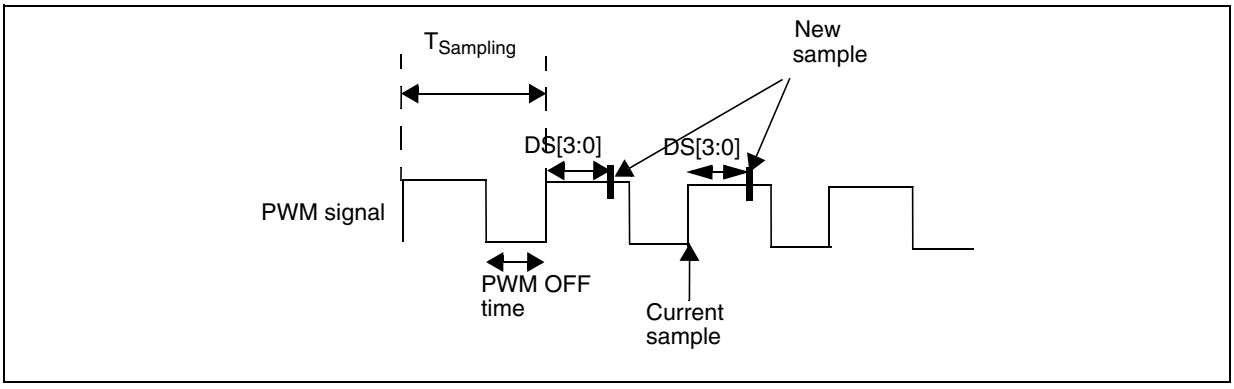

7.2.3.3 At PWM On, with delay, at f_{SCF} frequency

This method requires additional external components (resistor dividers, with/without RC filtering). Samples are taken at f_{SCF} frequency, during PWM ON time and after a delay programmed by DS[3:0] bits in MCONF register. True 100% duty cycle can be set.

Figure 40. Sampling during ON time at f_{SCF}

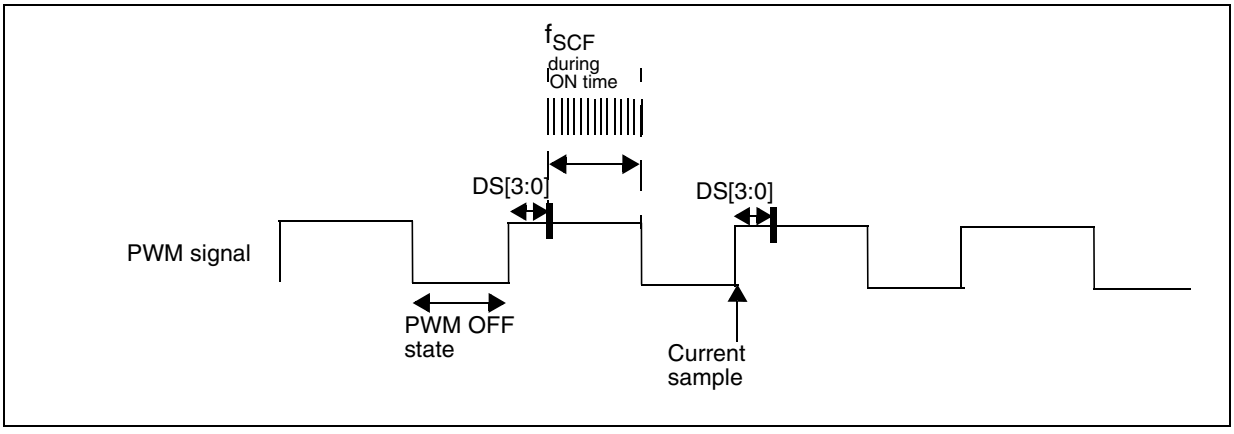

7.2.3.4 At f_{SCF} frequency

This method requires additional external components (resistor dividers, with/without RC filtering). The sampling is done at a programmable frequency independent of the PWM state. Samples are taken at f_{SCF} frequency. This type of sampling might be chosen when the motors are driven with Pulse Amplitude Modulation (PAM).

Figure 41. Sampling at f_{SCF}, Pulse Amplitude Modulation

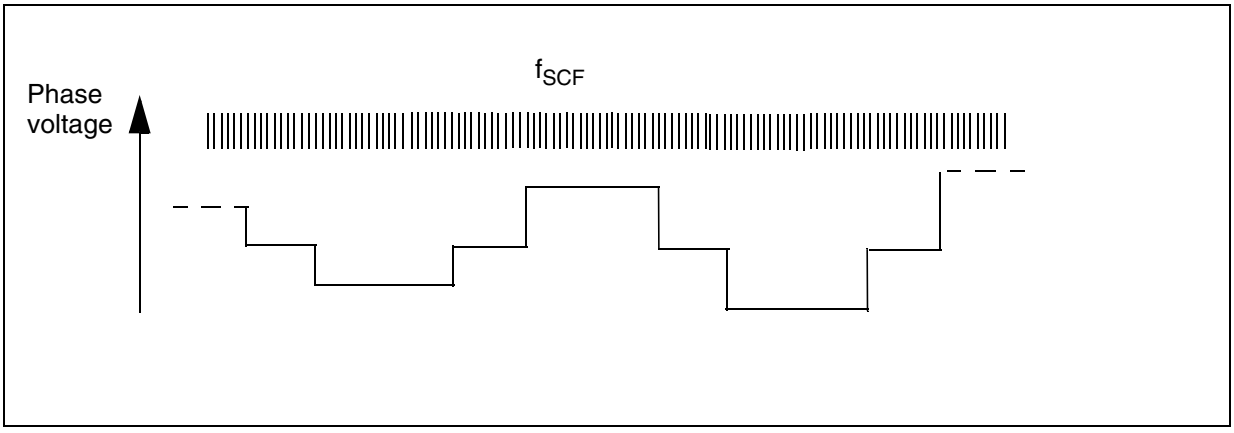

7.2.3.5 Conclusion

When setting up the system and unless working specifically in Pulse Amplitude Modulation, the easiest way to start is the ST patented method, providing a fast and effortless solution (no resistor dividers or RC filters to calculate). If the application requires a true 100% duty cycle (to bypass the speed limitation while sampling at end of the PWM low state), the sampling has then to be done during ON time, at PWM or f_{SCF} frequency.

7.2.4 Setting the PWM distribution

During each step, one can choose to apply the PWM signal on the low or the high side of the switches (1 of 3 IGBT/MOSFET legs). Even though this is not mandatory, it can greatly improve the system stability and efficiency.

Changing the PWM distribution can decrease the demagnetization time and can reduce reactive currents in motor windings (see Figures 44, 45 & 46).

Figure 42. Command sequence for 6-step mode

	Step					
Step number	Σ_1	Σ_2	Σ_3	Σ_4	Σ_5	Σ_6
Current direction	A to B	A to C	B to C	B to A	C to A	C to B
High	T0	T0	T2	T2	T4	T4
Low	T3	T5	T5	T1	T1	T3

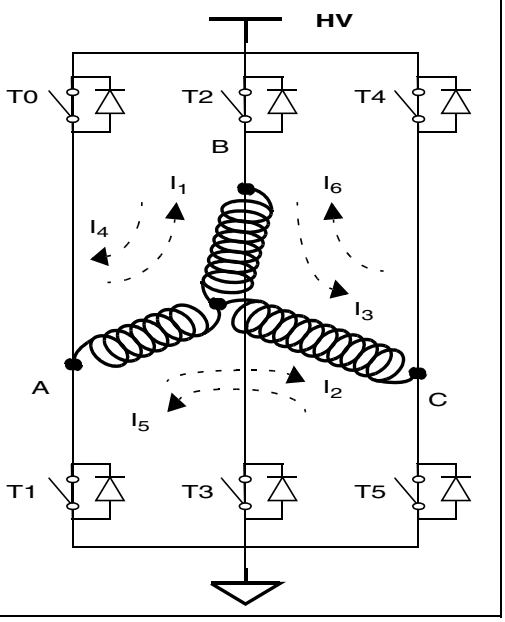

Figure 43. Voltage on phase B

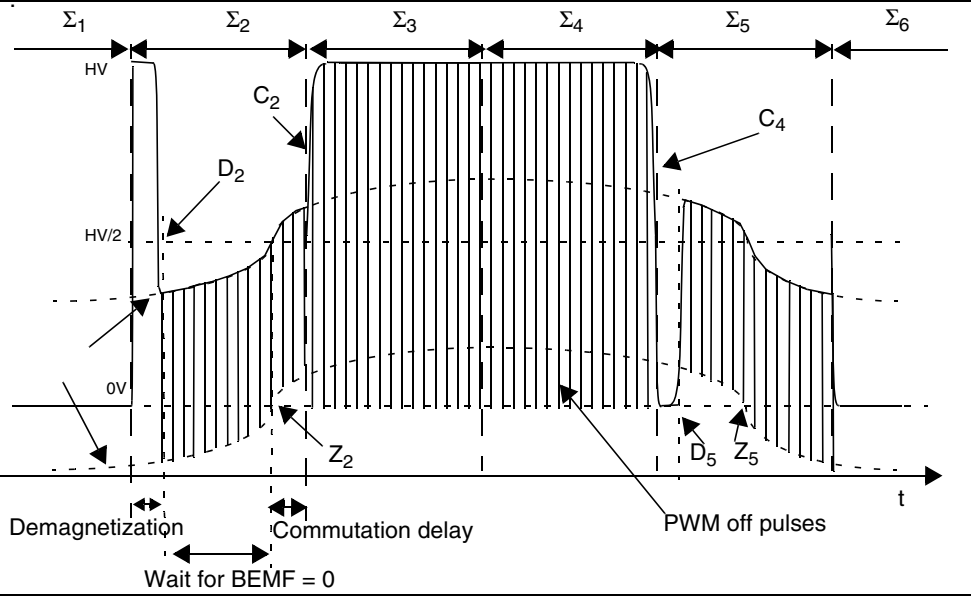

Figure 44. PWM applied on low/high side on a rising Bemf during demagnetizationf

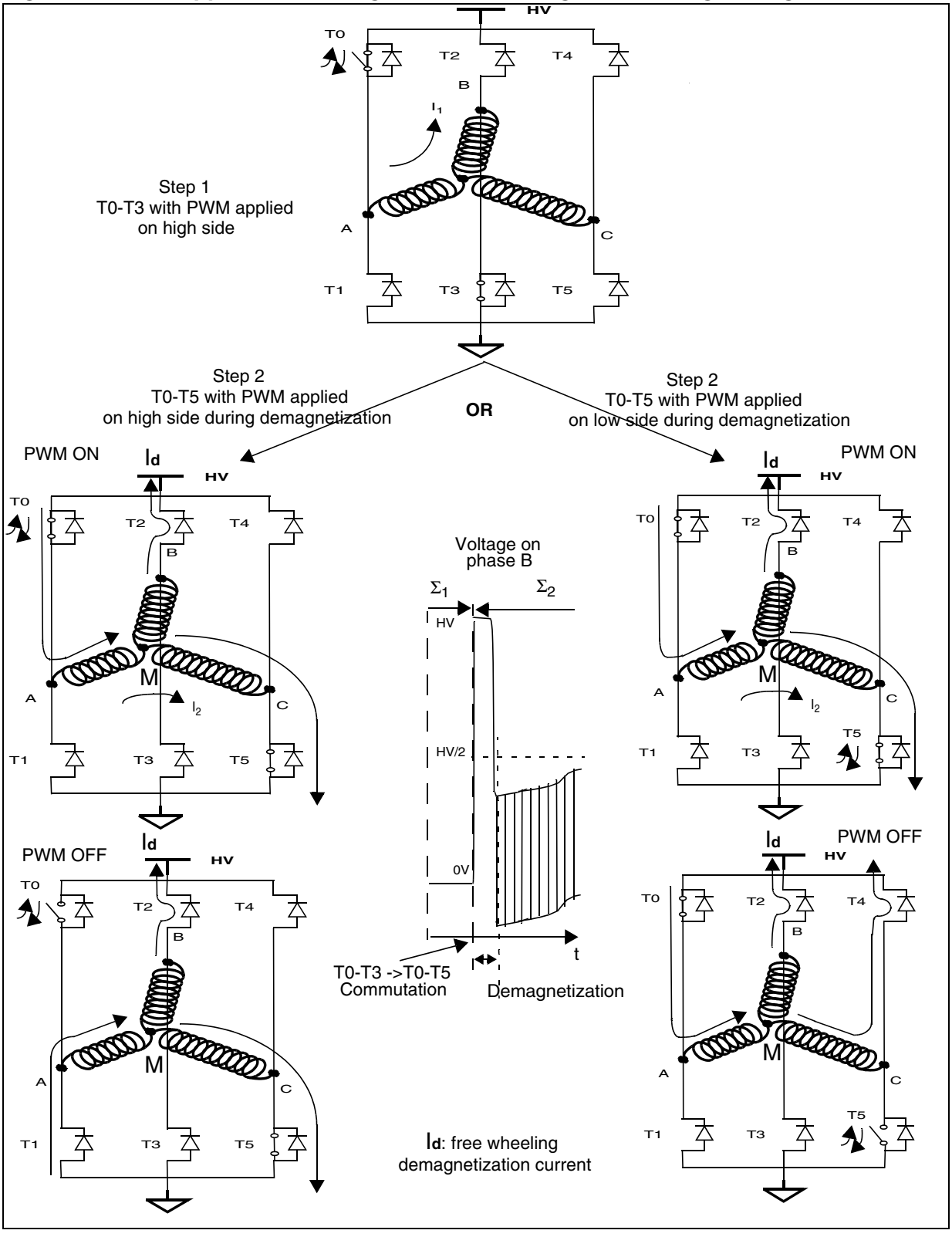

Figure 44 shows the freewheeling demagnetization current during the step 1 to step 2 transition. In order to minimize the demagnetization time in the freewheeling diode, it is easy to verify that the shortest time is achieved while lowering the M potential.

If the PWM is applied on high side, the M potential is either equal to 2 x HV/3 (PWM ON), or equal to HV/3 (PWM OFF). The voltage applied on the winding B (potential difference between B and M) is then doubled when the PWM switches from ON to OFF state.

If the PWM is applied on the low side, the M potential is either equal to 2 x HV/3 (PWM ON), or equal to HV (PWM OFF). The voltage applied on winding B switches from HV/3 to 0 (ON to OFF state). The demagnetization is effective only during the "ON" state of the PWM.

It is then better to apply the PWM on the high side during the step 2 demagnetization process (C to D event).

Figure 45. PWM applied on low/high side on a falling Bemf during demagnetizationf

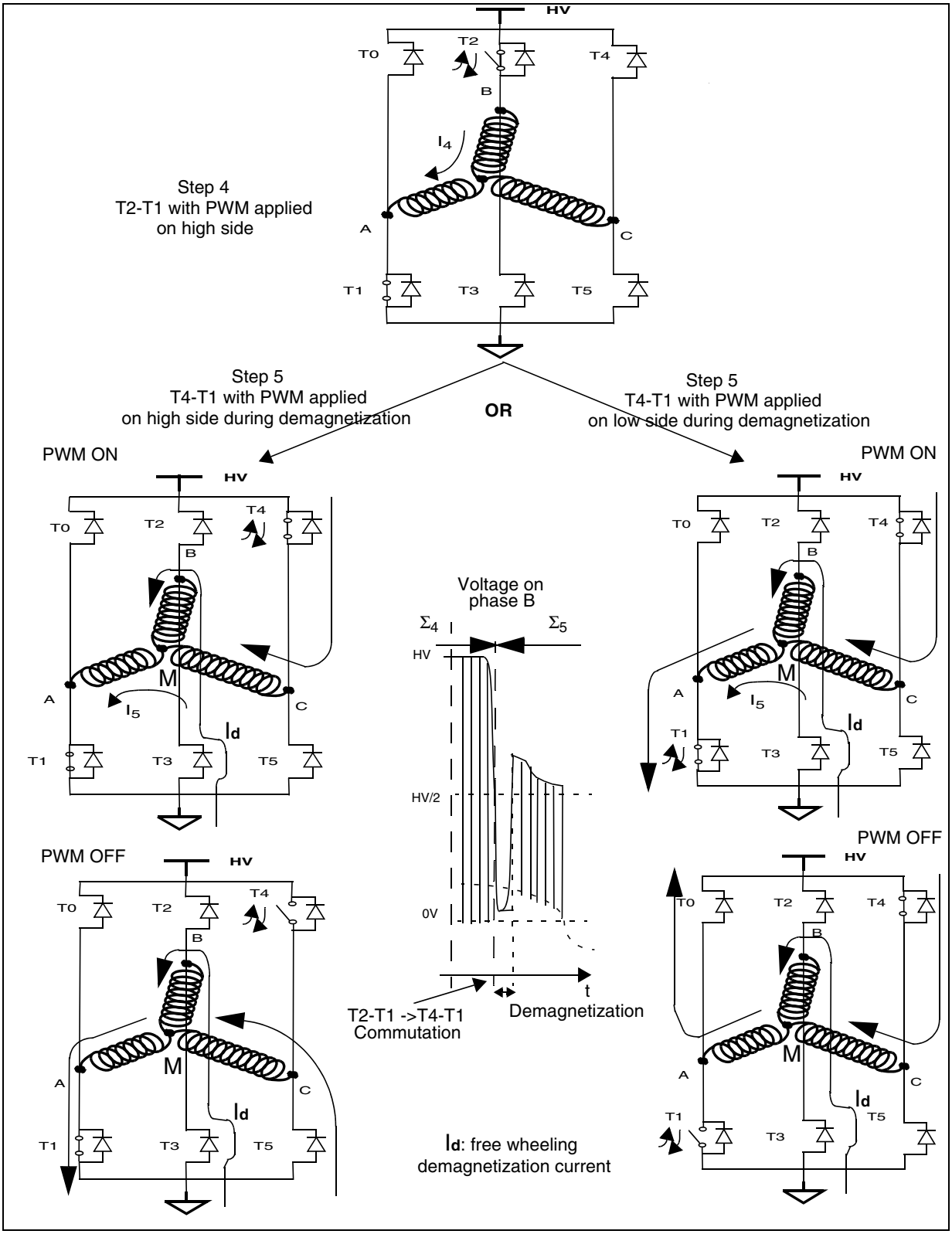

Figure 45 shows the freewheeling demagnetization current during the step 4 to step 5 transition. In order to minimize the demagnetization time in the freewheeling diode, it is easy to verify that the shortest time is achieved while raising the M potential.

If the PWM is applied on high side, the M potential is either equal to HV/3 (PWM ON), or equal to 0 (PWM OFF). The voltage applied on the winding B (potential difference between B and M) switches from HV/3 to 0 (ON to OFF state). The demagnetization is effective only during the "ON" state of the PWM.

If the PWM is applied on low side, the M potential is either equal to HV/3 (PWM ON), or equal to 2 x HV/3 (PWM OFF). The voltage applied on the winding B is then doubled when the PWM switches from ON to OFF state.

It is then better to apply the PWM on the low side during the step 5 demagnetization process (C to D event).

Figure 46. Comparison: reactive currents, highly inductive motor windings (sensor 120)

Case 1 : PWM applied on high side during step 2, low side during step 5
(All other steps: high side)

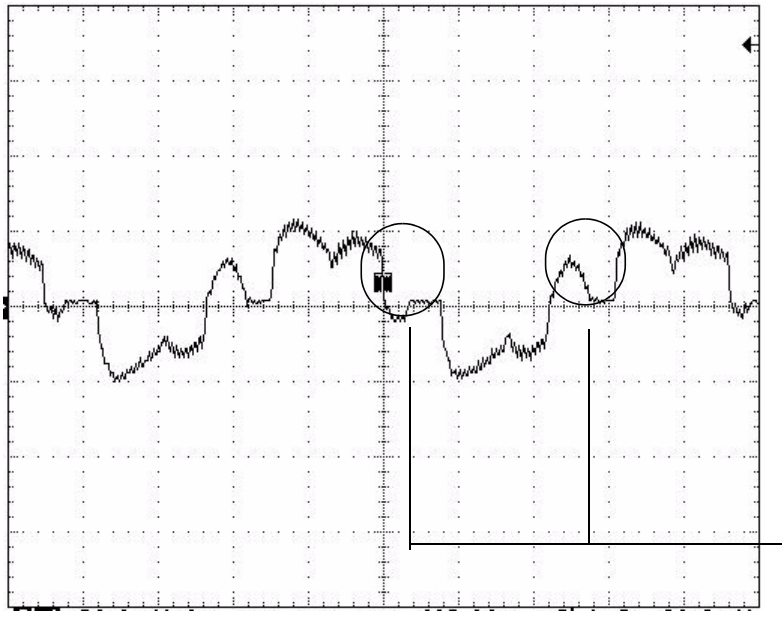

Case 2: PWM applied on low side during step 2, high side during step 5
(All other steps: high side)

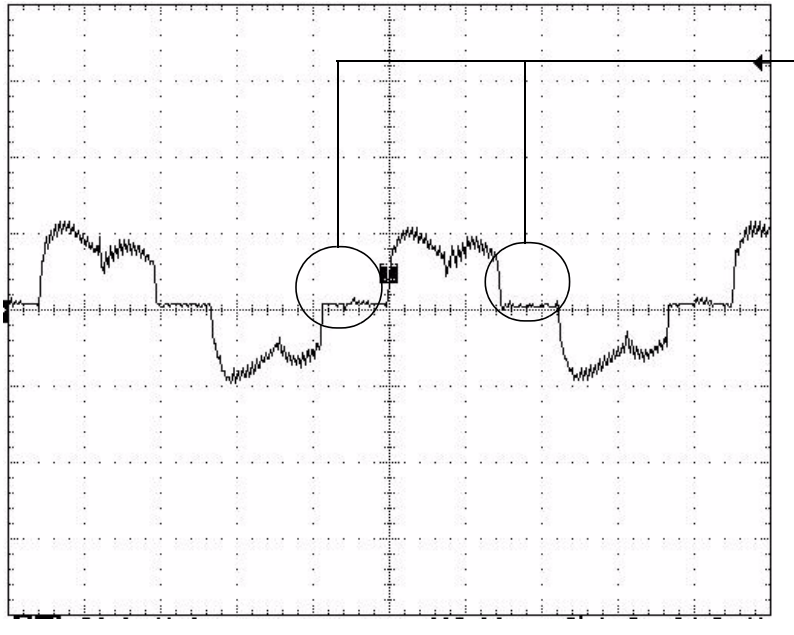

The reactive currents become negligible when PWM is applied on the appropriate switch

The ST7MC allows any kind of PWM configuration. Based on previous examples, one can see the choice to be made when accelerating any reactive or demagnetization current time. When using the ST patented method, it must be noted that the PWM signal has to be applied on the high side switch between D and Z events (Bemf sampling is done during Toff time).

To set the PWM distribution, click on 'Advanced Settings', then double-click on the dedicated configuration bits.

Figure 47. PWM distribution settings

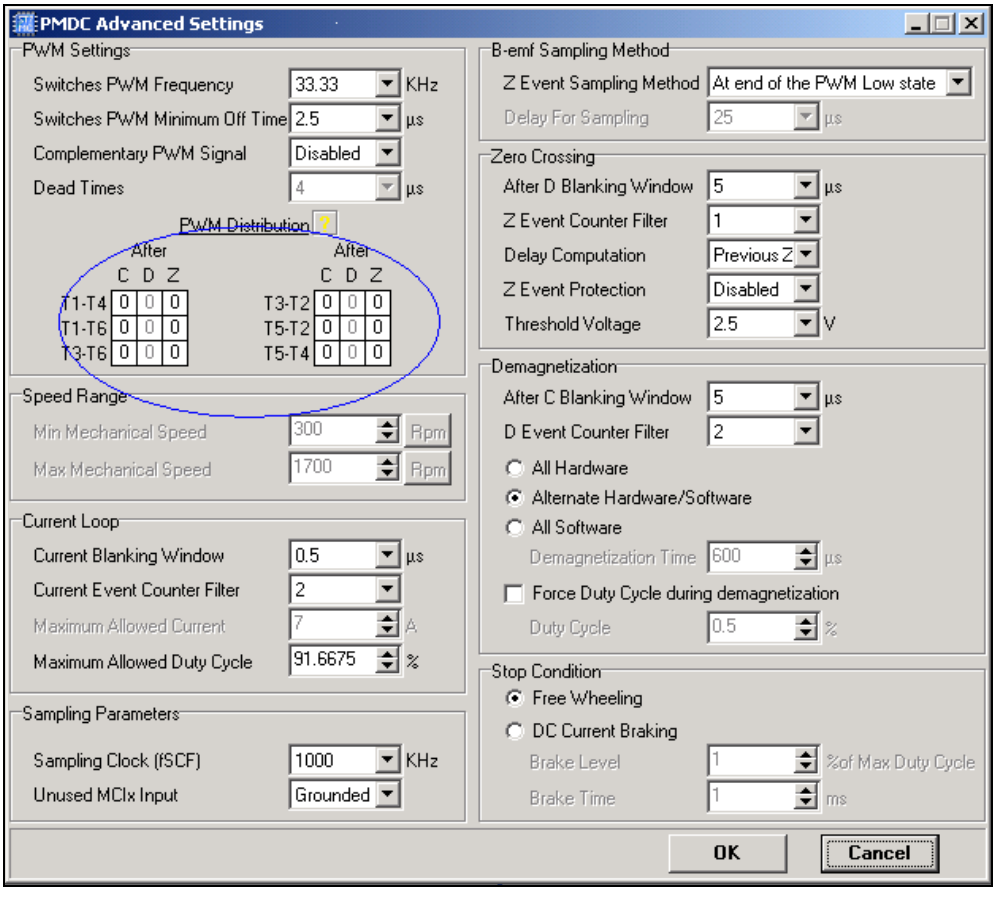

7.3 SOFTWARE SETTING CONSIDERATIONS

7.3.1 PI regulator implementation and tuning

PID regulator theory and tuning methods are subjects which have been extensively discussed in the technical literature. Here is a basic reminder of the theory and a proposal of the empirical tuning method.

■ *Theoretical background*

The implemented regulator is actually a Proportional Integral one (see note below regarding the differential term). The purpose of the regulation loop (see equation 1) is to adjust the PWM duty cycle on the motor winding depending on the frequency.

$$PWM_{Dutr} = f(freq) \quad (1)$$

$$PWM_{Dutr} = PWM_{Start} + K_p \times Error_{freq} + K_i \times \sum_t Error_{freq} \quad (2)$$

The equation 2 corresponds to a classical PI implementation, where:

– PWM_{start} is a constant corresponding to the duty cycle on the motor windings when the ST7MC switches from synchronous to autoswitch mode in sensorless (exit of the ramp). In sensor mode, this constant is set to 0, but can be manually adjusted. See 'Init_PI()' in 'regul.c' file for more details.

– K_p is the proportional coefficient,

– K_i is the integral coefficient.

The tuning and respective actions of these three parameters are discussed below.

Note: No differential correction is implemented in the current regulator. Practice shows that this term leads to increased noise in the regulation loop (high pass function). As a result, the system may become unstable or difficult to tune. Additional software filtering can be implemented to get proper differential frequency error, but may result in additional response delay.

■ *Regulation tuning procedure*

To tune the PI regulator parameters, it is advised to proceed in the following order:

– sampling time,

– proportional coefficient,

– integral coefficient.

■ *Adjusting the regulation sampling Time*

The sampling time needs to be modified to adjust the regulation bandwidth. As an accumulative term (the integral term) is used in the algorithm, increasing the loop time will decrease its effects (accumulation will be slower and the integral action on the output will be delayed). Inversely, decreasing the loop time will increase its effects (accumulation will be faster and the

integral action on the output will be increased). This is why this parameter has to be adjusted prior to setting-up the integral coefficient of the PI regulator.

In theory, the higher the sampling rate, the better the regulation. In practice, you must keep in mind that:

– the related CPU load will grow accordingly.

– In the stand alone library (sensor/sensorless), the speed information is based on a 6-step time. There's absolutely no need to have a sampling time lower than this duration (for example, electrical frequency at max speed = 100 Hz -> T_{6_steps} = 10ms).

– at high speed, in most cases, system inertia is such that the system response is slow: in these conditions there is no need to have a high sampling rate.

This parameter must be reported in the mtc.h file, in a specific define (50ms in the example here below):

```
#define SAMPLING_TIME    50        // 50ms
```

■ *Tuning the Proportional coefficient Kp*

This parameter K_p provides the instantaneous error correction and is independent from the sampling time value. The higher the K_p, the lower the speed error and the better the dynamic response. Nevertheless, a value too high will lead to instability (see Figure 48 for speed response vs K_p value).

Figure 48. Speed correction versus K_p value (with K_i =0)

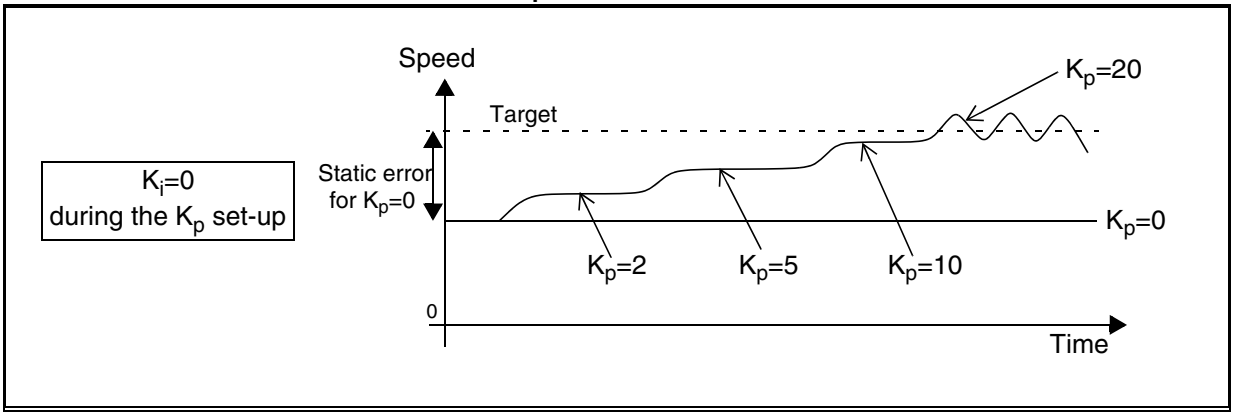

Here is an empirical method to tune the K_p coefficient:

– With K_i=0 and K_p=0, start the motor; this is corresponding to open loop drive.

– At a given speed, with some load, there will be an error respect to the target speed (so called static error); by slowly increasing the K_p value, the error will decrease.

– When the system becomes unstable (with oscillations), stop increasing K_p (this is $K_{p\ limit}$).

– The appropriate value of K_p to start working with will then be $K_p = K_{p\ limit} / 2$ (this is to provide a reasonable phase and gain margin).
– Confirm this result by trying several load conditions (if any) and slight speed variations to verify the system's dynamic response. The K_p can be slightly adjusted if necessary, keeping in mind that the final static error cancellation will be handled by the integral part of the PI regulator. The only important points to be validated are the lack of unstable behaviour over the whole working domain and a correct dynamic response (this last point will be further improved by the integral term action).
– Repeat the procedure for several speeds to scan the entire speed range of the application; for large speed ratios, it is most likely that several K_p values will have to be used to get the best results.

■ *Tuning the Integral coefficient Ki*

The parameter K_i provides the remaining static error cancellation over time.

In the current implementation, as mentioned above for sampling time set-up, the integral term effectiveness is linked to the time interval between two PI regulator executions. This is to decrease the PI execution time (it removes one run-time calculation). Consequently, when starting the parameter set-up, the sampling time T_s should be frozen; if it has to be modified after having tuned the K_i, the K_i parameter will have to be re-adjusted so that its influence remains constant.

The higher the K_i, the faster the speed error cancellation will be and the better the dynamic response. Nevertheless, a value too too high will lead to instability (see Figure 49 for speed response vs K_i value). During the set-up, Kp and Ts must be kept constant with the values determined below.

Figure 49. Speed error versus K_i

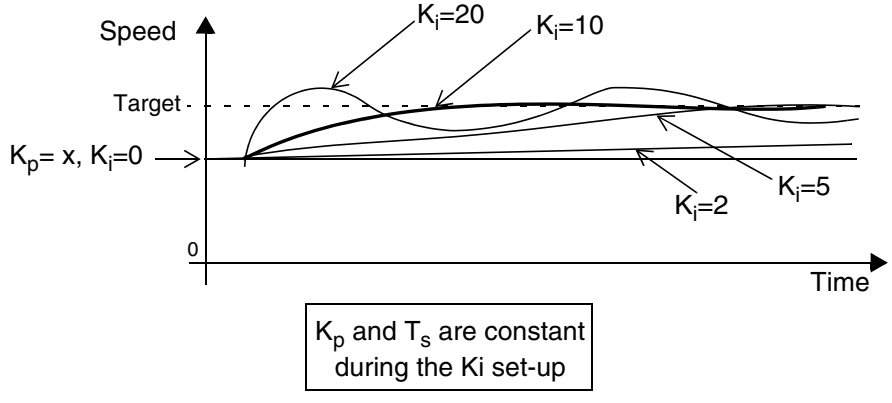

Here is an empirical method to tune the K_i coefficient:

– With K_i=0 and K_p=x and T_s=y, start the motor.
– At a given speed, with some load, there will be a static error with respect to the target speed; as soon as the K_i value will be different from zero, the error will start to decrease.
– Contrary to proportional term adjustment, you cannot slowly increase the Ki to evaluate properly its action: it is necessary to have dynamic conditions. This can be done by suddenly applying a given K_i coefficient (as represented on Figure 49). This can also be done by modifying the target speed or the load to verify that the speed settle time is correct and there's no or limited speed overshoot. A sharp variation as provided by dynamic brakes will represent the most difficult conditions and is usually not very representative of a real application. It is normally easier to work with the final application speed profile or load variations.
– When the system becomes unstable (big speed overshoot or with oscillations), stop increasing K_i (this is $K_{i\ limit}$).
– The appropriate value of K_i to start working with will then be $K_i = K_{i\ limit} / 2$ (this is to provide a reasonable phase and gain margin).
– Confirm this result by trying several load conditions (if any) and slight speed variations to verify the system's dynamic response. The K_i can be slightly adjusted if necessary to find the best trade-off between settle time and speed overshoot, keeping in mind that it is important to validate the lack of unstable behaviour over the whole working domain.
– Repeat the procedure for several speeds to scan the entire speed range of the application; for large speed ratios, it is most likely that several K_i values will have to be used to get the best results.

■ *Adjusting Ki and Kp vs the motor frequency*

Depending on the application and/or the speed range, it might be necessary, as seen in the previous sections, to use different values of K_p and K_i parameters depending on motor frequency.

These values will have to be reported in the code to feed the regulation loop algorithm. A function performing linear interpolation between four set-points (Set_Target_Electrical_Frequency) is provided as an example in the software library and can be used in most of the cases, as long as the coefficient values can be linearized (see Figure 7 on page 17 for details). On the contrary, a function with a larger number of set-points or a look-up table may be necessary.

When running the starter kit in standalone mode, the RS232 communication interface might be used using the 'tty_7.exe' windows program; this will allow the K_p and K_i values to be read directly on a PC; it is also possible to get the motor speed, the rising and the falling Bemf delay.

To enter the four set-points, some defines in the mtc.h file must be edited according to the collected parameters: (See 'Mtc_Settings_Sensorless.h' or 'Mtc_Settings_Sensor.h' for Min and Max frequency values)

```
//Fmin
#define Ki_Fmin      10
#define Kp_Fmin      30
..
//F_1
#define F_1             1000   // 100 Hz
#define Ki_F_1      20
#define Kp_F_1      10
..
//F_2
#define F_2             2000   // 200 Hz
#define Ki_F_2      50
#define Kp_F_2      40
..
//Fmax
#define Ki_Fmax      13
#define Kp_Fmax      18
```

- *Tricks and traps*
  - When tuning the PI parameters you should look for the worst case conditions, which may be when the load quickly and unpredictably varies, when the inertia is at a minimum, or when the mains voltage is maximum for an off-line application.
  - Frequency regulation output is a 10-bit variable. If the final application requires a different resolution (involving the PI routine to be rewritten), the output might be chosen as a power of 2 so that logical shift operations can be used as divisions (new duty = (max_duty x PI-output)>>10 for 10-bit returned value). This will result in compact code and will reduce the CPU time consumption while processing the PI output. To give sufficient accuracy to the control algorithm, the returned data should not be less than an 8-bit value, and shouldn't be greater than 12 bits long (the same resolution as the MTC cell PWM timer).
  - A regulation tuned in no-load condition (at the highest) will most probably be unresponsive in the final application, and vice versa: a regulation tuned in the application may become unstable in no-load conditions.
- *Implementing the closed loop regulation*

Below is an example of the use of this regulation process.

```
...
if (ValBit(Flag_MTC,SAMP_EVT))   // Sampling time elapsed? -> update PWM
        {
        ClrBit(Flag_MTC,SAMP_EVT);
        Set_Target_Electrical_Frequency((u16)(your_frequency));
        }
...
```

Note: Whatever the declared number of pair poles is, the '`Set_Target_Electrical_Frequency`' routine needs to be fed with an electrical frequency input. The 'Pole_Pair_Num' definition in 'MTC_Settings_Sensorless.h' or 'MTC_Settings_Sensor.h' file is just declared as a reference; it can be used for example in the final application in order to display the mechanical frequency instead of the electrical.

Figure 50. Closed loop PWM duty cycle control

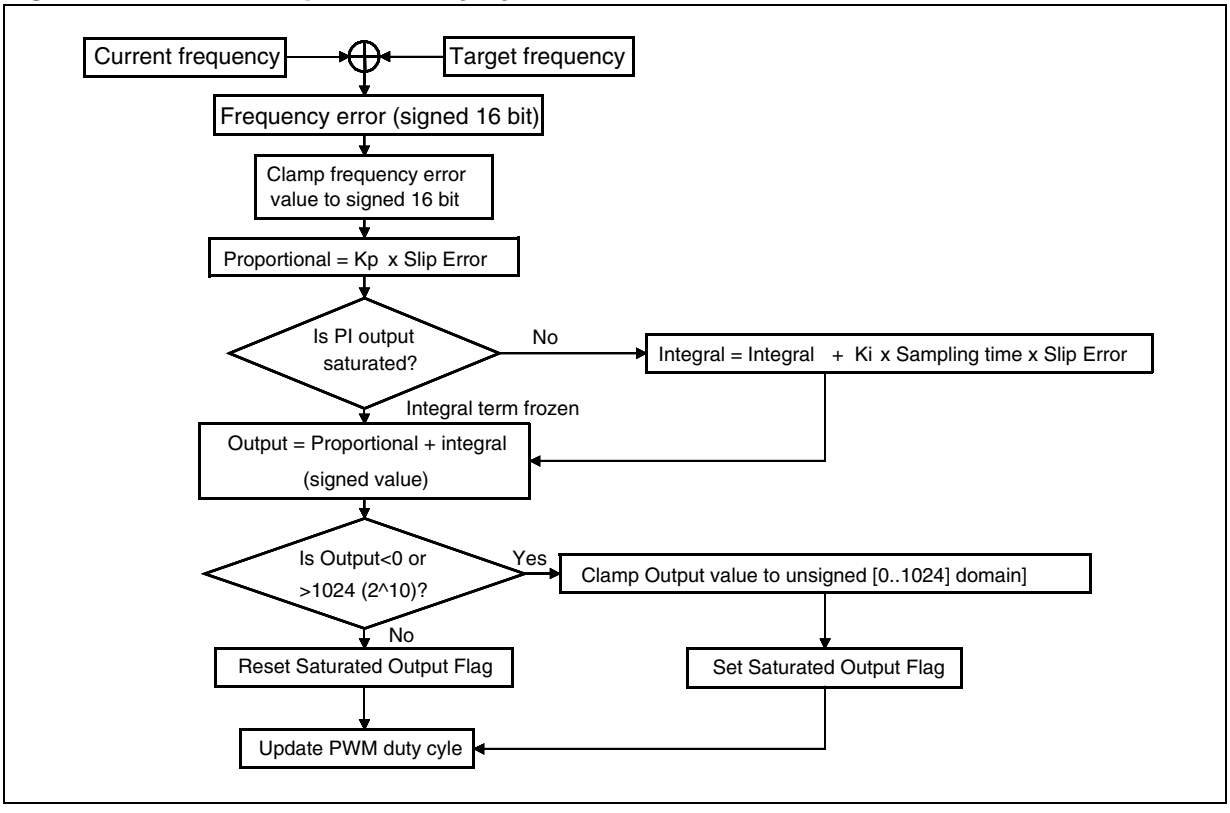

7.3.2 Adjusting falling/rising Bemf settings

Rising and falling Back-EMF coefficients allow the delay to be set up between a zero-crossing event (Z event) and the consecutive commutation event (C event). Once this ‘delay’ is elapsed, the PWM is applied on the next switch configuration (one of the 6 steps, T0-T3, T0-T5, etc.).

With the help of this setting, fine tuning of the commutation ‘mechanism’ is permitted: low coefficient values (early commutation) may make the system unstable, while high values may lower the maximum speed of the system.

In order to match any system, and especially when motor windings are not mounted entirely symmetrically, 2 delay coefficients can be adjusted: rising (respectively falling) delay associated with rising (respectively falling) Back-EMF voltage (to further reduce dissymmetrical winding effects, the sensorless method allows to choose the previous MZPRV or current MZREG value for delay computation).

It has to be noted that ‘rising’ and ‘falling’ definitions are meaningful only in sensorless mode. In sensor mode, the hall effect sensor outputs can be connected to the demokit in different ways, so the rising delay may then be associated to a falling-edge sensor output.

Generally, the delay coefficients have to be set in order to run the motor properly at a desired frequency, and used to balance the step times (equal time duration of the 6 steps, see Figure 51).

The final application layer could even allow greater flexibility (not implemented in the library): 6 independent delay coefficients (1 per step) in sensorless mode, or 3 delay coefficients in sensor mode (1 per sensor). This may be required especially when motor windings are strongly dissymmetrical or when the sensors are not set equally apart from each other (120 degrees in sensor 120 mode with 1 pair pole for example).

Figure 51. Current shape in a well-balanced system (current mode)

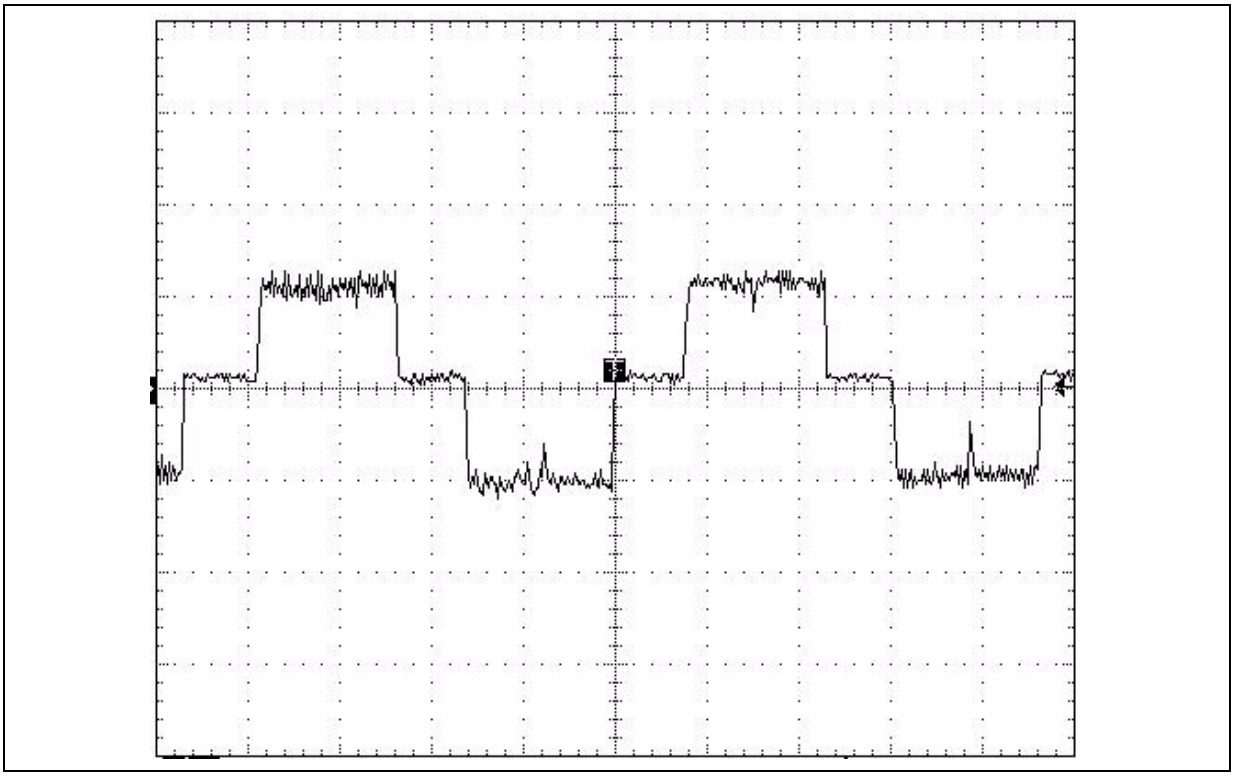

7.3.3 Completion of Fine Tuning and Other Software Considerations

If your motor works fine with the GUI, please refer to Section 3 GETTING STARTED WITH THE LIBRARY USING THE ST7MC-KIT/BLDC.

8 REVISION HISTORY

Table 1. Document revision history

Date	Revision	Changes
10-Jan-2005	1	Initial release
12-Jul-2007	2	Removed references to obsolete products

Please Read Carefully:

Information in this document is provided solely in connection with ST products. STMicroelectronics NV and its subsidiaries (“ST”) reserve the right to make changes, corrections, modifications or improvements, to this document, and the products and services described herein at any time, without notice.

All ST products are sold pursuant to ST’s terms and conditions of sale.

Purchasers are solely responsible for the choice, selection and use of the ST products and services described herein, and ST assumes no liability whatsoever relating to the choice, selection or use of the ST products and services described herein.

No license, express or implied, by estoppel or otherwise, to any intellectual property rights is granted under this document. If any part of this document refers to any third party products or services it shall not be deemed a license grant by ST for the use of such third party products or services, or any intellectual property contained therein or considered as a warranty covering the use in any manner whatsoever of such third party products or services or any intellectual property contained therein.

UNLESS OTHERWISE SET FORTH IN ST’S TERMS AND CONDITIONS OF SALE ST DISCLAIMS ANY EXPRESS OR IMPLIED WARRANTY WITH RESPECT TO THE USE AND/OR SALE OF ST PRODUCTS INCLUDING WITHOUT LIMITATION IMPLIED WARRANTIES OF MERCHANTABILITY, FITNESS FOR A PARTICULAR PURPOSE (AND THEIR EQUIVALENTS UNDER THE LAWS OF ANY JURISDICTION), OR INFRINGEMENT OF ANY PATENT, COPYRIGHT OR OTHER INTELLECTUAL PROPERTY RIGHT.

UNLESS EXPRESSLY APPROVED IN WRITING BY AN AUTHORIZED ST REPRESENTATIVE, ST PRODUCTS ARE NOT RECOMMENDED, AUTHORIZED OR WARRANTED FOR USE IN MILITARY, AIR CRAFT, SPACE, LIFE SAVING, OR LIFE SUSTAINING APPLICATIONS, NOR IN PRODUCTS OR SYSTEMS WHERE FAILURE OR MALFUNCTION MAY RESULT IN PERSONAL INJURY, DEATH, OR SEVERE PROPERTY OR ENVIRONMENTAL DAMAGE. ST PRODUCTS WHICH ARE NOT SPECIFIED AS "AUTOMOTIVE GRADE" MAY ONLY BE USED IN AUTOMOTIVE APPLICATIONS AT USER’S OWN RISK.

Resale of ST products with provisions different from the statements and/or technical features set forth in this document shall immediately void any warranty granted by ST for the ST product or service described herein and shall not create or extend in any manner whatsoever, any liability of ST.

ST and the ST logo are trademarks or registered trademarks of ST in various countries.

Information in this document supersedes and replaces all information previously supplied.

The ST logo is a registered trademark of STMicroelectronics. All other names are the property of their respective owners.

© 2007 STMicroelectronics - All rights reserved

STMicroelectronics group of companies

Australia - Belgium - Brazil - Canada - China - Czech Republic - Finland - France - Germany - Hong Kong - India - Israel - Italy - Japan - Malaysia - Malta - Morocco - Singapore - Spain - Sweden - Switzerland - United Kingdom - United States of America

www.st.com