Advantages of Solid-State Relays Over Electro-Mechanical Relays

1. Introduction

Many electronic designs can take advantage of the improved performance of solid-state relays (SSRs) relative to that of electro-mechanical relays (EMRs) that perform the same circuit function. The advantages of solid-state relays include the following:

- SSRs are typically smaller than EMRs, conserving valuable real estate in printed-circuit board applications
- SSRs offer improved system reliability because they have no moving parts or contacts to degrade
- SSRs provide state-of-the-art performance, including no requirement for driver electronics and bounce-free switching
- SSRs provide improved system life-cycle costs, including simplified designs with reduced power supply and heat dissipation requirements.
- SSRs can be provided as surface-mount technology (SMT) parts, which means lower cost and easier SMT printed-circuit board manufacture

This application note details the range of SSRs advantages over EMRs. It also includes references to IXYS IC Division; SSR part information; and design resources.

2. Applications of SSRs

Solid-state relays can be used to replace EMRs in many applications, including:

- Telecommunications:
  - I/O cards
  - Control panel exchanges
  - Antenna switches for UMTS
  - GSM base stations
  - Load switches
  - Radio base stations
  - Trunk switches
  - Subscriber line EMR replacement
  - Ground start
  - Loop current test
  - Test in/Test out
- Data Communications:
  - Embedded modem data access arrangement (DAA) circuits
  - PC modem discrete DAA circuits
  - Line switching in V.92 modems
- Industrial:
  - Metering output pulse relays
  - Multiplexers
  - Railway signalling
  - Decoder relays
  - Industrial control systems
  - Remote monitoring
  - Ground isolation
  - Programmable logic controller input multiplex relays
  - Programmable logic controller output relays
- Security Systems:
  - Alarm switches
  - Sensor switches

3. About IXYS IC Division's SSRs

OptoMOS® solid state relays use semiconductor technology to provide isolated small signal switching solutions. OptoMOS solid-state relays include three major circuit functions using four discrete semiconductor chips to achieve optimum performance. The input circuit contains one LED chip that converts input drive current to infrared light. The infrared light is optically coupled to a conversion circuit comprising an integrated array of photo-voltaic (PV) cells and associated drive circuitry. The PV cells generate the voltage needed to control the high voltage output MOSFETs that switch the output load.

The LED and PV chips are coupled through a translucent material that transfers light from one to the other without transferring heat or sacrificing isolation resistance. This optical dielectric material provides the electrical isolation.

IXYS IC Division's family of Line Card Access Switch (LCAS) products provide the necessary functionality to replace all 2-Form-C EMRs found on traditional voice and combined voice and data line cards in central office and access equipment. The basic functions for relays on a line card are line break, ringing injection, subscriber line test or test out, and circuit test or test in. All of these functions require the capability to handle high-voltage signals and withstand severe power cross and lightning tests. The LCAS products are monolithic ICs manufactured in the unique 320V BCDMOS process. The process is trench isolated and based on bonded thick film Silicon-On-Insulator (SOI).

IXYS IC Division's OptoMOS Solid-State Relays, AC Solid-State Switches, and LCAS products are provided in a wide variety of contact styles, blocking voltages, and current handling capabilities. Figure 1 shows a selection of high power SSRs with blocking voltages up to 1000 V and load currents up to 22.8 A.

Figure 1. IXYS IC Division Solid-State Relays

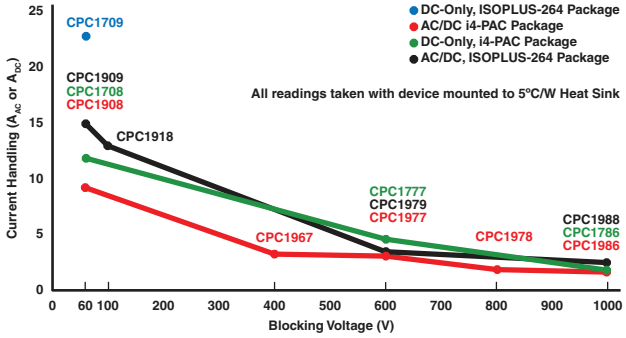

4. Specifying an SSR

4.1 The Tendency to Over-Specify

This section describes the tendency to over-specify EMRs. Over-specifying a component in a design results in a finished product that costs more than it should.

When designing with EMRs, the tendency to over-specify a part for a particular application results from two design concerns. In many cases, EMRs are over-specified for current handling capability because no lower-current unit is available. But most often, EMRs are over-specified to counteract the expected contact erosion over their useful lifetime. Contact erosion leads to higher contact resistance and the tendency for EMR contacts to weld closed, leaving the relay nonfunctional.

SSRs, on the other hand, can be specified with confidence at actual load voltages and currents. Contact erosion is not a concern because there are no contacts. SSRs are available with a wide range of current handling capabilities, ensuring a close fit with your design. See "Applications of SSRs" on page 2 for more information.

4.2 Maximum Switching Capacity and Derating

Figure 2. Relay Derating Curves

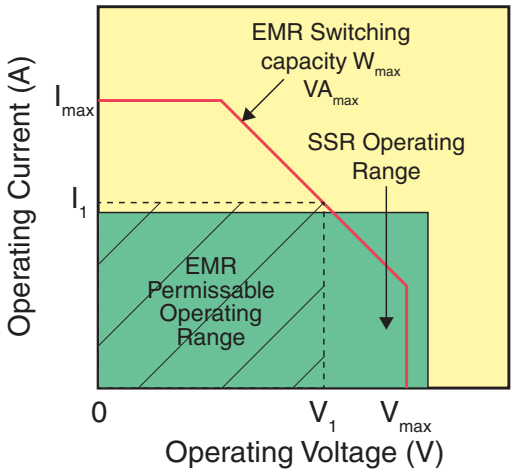

EMR manufacturers specify their relays in terms of maximum switching capacity. The maximum switching capacity (usually expressed in Volt-Amps or Watts) is provided in the relay data sheet. The data is given in chart form similar to Figure 2. The maximum switching capacity of EMRs substantially derates with regard to maximum voltage or current capabilities. In addition, relay users apply derating beyond the recommendations of the manufacturer in an effort to extend the contact life of the relay. Often this derating places the actual load that can be handled by an EMR within the operating range of an SSR. SSRs do not have contacts so no contact erosion derating is required. Maximum switching capacity deratings do not apply to SSRs.

5. Physical Size Advantages of SSRs

SSRs have a considerable size advantage over EMRs. In today's design environment, where printed-circuit board real estate is a very precious commodity, size matters more than ever.

The table "Physical Size Comparison of SSRs and EMRs" on page 4 shows a comparison of the physical size difference between SSR and EMRs in terms of printed-circuit board area consumed per pole. This information can be used to calculate the board space consumed by using an EMR solution compared to an SSR solution. In the case of analog line card design, where channel density is critical and available board space is limited, additional board area savings can

mean the difference between 16 or 32 channels per line card.

For example, a designer using the CPC7581MA can achieve a 43% reduction in printed-circuit board area used when compared with a fourth generation 2-Form-C EMR. The use of the LCAS also reduces the need for contact snubber circuits required for the EMR. In applications such as embedded modems in set top boxes, solid state relays like IXYS IC Division's CPC1035 consume only 16% of the board space of a comparable Reed relay solution.

Table 1: Physical Size Comparison of SSRs and EMRs

Part	Package	Number of Poles	Area per Pole (mm^2)
CPC7581BA LCAS	16 SOIC	4	54
CPC7582BA LCAS		6	27
CPC7583BA LCAS	28 SOIC	10	32
CPC7581MA LCAS	16 MLP	4	21
CPC7582MA LCAS		6	10.5
CPC7583MA LCAS	28 MLP	10	13
LCA110 OptoMOS	6-pin SMT	1	53
LAA110 OptoMOS	8-pin SMT	2	30.5
CPC1035 OptoMOS	4-pin SOP	1	16
Electromechanical Relays			
Reed relay	4-pin SIP	1	97
Surface-mount Reed relay	4-pin Gull	1	116
2 Form C EMR	3rd Generation	4	77
2 Form C EMR	4th Generation	4	36.5

Note that these figures do not take into account allowances that must be made for relay spacing in printed-circuit board designs. See “Circuit Noise Generation and Isolation” on page 5 and “Magnetic Interaction and Sensitivity” on page 4 for more information.

6. Printed-Circuit Board Advantages of SSRs

In printed-circuit board applications, SSRs have several distinct advantages over EMRs. These include:

- SSRs have no magnetic interaction
- SSRs do not generate electrical noise
- SSRs are more immune to physical shock and vibration
- SSRs do not generate and are not sensitive to electro-magnetic interference (EMI)
- In modern SMT printed-circuit board manufacture, SSRs have the advantage of IC-like handling

This section describes in detail the advantages of using SSRs in printed-circuit board designs.

6.1 Magnetic Interaction and Sensitivity

EMRs operate with magnetic fields. These fields are not confined to the relay, so interaction of magnetic fields between adjacent electro-magnetic components must be accounted for in printed-circuit board design.

Figure 3. EMR Spacing Requirements

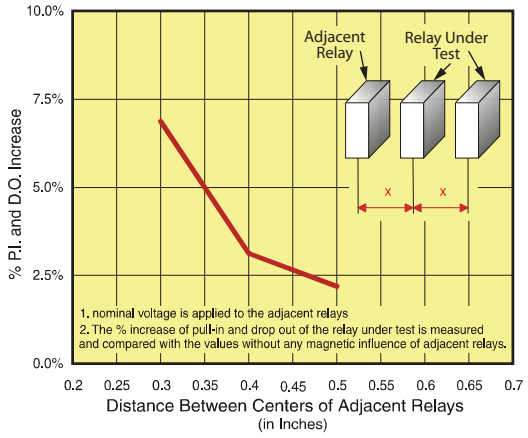

The interaction is described in the following statements found in EMR application material:

- Avoid use in locations subject to excessive magnetic particles or dust.
- Avoid use in a magnetic field (over 8,000 A/m).
- When planning to mount multiple relays side-by-side, observe the minimum mounting interval for each type of relay.

This interaction costs printed-circuit board real estate, typically 0.2 inches (5 mm) on all sides of an EMR, a hidden cost of using an EMR solution. Typical EMR

spacing requirements and the effects of EMR spacing on pull-in and drop-out voltages are shown in Figure 3.

Magnetic interaction is not present with SSRs because no magnetic field is used to switch the output.

6.2 Circuit Noise Generation and Isolation

As distinct from SSRs, EMRs generate electrical and audible noise that can be problematic in printed-circuit board applications. Consider the following statements found in EMR application materials:

- The relay can be a source of noise to a semiconductor circuit. This must be taken into consideration when designing the positioning of the relay and other semiconductor components on the PCB.
- Keep the relay and semiconductor components as far away as possible.
- Locate the surge suppressor for the relay coil as close to the relay as possible.
- Do not route wiring for audio signals that are likely to be affected by noise below the relay.
- Design the shortest possible trace pattern.
- One method for separating the power source and the relay from other electronic components is to use shielded trace patterns.

SSRs are integrated circuits. They are not a source of audible or electrical noise, and do not need special consideration for positioning on printed-circuit boards relative to other semiconductors.

6.3 Shock and Vibration

Compared to SSRs, EMRs are more susceptible to physical shock and vibration. Further, the orientation of the electromechanical relay relative to the shock or vibration must be considered in designs where physical movement is expected.

Ideally, EMRs must be mounted so that any shock or vibration is applied at right angles to the operating direction of the armature. When an EMR's coil is not energized, the shock resistivity and noise immunity are significantly affected by the mounting direction. EMRs typically have functional shock resistance of only 50 G, and functional vibration resistance of only 20 G.

Determining the orientation of the armature in an EMR package can be a complicating factor in designing with EMRs. Some manufacturers' relay armatures operate in different directions by 90 degrees, complicating a shock sensitive application where multiple relay sources may be used.

SSRs, by contrast, do not have moving parts and are not as sensitive to physical shock and vibration. Testing on IXYS IC Division SSRs has shown functional shock resistance up to 500Gs and a time duration of 0.5 milliseconds. Mounting orientation of SSRs has no bearing on shock resistance.

6.4 Manufacturing Implications

6.4.1 Mixed-Technology Costs

For SMT designs, using EMRs that require through-hole or manual placement can lead to higher costs related to the use of mixed technologies.

Manufacturing costs vary widely. Some manufacturers suggest a cost of $0.01 to $0.03 per SMT printed-circuit board component placement. Most IXYS IC Division SSRs are SMT products. Many EMRs, by contrast, are not SMT and require through-hole or manual placement in SMT designs. The same industry guideline suggests $0.05 to $0.15 per insertion or manual placement. Second-process hand soldering costs can be $0.15 to $1.00 per component.

Although it is often overlooked by designers who look at component cost instead of the total designed-in cost, incorporating SSRs in SMT designs can lead to considerable manufacturing savings.

6.4.2 Surface-mount EMR Limitations in Reflow Solder Processes

Although surface-mount EMRs can be used, SMT SSRs can be a better choice in reflow solder processes for several reasons.

EMRs, with their springs, armatures, solenoid coils, and air trapped in the package, are far more sensitive to the heat stresses involved in reflow solder processes. IXYS IC Division's OptoMOS SSRs, with no moving parts, are compatible with reflow solder process and can be wave soldered. IXYS IC Division recommends IPC9502 level 7 for solder process limits. Its OptoMOS SSRs can be mounted on either side of the PCB and immersed in molten solder for brief periods of time, and its LCAS is compatible with industry-standard soldering processes.

For small, lightweight components such as chip components, a self-alignment effect can be expected during printed-circuit board placement if small placement errors exist. However, this effect may not

occur for large electromechanical components such as EMRs. They require precise positioning on their soldering pads.

If SMT EMRs sustain excessive mechanical stress from the placement machine's pickup head, their performance cannot be guaranteed. Additionally, through-hole technology (THT) versions of EMRs almost always require manual placement. There is no general correlation between the location of the tips of the pins and the outside of the EMR case. In a typical through-hole technology IC, the leads are bent outward at a 5-10 degree angle. When the component is grasped by the head, the leads are flexed inward to match the hole separation and then inserted. Since EMRs are grasped by the case and not by the leads, they generally must be hand inserted. In addition, SMT EMRs are often the tallest component on the board. This can result in excess top cover heating and shadowing.

6.4.3 Reliability and Yields

Although difficult to quantify in hard numbers, the consensus in the industry is that the hand processing and soldering required for mixed-technology printed circuit board manufacture leads to lower manufacturing yields and lower mean-time-between-failure figures for manufactured products.

Consequently, using SSRs that do not require mixed-technology work processes can mean higher reliability and better yields.

7. Input to Output Isolation Advantages of SSRs

For applications that require high input to output isolation, like telephone line interface circuits, SSRs offer a better solution. This section contrasts SSR to EMR isolation characteristics.

IXYS IC Division OptoMOS SSRs are 100% tested for input-to-output breakdown voltage (IOBDV). The minimum rating is 1500 V_{rms} for 60 seconds (steady state) for 4-pin SSRs. The rest of the SSR product line is rated at either 3750 or 5,000 V_{rms} for 60 seconds.

With EMRs, the input to output isolation is most often referred to as insulation resistance. The term defines the resistance value between all isolated conducting sections of the relay. This value would include the isolation between the coil and the contacts, across the open contacts and from contact to any core or frame at ground potential. Due to the physical construction constraints (e.g. contact gap) and the material used, EMRs are generally rated at only 1000 V_{rms}.

8. Failure Modes

All electronic components have failure modes. EMRs, with their moving parts, contact surfaces, and wound coils, have generally higher failures-in-time relative to SSRs. Moreover, the reliability of SSRs related to the LED and optoisolator portions of the parts has been greatly improved in recent years.

8.1 Optocoupler “Wear”

In the past, the discrete and packaged optoelectronic devices used to perform isolation in SSRs have had problems associated either with manufacture or with drift of the electro-optical parameters over time. The problems led many to conclude the LED-based SSRs were suspect and subject to “wear” over time. Testing on the optical components used in IXYS IC Division SSRs, however, shows that the mean-time-between-failure (MTBF) of the LEDs is 290,875 hours, or 33.20 years, at a 90 percent confidence factor. Calculations are based on a nominal LED current of 10 mA.

Testing done on the photodetector showed orders of magnitude longer life expectancy, so the limiting factor of SSR optical component reliability is the LED.

8.2 EMR Contact Wear

The contacts are the most important components in an EMR in terms of reliability. Their characteristics are significantly affected by factors such as the material of the contacts, the voltage and current values applied to them, the type of load, operating frequency, atmosphere, contact arrangement, and contact bounce. If any of these values fails to satisfy a predetermined limit, problems such as metal degradation between contacts, contact welding, wear, or a rapid increase in contact resistance can occur.

Contact wear is dependent on load characteristics. Arcs are created during the make and break of loaded contacts. DC voltages are particularly bothersome, as there is no zero-crossing current point such as with an AC signal. As a result, once an arc has been established it is difficult to quench. The extent and duration of the arc can cause significant contact damage. The current at both the closing and opening time of the contact can greatly affect contact life.

DC loads present additional problems for EMRs, as the positive and negative sides of the contact do not alternate as in the case of an AC load. This results in material transfer in only one direction leading to a peak on one contact corresponding to a valley on the other. This can lead to changes in on-resistance, early failure, or contact sticking.

The table “Inrush Current by Load Type” on page 7 lists different types of loads, and the inrush current a relay will have to handle when switching these loads. In the case of reactive loads, the inrush current at the time of closing of the circuit can be great enough to cause substantial contact wear and, at some point, the contacts may weld. Due to these conditions, a relay contact protection circuit designed to protect the relay contacts is recommended by EMR manufacturers. The protection circuit adds cost to the EMR solution and consumes valuable printed-circuit board space that could be used for other product features.

Table 2: Inrush Current by Load Type

Type of Load	Inrush Current
Resistive	Steady state current
Motor	5 to 10 times the steady state current
Incandescent lamp	10 to 15 times the steady state current
Mercury lamp	Up to 3 times the steady state current
Sodium vapor lamp	1 to 3 times the steady state current
Capacitive	20 to 40 times the steady state current
Transformer	5 to 10 times the steady state current

Contacts can be shorted by welding in the presence of either high current or vibration, as in the case of vibration-induced cold welding of gold contacts.

Since SSRs do not have contacts, none of the EMR contact wear issues described above apply.

The absence of contacts and moving parts means that SSRs are not subject to arcing and do not wear out. Contacts on EMRs can be replaced on some larger relays but contact replacement is not practical in small-signal printed-circuit board EMRs.

8.3 Other EMR Failure Modes

Open and shorted coils can also be a mechanism for EMR failure. Shorted coils can occur if excessive heat melts the coil insulation. Open coils can be caused by over-voltage or over-current conditions applied to the coil.

The circuitry used to drive EMRs can cause open coil failures if the drive circuit itself fails or is subjected to transients. SSRs can be driven directly from logic circuits, so an intermediate drive circuit is not required.

AC load SSRs have the benefit of zero crossing switching which reduces noise in the circuit by restricting the switching operations to the point where the voltage crosses zero.

9. SSR Solutions to EMR Shortcomings

9.1 Contact Bounce and Arcing

The maximum bounce time of an EMR is the period from the first to the last closing or opening of a relay contact during the changeover to the other switching position. Bouncing causes short-term contact interruptions. Bounces are detrimental to contact life and are particularly bothersome in applications where relays are used for pulse counting. In such cases, bounce can easily lead to false pulse counting as contacts continue to make and break the circuit during bounce. Contact bounce does not occur in semiconductor-based SSRs. There are no contacts to bounce.

Typical applications where bouncing and arcing will give problems are data acquisition applications. With EMRs, some wait time must be built into the application to avoid measuring during contact bounce.

Contact bounce is also a problem in applications where voltage rises need to be counted, such as meters and counters. Contact bounces make false peaks, decreasing the reliability of the counter.

Figure 4. EMR Contact Bounce

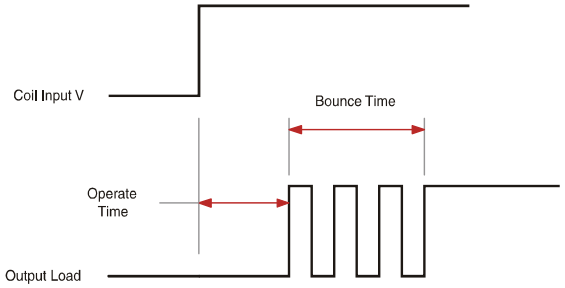

The relationship between operate time and contact bounce time in EMRs is shown in Figure 4. Operate time is defined as the time elapsed from the initial application of power to the coil until closure of the normally-open contacts. With multi-pole devices the measurement would be made when the last pole closes. Bounce time is not included in the operate time specification. A designer can reduce the operate time of the relay by overdriving the coil. While this may reduce the operate time, the added closure force might increase the bounce duration and number of bounces. Conversely, contact bounce can be reduced by applying less coil drive at the expense of operate time. Since every bounce switches the load on as well as off, the electrical life of the contacts will be significantly shortened. Contact bounce can be eliminated using external components as described in the following circuit.

Figure 5. Contact Bounce Circuit

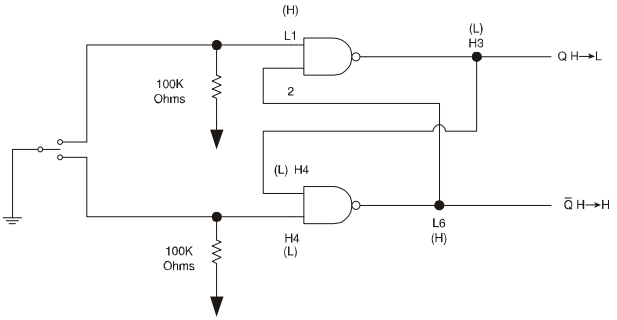

These components can add up to $0.25 to the cost of the EMR relay design, not including the printed-circuit board space consumed by the extra circuitry. Since SSRs use MOSFETs to switch the output load instead of movable contacts, bounce does not exist and no compensation circuit is necessary.

In EMRs, the contact bounce problem can be addressed using mercury-wetted contacts, but this may impose a restriction on mounting orientation relative to gravity. There are other considerations regarding the use or mercury-wetted contacts—the environment and the cost. Mercury is a hazardous material. Mercury wetted relays are no longer a practical solution for solving contact bounce. SSRs, by contrast, can be mounted and operated in any position and are much more environmentally friendly.

9.2 Electrical Life Expectancy

The maximum electrical life of an EMR is the maximum permissible number of switch operations at a specified contact load under specified conditions, with an operating reliability of 95%.

End-of-life is defined as the number of operations required to result in doubling of the rated contact resistance. Many EMR vendors extend this figure by specifying the rated contact resistance at 100 milliohms when actual value is closer to 15 milliohms. Electrical life is generally rated at 100,000 to 500,000 operations.

EMRs typically function reliably for only about 100,000 operations. Since EMR life is dependent on load characteristics, the only reliable way to determine the actual life of the relay is to test it in the circuit under actual load conditions. Double-pole relays may suffer failure when metallic powder shed from one set of contacts causes failure of the other contact, particularly for light loads and when loads are supplied by separate power sources.

SSR data sheets do not carry an electrical life specification like EMRs. Unlike the EMR, where life is dependent on actual switching load and number of cycles, SSR reliability is determined by time-in-operation, not number of switching cycles. When SSRs are used within the published specifications, MTBF can exceed 19 million hours.

9.3 Power Consumption

EMRs must energize a coil before switching can take place. This coil energy must be maintained in order to hold the contact in the desired position. Typically, the EMR will consume 80 mW of power to energize the coil. The situation is similar for the SSR, continuous current must be applied to the LED, but the power consumed is substantially lower, in the range of 3mW. Consequently, EMRs consume 25 times more power than SSRs. Lower power consumption means less heat to handle, an additional, often hidden, savings to designers. SSRs can be packed far more densely than EMRs, while producing less heat. The system power supply may also be smaller and less expensive.

While it is possible to use latching EMRs to overcome the constant power requirement, these types can be dislodged under either vibration, mechanical stress, or heat stress. This requires the designer to add circuitry to reset a latching EMR to a known state.

There are two cases where reset circuitry would be necessary; startup and after a short power interruption. These cases may need to be handled differently, adding cost and complexity to an EMR application.

9.4 Lower SSR Power Consumption

The power consumption of EMRs is higher than the pull-in power by a safety factor that takes into account wear phenomena, environmental influences, and manufacturing tolerances. In semiconductor switches, it is equal to the pull-in power, plus a safety margin, plus collector dissipation. The power consumption of semiconductor devices rises much more steeply in relation to the collector current than it does with EMRs in relation to contact current. For example, the minimum power requirement of a polarized EMR can exceeds 80 milliWatts, while SSRs consume roughly 3 milliWatts.

9.5 Lower SSR Voltage Requirements

Since an SSR does not have to either energize a coil or open contacts, less voltage is required to turn an SSR on or off. EMRs are controlled from power supplies ranging from 5 to 48 Vdc. SSRs, by contrast, can operate with supplies as low as 1.5 Vdc.

9.6 Direct Logic Operation

Because they do not consume much power and operate from low voltages, SSRs can be driven directly from logic circuits such as 74xxx types, saving a layer of interface electronics.

EMRs require coil drive voltages that far exceed the output drive of logic circuits. As a result, additional components are required to allow EMRs to interface with logic circuits. The circuit below shows the additional components required to integrate the mechanical relay into the digital circuitry. Four additional components are required in the EMR design to compensate for the unattractive characteristics of the EMR.

Figure 6. SSR and EMR Drive Circuit Comparison

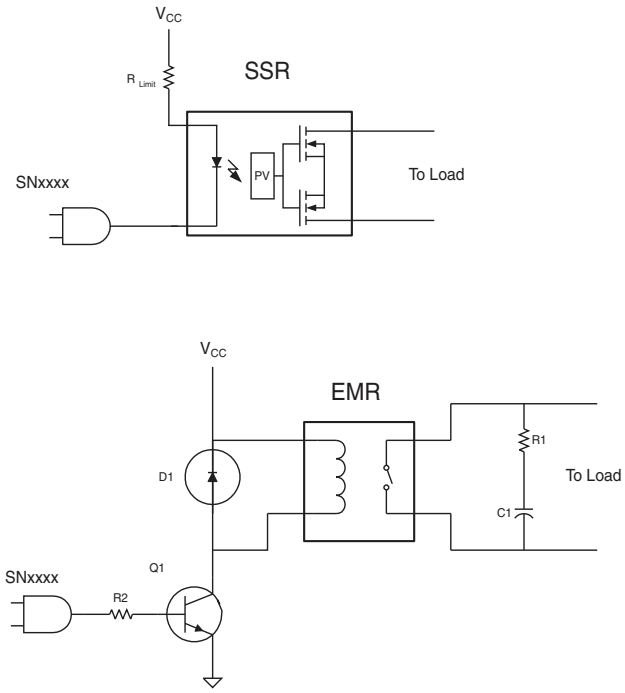

These disadvantages require engineers to use generally accepted design practices to compensate. With a coil at the input of all mechanical relays, there is a naturally occurring inductive spike when de-energizing the input. This spike is applied to the sensitive components used to control the operation of the EMR. The spike is usually enough to cause catastrophic damage to the control circuitry if it isn't properly suppressed. To eliminate this risk, a high-speed diode must be used across the coil.

In the circuit on the bottom of the diagram, with Q1 turned on by the logic gate, the EMR is activated with current flowing through the input coil. When Q1 is turned off to deactivate the relay, the resulting inductive spike is re-circulated and dissipated through the coil via the diode D1. In the SSR solution on the top of the diagram, notice that the coil is replaced with a simple LED and the protection diode and drive transistor are eliminated. The only addition to the circuit is the current limit resistor needed to set the current supplied to the LED.

10. True Costs of Lower EMR Reliability

In application, the lower reliability of EMRs leads to higher product life-cycle costs. This section describes the reliability advantages of SSRs over EMRs in terms of MTBF figures and the costs involved.

For purposes of comparison, MTBF figures were derived from the Telcordia Reliability Procedure for Electronic Equipment, **TR-332**.

Telcordia reliability prediction focuses on electronic equipment. It can provide predictions at the component level, system level, or project level for commercial off-the-shelf (COTS) parts. Telcordia utilizes three methods for predicting product reliability.

- I. Parts Count
- II. Parts count predictions with laboratory data in combination
- III.Predictions based on field data

IXYS IC Division uses both method I and method II to calculate product MTBF. In the following example, MTBF figures are derived using Method II with 1000 hours of actual life test at elevated temperature.

A meaningful relationship between reliability and cost can be established. With EMRs, field failures will occur, but the frequency of occurrence will be proportional to the demonstrated failure rates. The lowest failure rate will provide the lowest frequency of failure. The add-on cost of a relay can be calculated by amortizing the cost of the anticipated failures over the number required that will be used within their rated life cycles. The example in table 3 compares a single pole EMR with a single pole SSR (LCA110).

The life expectancy of the EMR, according to the electrical life chart on the datasheet, is 900,000 operations. Given this data, cycling 100 relays under the load conditions given in the table for 900,000 cycles, would produce one failure. Reliability for the SSR is not defined by the number of switching cycles but rather the total operational time. As a result, the switching cycles the SSR can withstand are essentially unlimited. For this example, five million cycles was selected for the sake of comparison.

The failure rate per 10K operations can be calculated. In this example, the procurement cost of the relays is equal and the cost-of-failure is $100. Cost-of-failure can be determined for equipment that is subject to field repair, but may be more difficult to assess if intangibles like lost future business due to customer dissatisfaction are factored into the total. Given the quantity and number of cycles required for the application, it is simple to calculate the add-on-cost of the relay.

The use factor multiplied by the add-on-cost yields the adjusted add-on cost. This total reflects the additional cost per relay that can be directly attributed to the lower reliability of the EMR solution. Add the adjusted add-on cost to the original purchase price of the relay to determine the adjusted actual cost of the relay. Multiplying this by the total number of relays purchased and subtracting the aggregate purchase price yields the total additional cost associated with the lower reliability relay. This cost can be borne by the customer or by the manufacturer depending upon the make up of the failure cost and any service agreements that may be in place for the end equipment.

Table 3: Life Expectancy Cost Advantage for SSRs

Cost Factor	EMR	LCA110 SSR
Life expectancy at 250 V, 120 mA, resistive load, number of cycles	900,000	5,000,000
Number of Failures	1	0
Failure rate per 10,000 cycles	0.01%	0.00%
Original procurement cost	$0.50	$0.50
Failure cost	$100.00	$100.00
Expected use, number of cycles	100,000	100,000
Add-on cost (failure cost x failures per operation x number of cycles)	$1.00	$0.00
Use factor (total use life / total life expectancy)	11%	2%
Adjusted add-on cost (Use factor x add-on cost)	$0.11	$0.00
Adjusted actual cost (purchase price + add-on cost)	$0.61	$0.50
Cost of use for 100,000 units (adjusted actual cost x number units purchased)	$61,111.11	$50,000.00
Reliability cost advantage of SSR solution		$11,111.11

11. Understanding Relay Reliability Comparisons

For EMRs, it is the mechanical switching action and associated contact degradation that determines wear and failure. MTBF is a less valid figure-of-merit for EMRs because the number of switching cycles determines the life of the part to a large extent.

SSRs, on the other hand, do not have moving parts or contacts to wear. The number of switching cycles has no bearing on SSR failure, but the total energized operating time does figure into MTBF.

For a given EMR application, the following MTBF equation applies when the duty cycle is known:
MTBF = cycle life/cycles per hour

For SSR applications, base MTBF is weighted by the on-time of the application, and given as:
MTBF = 100%MTBF/Duty Cycle

For example, for an application with a 50 percent duty cycle, MTBF figures based on 100 percent on-time would double. For purposes of comparing reliability, the following equation can be used:
EMR cycle life/(cycles per hour = 100% SSR MTBF/ duty cycle

By way of a real-world comparison, an EMR switching 3600 cycles-per-hour with a duty cycle of 10 percent would need to reach 698,400,000,000 cycles to match the MTBF numbers of IXYS IC Division's LCA110 SSR.

12. Conclusion

This application note has shown the superiority of solid-state relays to electro-mechanical relays in a number of areas. To summarize, SSRs have the following distinct advantage over EMRs.

- Lower cost-of-use
- Direct logic operation
- Lower power consumption
- Lower operating voltages
- Higher reliability
- Longer electrical life expectancy
- Higher input-to-output isolation
- No contact bounce or arcing
- Physically smaller
- Lower shock and vibration sensitivity
- No magnetic field or electrical noise generation
- Easier to use in SMT PCB manufacture

13. IXYS IC Division Design Resources

www.ixysic.com has a wealth of information useful for designing with IXYS IC Division products, including application notes and reference designs. Product data sheets also contain additional application and design information. See the web site for the following items:

Solid-state Relays

Line-card Access Switch Products

Master Product Selector

Solid-state Relay Parametric Selector

Application Note, AN-100, Designing Surge and Power Fault Protection Circuits for Subscriber Line Interfaces

Application Note, AN-108 Current Limited Solid-State Relays

Application Note, AN-144 Impulse Noise Benefits of Line Card Access Switches

13.1 Third Party Design Resources

More information useful for SSR designs.

Engineer's Relay Handbook, Fifth Edition, National Association of Relay Manufacturers, Milwaukee, Wisconsin, USA, 1996.

For additional information please visit our website at: www.ixysic.com

IXYS Integrated Circuits Division makes no representations or warranties with respect to the accuracy or completeness of the contents of this publication and reserves the right to make changes to specifications and product descriptions at any time without notice. Neither circuit patent licenses nor indemnity are expressed or implied. Except as set forth in IXYS Integrated Circuits Division's Standard Terms and Conditions of Sale, IXYS Integrated Circuits Division assumes no liability whatsoever, and disclaims any express or implied warranty, relating to its products including, but not limited to, the implied warranty of merchantability, fitness for a particular purpose, or infringement of any intellectual property right.

The products described in this document are not designed, intended, authorized or warranted for use as components in systems intended for surgical implant into the body, or in other applications intended to support or sustain life, or where malfunction of IXYS Integrated Circuits Division's product may result in direct physical harm, injury, or death to a person or severe property or environmental damage. IXYS Integrated Circuits Division reserves the right to discontinue or make changes to its products at any time without notice.

Specification: AN-145-R03
©Copyright 2014, IXYS Integrated Circuits Division
OptoMOS® is a registered trademark of IXYS Integrated Circuits Division
All rights reserved. Printed in USA.
4/21/2014