AMX24-MFT-T N4 Technical Data Sheet

NEMA 4X, Modulating Control, Non-Spring Return, Direct Coupled, 24 V, Multi-Function Technology®



Torque min. 180 in-lb, for control of damper surfaces up to 45 sq. ft.

Application

For proportional modulation of dampers in HVAC systems. Actuator sizing should be done in accordance with the damper manufacturer's specifications. The actuator is mounted directly to a damper shaft up to ¾" in diameter by means of its universal clamp. The default parameters for 2 to 10 VDC applications of the …MFT actuator are assigned during manufacturing. If necessary, custom versions of the actuators can be ordered. The parameters can be changed by two means: pre-set and custom configurations from Belimo or on-site configurations using the Belimo PC-Tool software.

Operation

The actuator is not provided with and does not require any limit switches, but is electronically protected against overload. The anti-rotation strap supplied with the actuator will prevent lateral movement.

The AMX24-MFT-T N4 provides 95° of rotation and a visual indicator indicates position of the actuator. When reaching the damper or actuator end position, the actuator automatically stops. The gears can be manually disengaged with a button on the actuator cover.

The AMX24-MFT-T N4 actuator uses a brushless DC motor, which is controlled by an Application Specific Integrated Circuit (ASIC). The ASIC monitors and controls the actuator's rotation and provides a digital rotation sensing (DRS) function to prevent damage to the actuator in a stall condition. Power consumption is reduced in holding mode.

Add-on auxiliary switches or feedback potentiometers are easily fastened directly onto the actuator body for signaling and switching functions.

For low ambient temperatures, the optional supplemental (-H) Heater add-on is available.

Technical Data	
Power Supply	24 VAC, ±20%, 50/60 Hz, 24 VDC, ±10%
Power consumption in operation	3.5 W
Power consumption in rest position	1.25 W
Transformer sizing	6 VA (class 2 power source)
Shaft Diameter	9/16...3/4" round
Electrical Connection	Screw terminal (for 26 to 14 GA wire), 1/2" conduit connector
Overload Protection	electronic throughout 0...95° rotation
Operating Range	2...10 V (default), 4...20 mA w/ ZG-R01 (500 Ω, 1/4 W resistor), variable (VDC, on/off, floating point)
Operating range Y variable	Start point 0.5...30 V End point 2.5...32 V
Input Impedance	100 kΩ for 2...10 V (0.1 mA), 500 Ω for 4...20 mA, 1500 Ω for PWM, On/Off and Floating point
Position Feedback	2...10 V, Max. 0.5 mA, VDC variable
Angle of rotation	Max. 95°, adjustable with mechanical stop
Torque motor	180 in-lb [20 Nm]
Direction of motion motor	selectable with switch 0/1
Position indication	pointer
Manual override	external push button
Running Time (Motor)	150 s
Ambient humidity	max. 95% r.H., non-condensing
Ambient temperature	-22...122°F [-30...50°C]
Storage temperature	-40...176°F [-40...80°C]
Degree of Protection	IP66/67, NEMA 4X, UL Enclosure Type 4X
Housing material	UL94-5VA
Agency Listing	cULus acc. to UL60730-1A/-2-14, CAN/CSA E60730-1, CSA C22.2 No 24-93, CE acc. to 89/336/EC
Noise level, motor	45 dB(A)
Servicing	maintenance-free
Quality Standard	ISO 9001
Weight	3.7 lb [1.7 kg]

†Rated Impulse Voltage 800V, Type action 1, Control Pollution Degree 3.

Dimensions (Inches[mm])

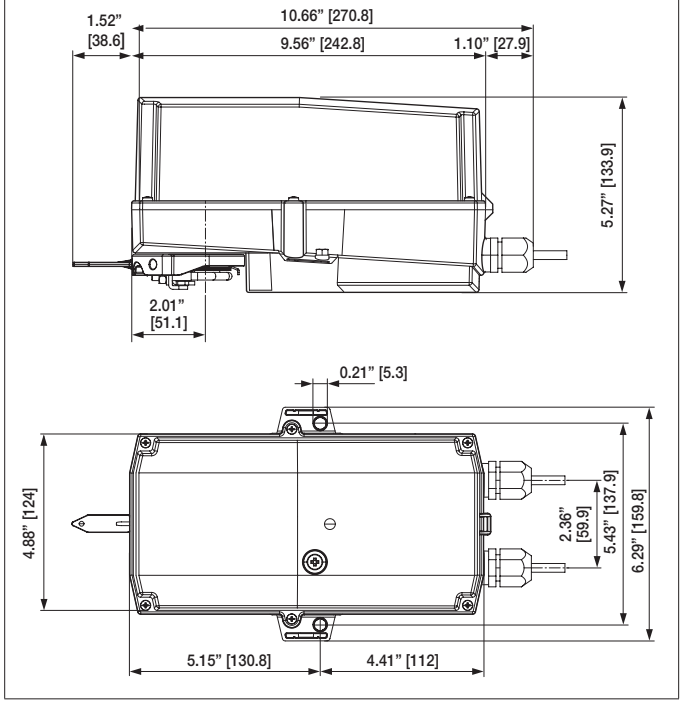

Date created, 03/20/2020 - Subject to change. © Belimo Aircontrols (USA), Inc.

AMX24-MFT-T N4 Technical Data Sheet

NEMA 4X, Modulating Control, Non-Spring Return, Direct Coupled, 24 V, Multi-Function Technology®

Typical Specification

Proportional control damper actuators shall be electronic direct-coupled type, which require no crank arm and linkage and be capable of direct mounting to a shaft up to 3/4" diameter. Actuators must provide proportional damper control in response to a 2 to 10 VDC or, with the addition of a 500 Ω resistor, a 4 to 20 mA control input from an electronic controller or positioner. Actuators shall have brushless DC motor technology and be protected from overload at all angles of rotation. Actuators shall have reversing switch and manual override on the cover. If required, actuator will be provided with screw terminal strip for electrical connections (AMX24-SR-T and NMX24-SR-T). Run time shall be constant and independent of torque. A 2 to 10 VDC feedback signal shall be provided for position indication. Actuators shall be cULus listed, have a 5-year warranty, and be manufactured under ISO 9001 International Quality Control Standards. Actuators shall be as manufactured by Belimo.

Wiring Diagrams

(A) Actuators with appliance cables are numbered.

△1 Provide overload protection and disconnect as required.

△3 Actuators may also be powered by 24 VDC.

△5 Only connect common to negative (-) leg of control circuits.

△7 A 500 Ω resistor (ZG-R01) converts the 4 to 20 mA control signal to 2 to 10 VDC.

△10 For triac sink the Common connection from the actuator must be connected to the Hot connection of the controller. Position feedback cannot be used with a triac sink controller; the actuator internal common reference is not compatible.

△11 Actuators may be connected in parallel if not mechanically linked. Power consumption and input impedance must be observed.

△12 IN4004 or IN4007 diode. (IN4007 supplied, Belimo part number 40155).

△16 Actuators are provided with a numbered screw terminal strip instead of a cable.

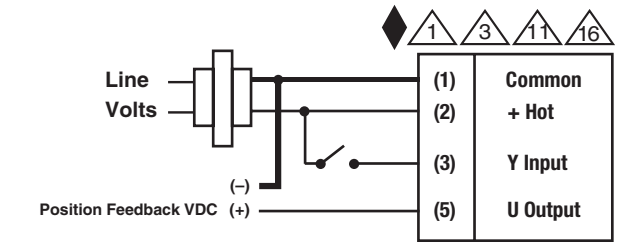

On/Off 24 VAC Transformer

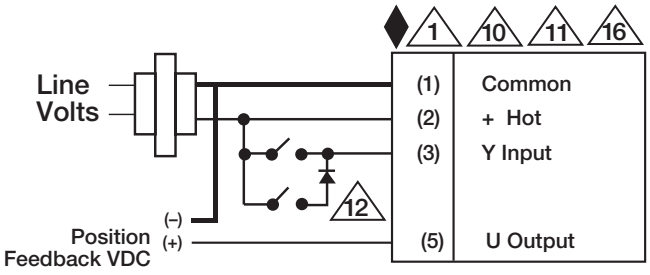

Floating Point 24 VAC Transformer (AC Only)

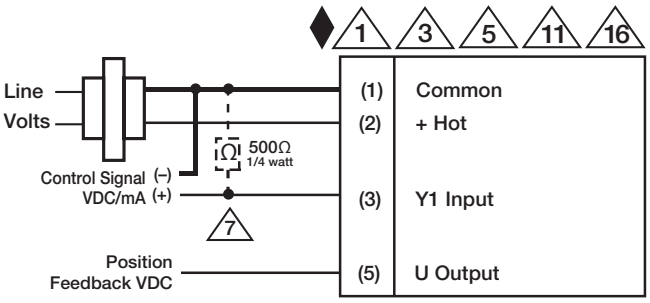

VDC/mA Control 24 VAC Transformer

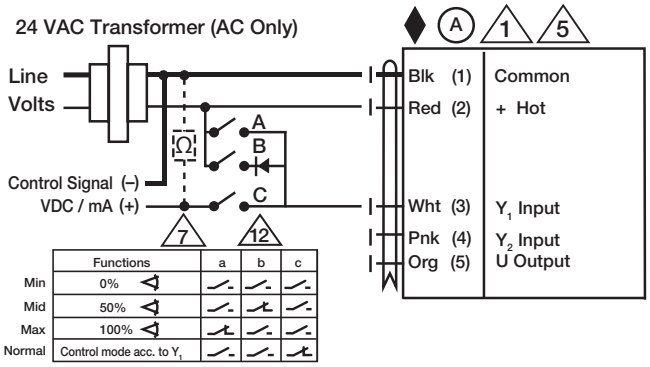

Override Control

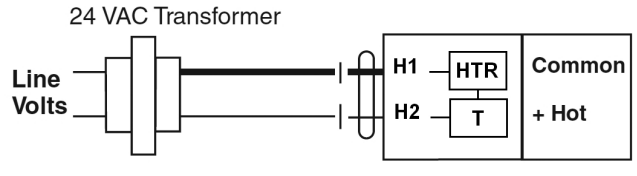

NEMA 4 Heater Option

Date created, 03/20/2020 - Subject to change. © Belimo Aircontrols (USA), Inc.