CUI DEVICES

SERIES: AMT23 | **DESCRIPTION:** MODULAR ABSOLUTE ENCODER

FEATURES

- patented capacitive ASIC technology
- low power consumption
- 12 or 14-bit absolute positon
- single ended 3-wire Synchronous Serial Interface
- checksum bits for error detection
- configuration and firmware updates via AMT Viewpoint™ software
- digitally settable zero position
- compact modular package with locking hub for ease of installation
- radial and axial cable connections
- -40 ~ 105°C operating temperature

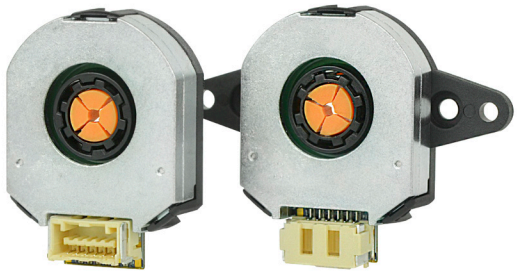

RoHS

ELECTRICAL

parameter	conditions/description	min	typ	max	units
power supply	VDD	3.8	5	5.5	V
start-up time[1]			200		ms
current consumption	with unloaded output		16		mA
input low level				0.8	V
input high level		2.0		5.5	V
output low level				0.4	V
output high level			3.3		V

Note: 1. Encoder must be stationary during start-up.

ABSOLUTE POSITION CHARACTERISTICS

parameter	conditions/description	min	typ	max	units
resolution	12 or 14-bit				
accuracy			0.2		degrees
absolute zero position	configurable via AMT Viewpoint™ GUI				
absolute position update rate	12-bit 14-bit		25 100		µs µs

MECHANICAL

parameter	conditions/description	min	typ	max	units
motor shaft length		9			mm
motor shaft tolerance			NOM +0/-0.015		mm
weight			15.7		g
axial play				±0.3	mm
rotational speed	12-bit position resolution 14-bit position resolution			8,000 4,000	RPM RPM

ENVIRONMENTAL

parameter	conditions/description	min	typ	max	units
operating temperature		-40		105	°C
humidity	non-condensing			85	%
vibration	10~500 Hz, 5 minute sweep, 2 hours on each XYZ			5	G
shock	3 pulses, 6 ms, 3 on each XYZ			200	G
RoHS	yes				

SERIAL INTERFACE

parameter	conditions/description	min	typ	max	units
protocol	single ended 3-wire Synchronous Serial Interface[2]				
data rate			1	2	MHz
T_{CLK}	data shifted to output buffer			500	ns
T_{DOV}	time before data is valid			250	ns
T_{CS}	time between reads	1			µs

Notes: 2. All SSI signals are single ended. This interface uses a chip select signal for initiating position reads.

Figure 1
Timing Waveform

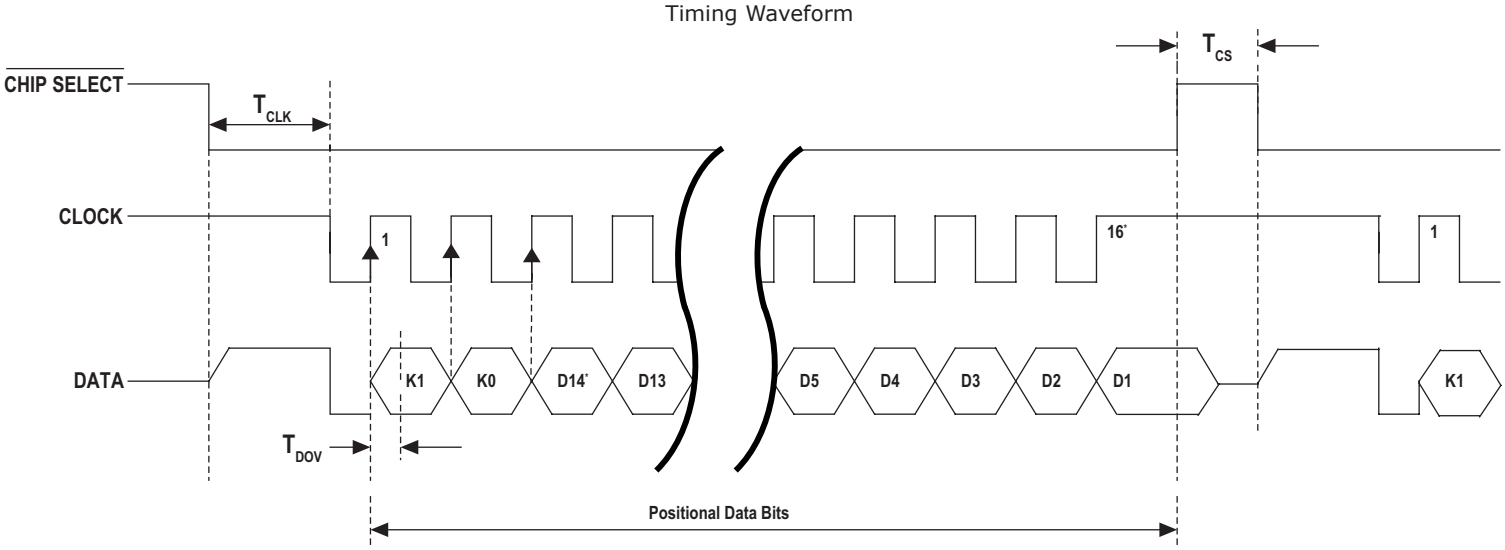

Notes: *For 12-bit applications the clock can be stopped after 14 cycles, or if you clock the full 16 times L0 and L1 are always 0. Because the low two bits are 0, 12-bit data would need to be right-shifted two bits. The checkbit calculation remains the same and unaffected.

Values K1 and K0 in the response are checkbits. The checkbits are odd parity over the odd and even bits in the position response shown in the equation below. The checkbits are not part of the position, but are used to verify its validity. The lower 14 bits are the encoder position.

Example:
Full response: 0x61AB
14-bit position: 0x21AB (8619 decimal)

Checkbit Formula

Odd: K1 = !(H5^H3^H1^L7^L5^L3^L1)
Even: K0 = !(H4^H2^H0^L6^L4^L2^L0)

From the above response 0x61AB:
Odd: 0 = !(1^0^0^1^1^1^1) = correct
Even: 1 = !(0^0^1^0^0^0^1) = correct

PART NUMBER KEY

For customers that prefer a specific AMT23 configuration, please reference the custom configuration key below.

AMT23 X X - XXXX - X

- Base Number
- Orientation: 2 = Radial, 3 = Axial
- Absolute Resolution: A = 12-bit, B = 14-bit
- Sleeve Bore Diameter: 2000 = 2 mm, 3000 = 3 mm, 3175 = 3.175 mm (1/8”), 4000 = 4 mm, 4760 = 4.76 mm (3/16”), 5000 = 5 mm, 6000 = 6 mm, 6350 = 6.35 mm (1/4”), 8000 = 8 mm
- Mounting Base: S = Standard, W= Wide

AMT23-V KITS

In order to provide maximum flexibility for our customers, the AMT23 series is provided in kit form standard. This allows the user to implement the encoder into a range of applications using one sku#, reducing engineering and inventory costs.

ORDERING GUIDE

AMT23XX-V

- Orientation: 2 = Radial, 3 = Axial
- Absolute Resolution: A = 12-bit, B = 14-bit

SLEEVES								
								
2mm	3mm	1/8 inch (3.175mm)	4mm	3/16 inch (4.76mm)	5mm	6mm	1/4 inch (6.35mm)	8mm
Light Sky Blue	Orange	Purple	Gray	Yellow	Green	Red	Snow	Blue

BASE	WIDE BASE	TOP COVER	SHAFT ADAPTER	TOOL A	TOOL C
	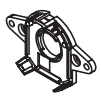				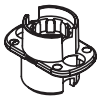

ENCODER INTERFACE

PINOUT CONNECTOR	
#	**Function**
1	+5 V
2	DATA
3	CLOCK
4	GND
5[1]	MODE
6	CHIP SELECT

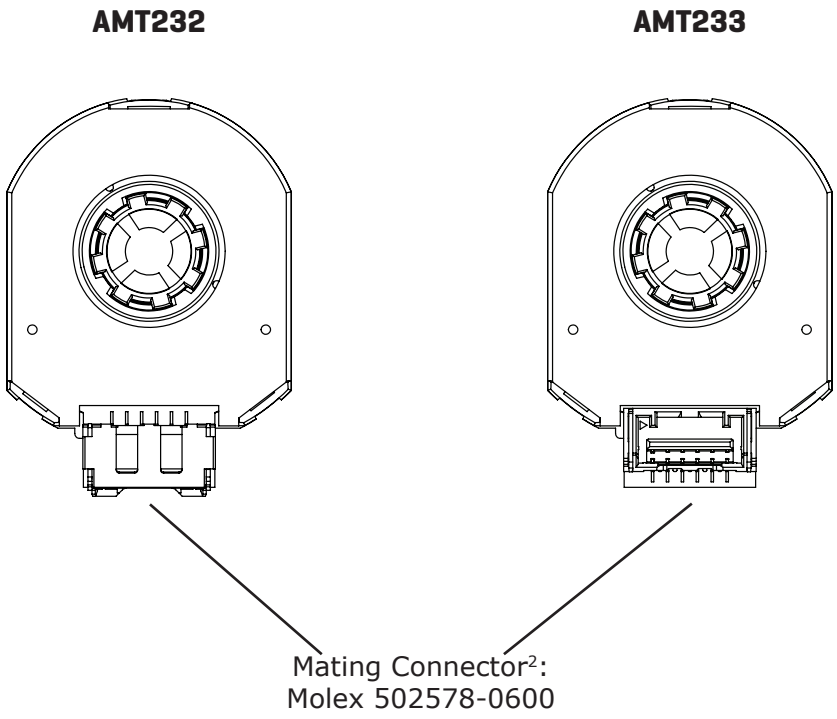

Notes: 1. Mode pin is used by AMT Viewpoint™ for configuring the encoder and should be left open during normal operation.
2. Compatible with prototype cable AMT-06C-1-036 and programming cable AMT-06C-1-036-USB.

MECHANICAL DRAWING

AMT232

units: mm
tolerance: ±0.1

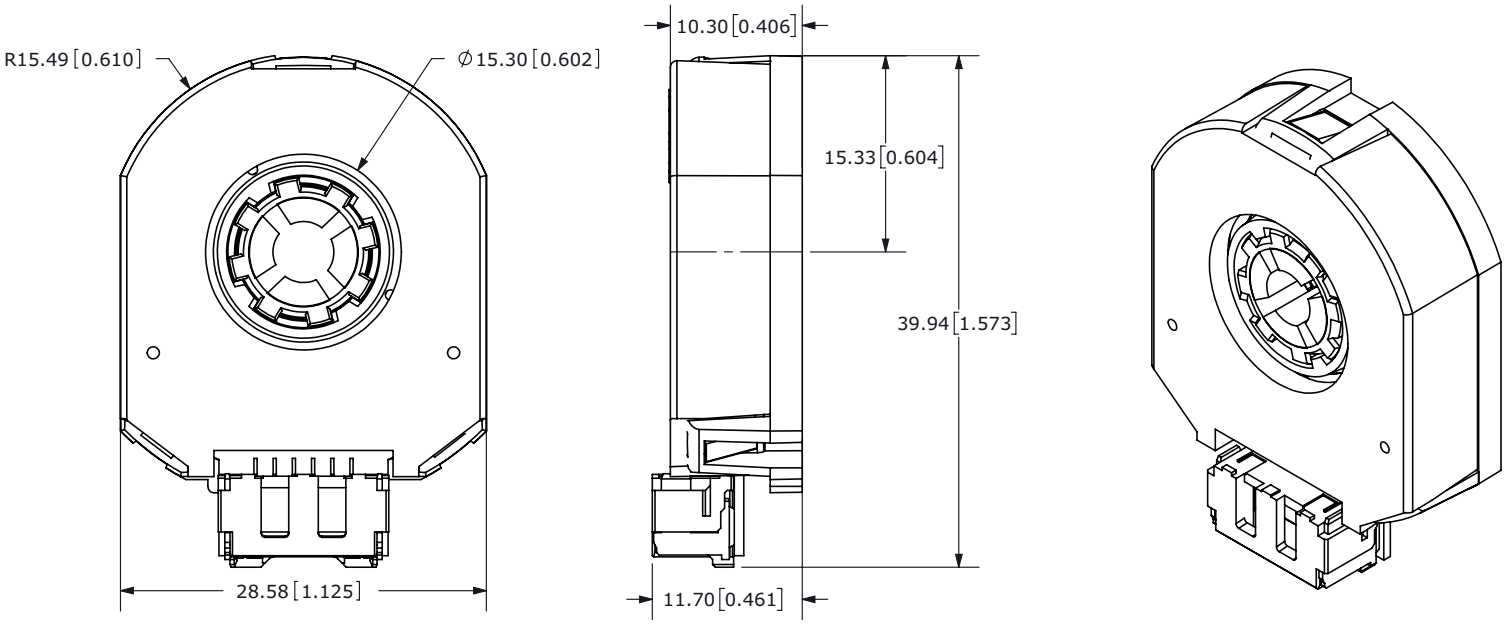

AMT233

units: mm
tolerance: ±0.1

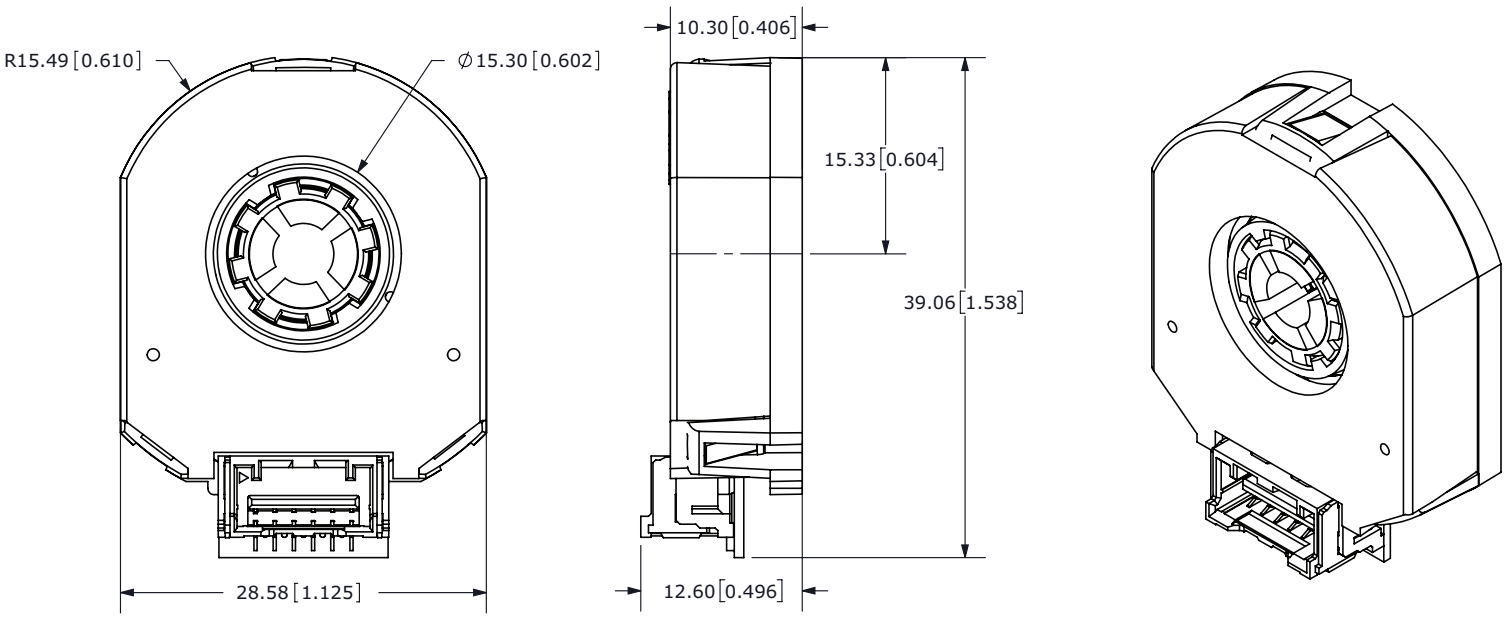

MECHANICAL DRAWING (CONTINUED)

MOUNTING HOLE PATTERNS

STANDARD BASE

units: mm[inch]
tolerance: ±0.1

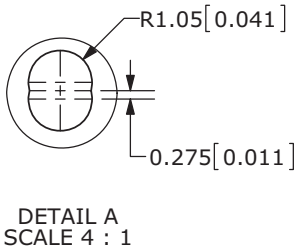

DETAIL A
SCALE 4 : 1

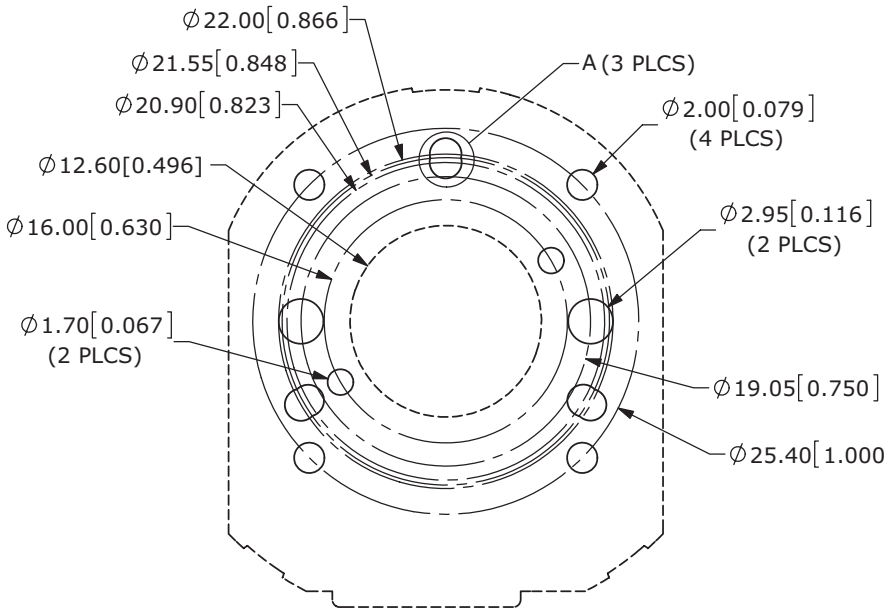

WIDE BASE

units: mm[inch]
tolerance: ±0.1

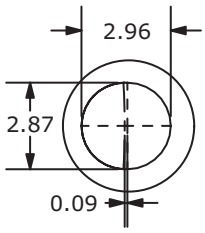

DETAIL A
SCALE 4 : 1

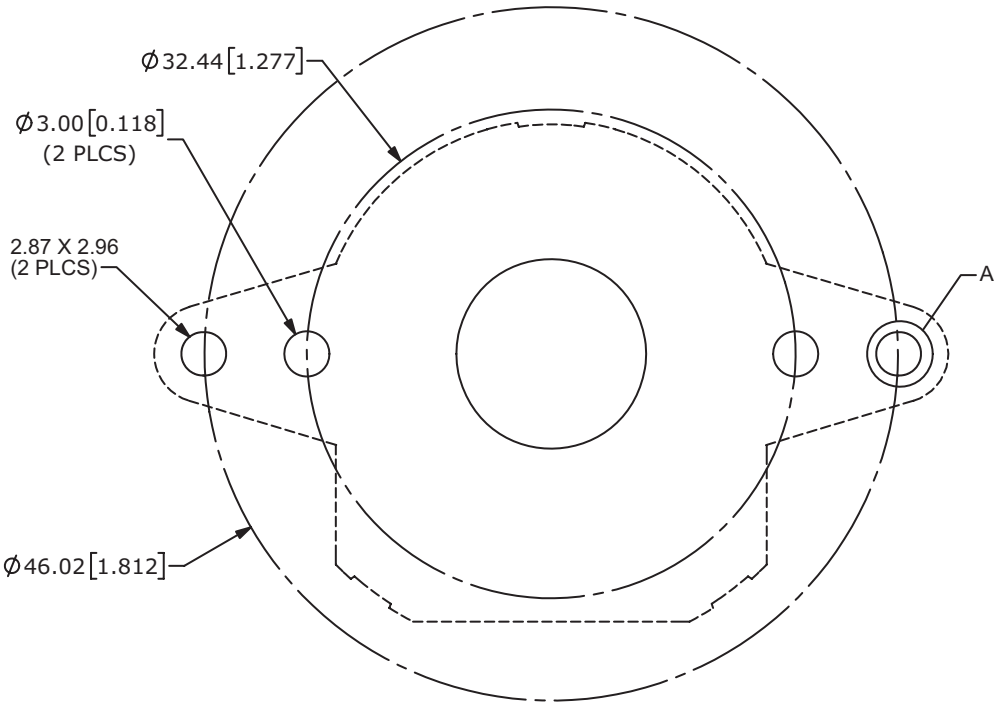

ASSEMBLY PROCEDURE

STEP 1

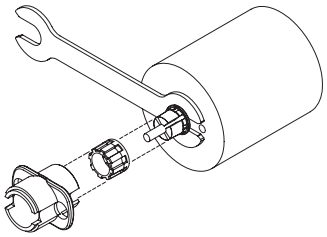

1. Insert Tool A as a spacer that defines the distance to the mounting surface.
2. Slide appropriate sized Sleeve over shaft all the way down to Tool A.
3. Slide Shaft Adaptor over Sleeve.
4. Use Tool C to press Shaft Adaptor over Sleeve (ensure Shaft Adapter and Tool C spline alignment) until flush with Tool A.

STEP 2

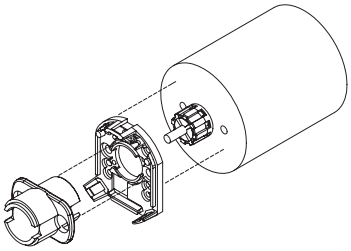

1. Remove Tools A and C.
2. Place Base on motor, with Tool C used as a centering tool.

STEP 3

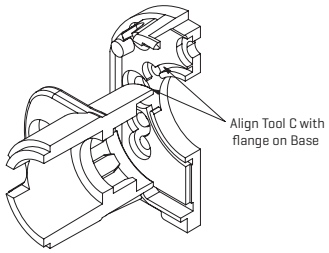

1. Align Tool C with flange on Base.
2. Slide Base and Tool C onto motor, centering onto the Shaft Adapter.

STEP 4

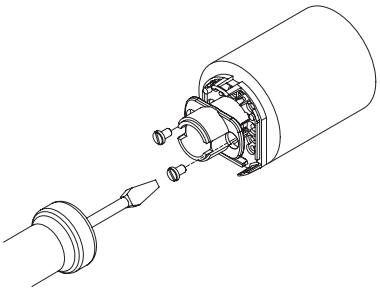

1. Fasten the Base on the motor (Tool C may need to be rotated to allow for some mounting configurations).
2. Remove Tool C.

STEP 5

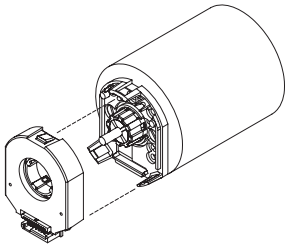

1. Snap the Top Cover onto the Base, carefully observing that the teeth of the Shaft Adaptor align with the grooves in the hub. *

* *We recommend no more than three cycles of mounting and removal of the AMT top cover base. Multiple cycles of mounting and removing the top cover can cause base fatigue over time and affect encoder performance.*

STEP 6

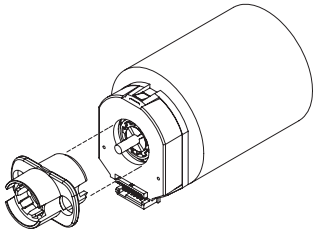

1. Make sure the snaps are fully engaged by pressing on the Hub with the reverse side of Tool C.
2. When assembly is finished, the Shaft Adaptor, Sleeve and Rotor Hub should all be flush with the Motor Shaft rotating freely.

REVISION HISTORY

rev.	description	date
1.0	initial release	01/23/2018
1.01	added serial interface details	05/08/2018
1.02	updated current consumption value	07/17/2019
1.03	added start-up time details	08/12/2019
1.04	brand update	11/21/2019
1.05	added motor shaft tolerance details, updated start-up details	09/10/2021

The revision history provided is for informational purposes only and is believed to be accurate.

CUI DEVICES

CUI Devices offers a one (1) year limited warranty. Complete warranty information is listed on our website.

CUI Devices reserves the right to make changes to the product at any time without notice. Information provided by CUI Devices is believed to be accurate and reliable. However, no responsibility is assumed by CUI Devices for its use, nor for any infringements of patents or other rights of third parties which may result from its use.

CUI Devices products are not authorized or warranted for use as critical components in equipment that requires an extremely high level of reliability. A critical component is any component of a life support device or system whose failure to perform can be reasonably expected to cause the failure of the life support device or system, or to affect its safety or effectiveness.

cuidevices.com