Advanced Monolithic Systems

AMS431

PRECISION ADJUSTABLE SHUNT REGULATOR

FEATURES

- **Trimmed 0.25% Reference**
- **Wide Operating Current Range 250µA to 150mA**
- **Low Dynamic Output Impedance**
- **Low Output Noise**
- **Nominal Temperature Range to 85°C**
- **Temperature-Compensated: 60ppm/°C**
- **Internal Amplifier with 150mA Capability**

APPLICATIONS

- **Battery Powered Systems**
- **Switching Power Supplies**
- **Adjustable Power Supplies**
- **Linear Regulators**
- **Error Amplifiers**
- **Notebook/Personal Computer**
- **Monitors/ VCR/ TV**
- **Pagers**

GENERAL DESCRIPTION

The AMS431 is a three-terminal adjustable shunt regulator with guaranteed temperature stability over the entire range of operation. The output voltage can be set to any value between 2.5V (VREF) and 36V by adding two external resistors. Due to the sharp turn-on characteristics this device is an excellent replacement for zener diodes in many applications.

AMS431 is available in TO-92, SO-8, SOT-89 and SOT-23 packages.

ORDERING INFORMATION:

TOL.	PACKAGE TYPE				OPERATING TEMP. RANGE
	TO-92	8 LEAD SOIC	SOT-89	3 LEAD SOT-23	
±0.25%	AMS431AN	AMS431AS	AMS431AL	AMS431AM	-40 to +85° C
±0.5%	AMS431BN	AMS431BS	AMS431BL	AMS431BM	-40 to +85° C
±1.0%	AMS431CN	AMS431CS	AMS431CL	AMS431CM	-40 to +85° C

PIN CONNECTIONS

TO-92
Plastic Package (N)

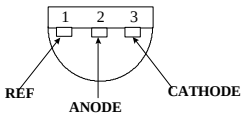

Bottom View

8L SOIC
SO Package (S)

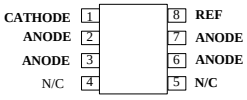

Top View

SOT-89
(L)

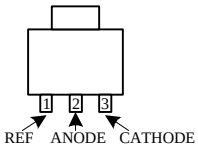

Top View

3L SOT-23
(M)

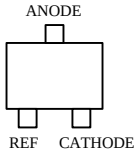

Top View

Advanced Monolithic Systems, Inc. 6680B Sierra Lane, Dublin, CA 94568 Phone (925) 556-9090 Fax (925) 556-9140

ABSOLUTE MAXIMUM RATINGS (Note 1)

Cathode Voltage (V_Z)	37V
Continuous Cathode Current (I_Z)	-10mA to +150mA
Reference Input Current (I_{REF})	10mA
Junction Temperature (T_J)	-40°C to +125°C
Storage temperature	-65°C to +150°C
Lead Temperature (Soldering, 10sec.)	265°C

Internal Power Dissipation (P_D)	
TO-92 Package	0.78W
SO-8 Package	0.71W
SOT-89 Package	0.91W
SOT-23 Package	0.28W
Thermal Resistance (φ_{JA})	
TO-92 Package	160°C/W
SO-8 Package	175°C/W
SOT-89 Package	110°C/W
SOT-23 Package	410°C/W

Note 1 : Absolute Maximum Ratings indicate limits beyond which damage to the device may occur. Operating Ratings indicate conditions for which the device is intended to be functional, but do not guarantee specific performance limits. For guaranteed specifications and test conditions, see the Electrical Characteristics. The guaranteed specifications apply only for the test conditions listed.

ELECTRICAL CHARACTERISTICS

Electrical Characteristics at I_Z =10 mA and T_A = +25°C unless otherwise specified.

Parameter	Conditions	AMS431A			AMS431B			AMS431C			Units
		Min	Typ	Max	Min	Typ	Max	Min	Typ	Max	
Reference Voltage		2.489	2.495	2.501	2.483	2.495	2.507	2.470	2.495	2.520	V
Deviation of Reference Input Voltage over Temperature	$V_Z = V_{REF}$ (circuit 1) T_A = +25°C to +85°C		8.0	15		8.0	15		8.0	15	mV
	T_A = -40°C to +25°C		8.0	15		8.0	15		8.0	15	mV
Ratio of Change in Reference Voltage to Cathode Voltage	V_Z from V_{REF} to 10V		-0.5	-2.7		-0.5	-2.7		-0.5	-2.7	mV/V
	V_Z from V_{REF} to 36V		-1.0	-2.0		-1.0	-2.0		-1.0	-2.0	mV/V
Reference Input Current	R1 =10kΩ, R2 = ∞Ω (test circuit 2)		0.5	4.0		0.5	4.0		0.5	4.0	µA
Reference Input Current Deviation over Temperature	R1 =10kΩ, R2 = ∞Ω T_A = Full Range (test circuit 2)		0.4	1.2		0.4	1.2		0.4	1.2	µA
Off State Cathode Current	V_Z = 36V, V_{REF} = 0V (test circuit 3)		0.04	0.5		0.04	0.5		0.04	0.5	µA
Dynamic Output Impedance	f < 1KHz, $V_Z = V_{REF}$ I_Z =100µA to 100mA (test circuit 1)		0.25	0.5		0.25	0.5		0.25	0.5	Ω
Minimum Operating Current	$V_Z = V_{REF}$ (test circuit 1)		100	250		100	250		100	250	µA

RECOMMENDED OPERATING CONDITIONS:

	Min	Max
Cathode Voltage, (V_Z)	V_{REF}	36 V
Cathode Current, (I_Z)	0.25mA	120mA

TEST CIRCUITS

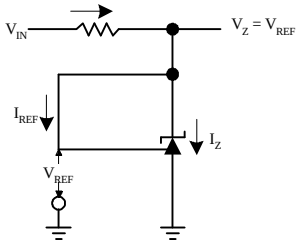

Figure 1. Test Circuit for V_Z=V_{REF}

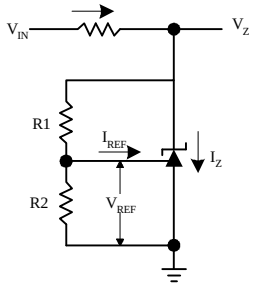

Figure 2. Test Circuit for V_{REF} vs I_Z. Test circuit for I_{REF}.

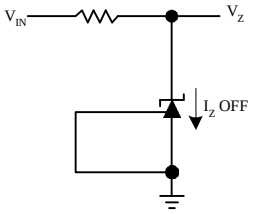

Figure 3. Test Circuit for Off-State Current

TYPICAL APPLICATIONS

Shunt Regulator

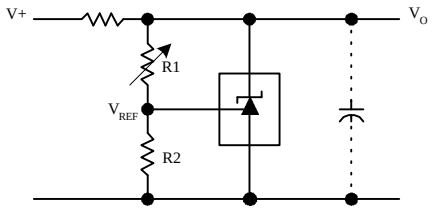

$V_O \approx (1+R1/R2)V_{REF}$

Single Supply Comparator with Temperature Compensated Threshold

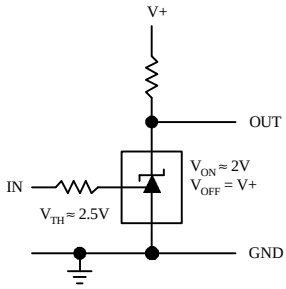

Series Regulator

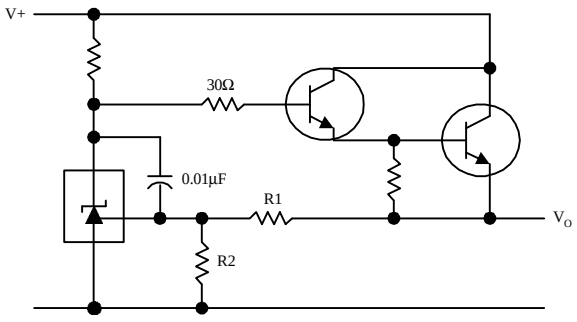

$V_O \approx (1+R1/R2)V_{REF}$

Higher Current Shunt Regulator

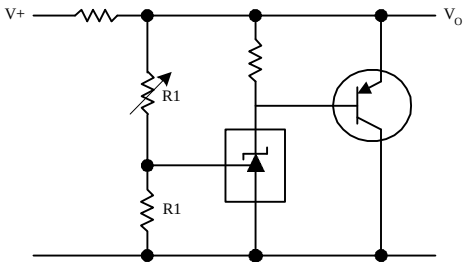

$V_O \approx (1+R1/R2)V_{REF}$

TYPICAL APPLICATIONS (Continued)

Over Voltage/Under Voltage Protection Circuit

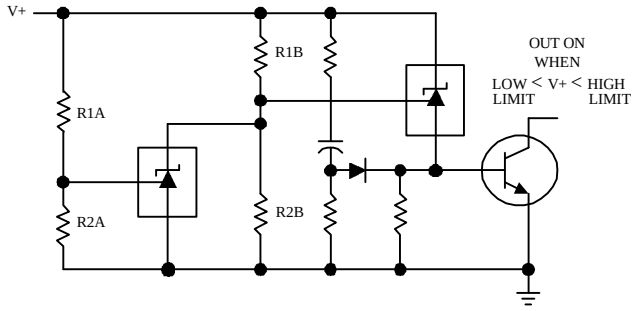

LOW LIMIT ≈ V_{REF}(1+R1B/R2B)+V_{BE}
LOW LIMIT ≈ V_{REF}(1+R1A/R2A)

Voltage Monitor

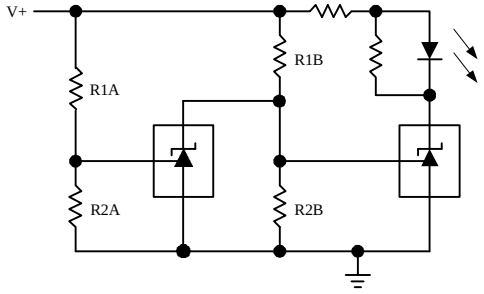

LOW LIMIT ≈ V_{REF}(1+R1B/R2B)+V_{BE}
LOW LIMIT ≈ V_{REF}(1+R1A/R2A)

LED ON WHEN
LOW LIMIT < V^+ < HIGH LIMIT

Delay Timer

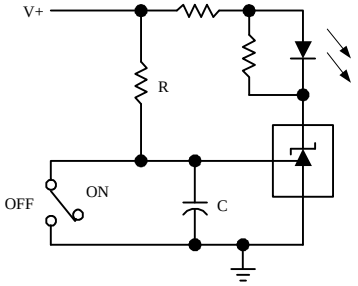

DELAY = R*C**ln***V+/(V+)-V_{REF}

Current Limiter or Current Source

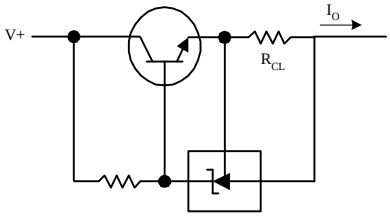

I_O =V_{REF}/R_{CL}

Constant Current Sink

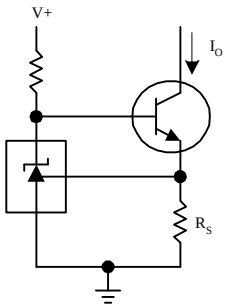

I_O = V_{REF}/R_S

TYPICAL PERFORMANCE CHARACTERISTICS

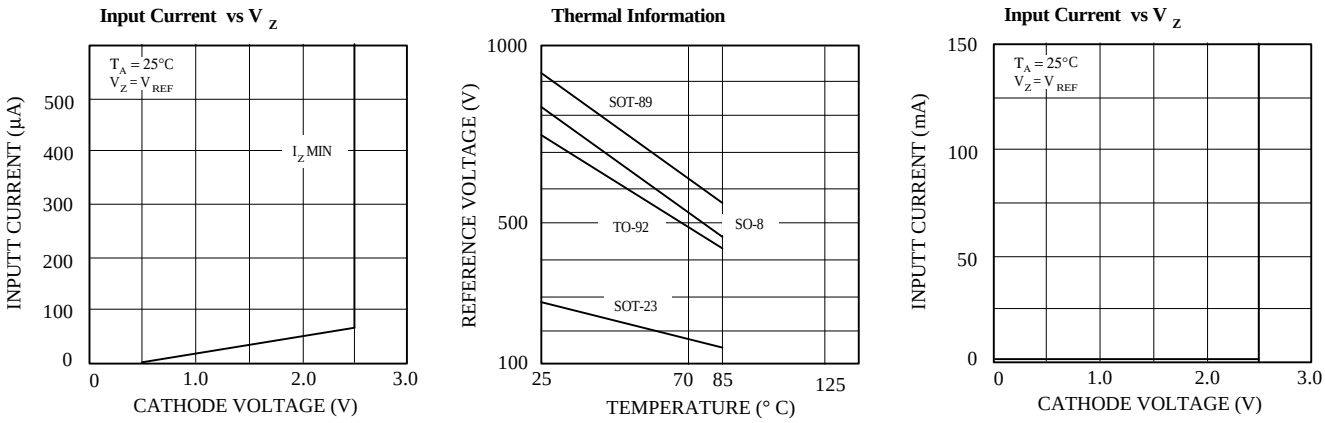

PACKAGE DIMENSIONS inches (millimeters) unless otherwise noted.

3L TO-92 PLASTIC PACKAGE (N)

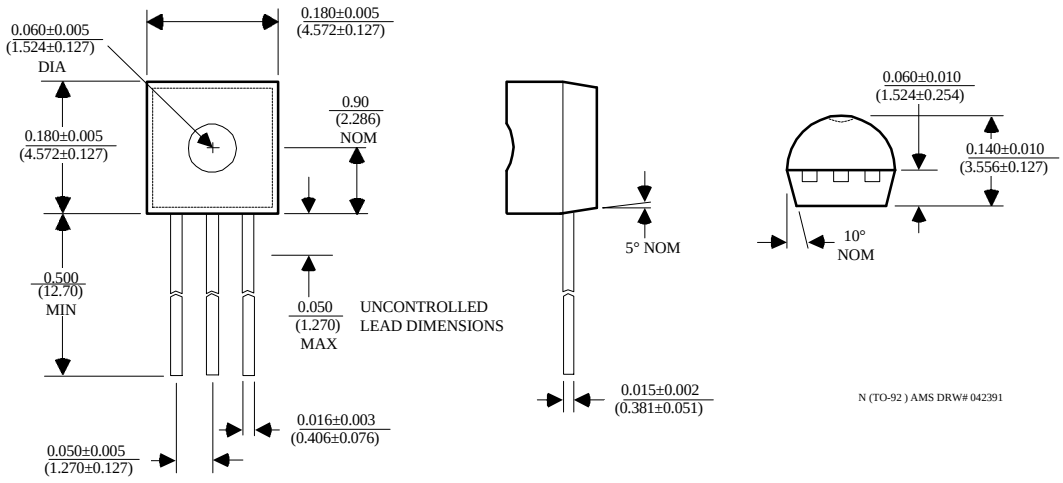

PACKAGE DIMENSIONS inches (millimeters) unless otherwise noted (Continued).

8 LEAD SOIC PLASTIC PACKAGE (S)

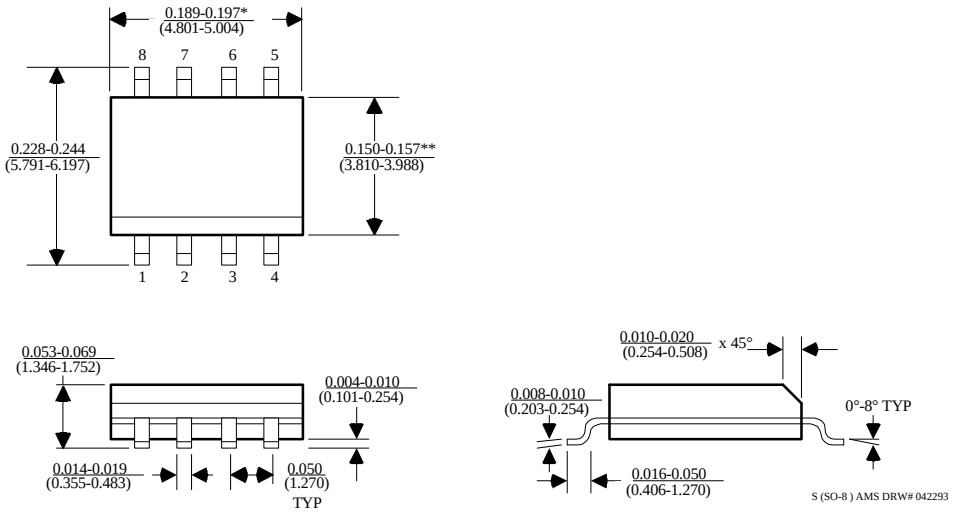

*DIMENSION DOES NOT INCLUDE MOLD FLASH. MOLD FLASH SHALL NOT EXCEED 0.006" (0.152mm) PER SIDE

**DIMENSION DOES NOT INCLUDE INTERLEAD FLASH. INTERLEAD FLASH SHALL NOT EXCEED 0.010" (0.254mm) PER SIDE

SOT-89 PLASTIC PACKAGE (L)

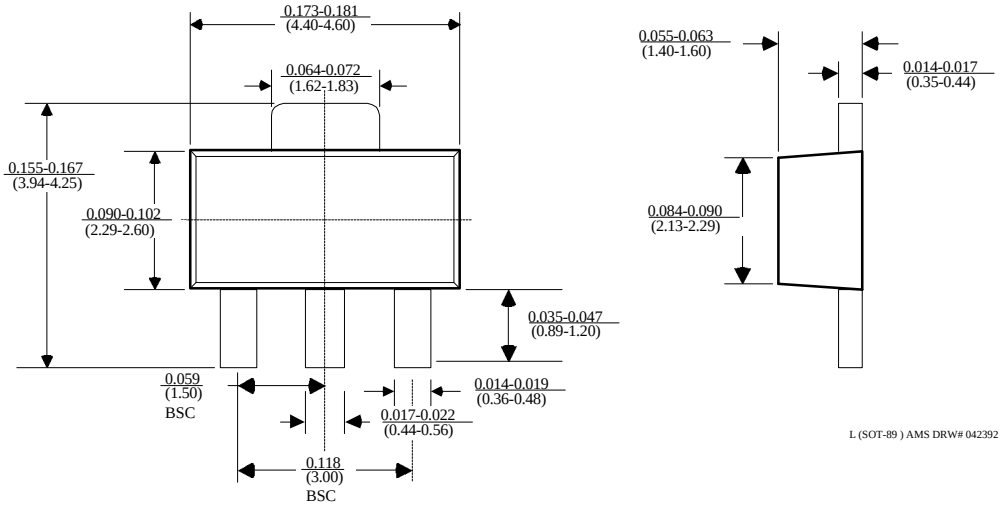

PACKAGE DIMENSIONS inches (millimeters) unless otherwise noted (Continued).

3 LEAD SOT-23 PLASTIC PACKAGE (M)

