AMR2 SERIES



AC - DC DIN RAIL MOUNTABLE POWER SUPPLY
INDUSTRIAL CONTROL EQUIPMENT

FEATURES

- UNIVERSAL INPUT 90~264VAC
- SHORT CIRCUIT PROTECTION
- INTERNAL INPUT FILTER
- LOW PROFILE FOR BUILDING AUTOMATION
- 3 YEARS WARRANTY

c UL us LISTED IND. CONT. EQ. UL 508 | c UL us Class I, Div 2 | c UL us UL 1310 | c UL us UL 60950-1 | EN 60950-1 | CE

MODEL LIST

MODEL NO.	INPUT VOLTAGE	OUTPUT WATTAGE	OUTPUT VOLTAGE	OUTPUT CURRENT	EFF. (min.)	EFF. (typ.)
Single Output Models						
AMR2-05	90~264 VAC	15 WATTS	+ 5 VDC	3000 mA	80%	82%
AMR2-12	90~264 VAC	24 WATTS	+ 12 VDC	2000 mA	82%	84%
AMR2-15	90~264 VAC	24 WATTS	+ 15 VDC	1600 mA	82%	84%
AMR2-24	90~264 VAC	24 WATTS	+ 24 VDC	1000 mA	83%	85%

SPECIFICATION

All Specifications Typical At Nominal Line, Full Load, 25°C Unless Otherwise Noticed

GENERAL

Characteristics	Conditions		min.	typ.	max.	unit
Switching frequency	Vi nom, Io nom			65		KHz
Isolation voltage	Input-Output		3,000/4,242			VAC / VDC
Isolation resistance	Input-Output, @ 500VDC		100			MΩ
Ambient temperature	Operating at Vi nom		-40		+ 71	°C
Derating (see derating curve)	Vi nom, from +61°C to +71°C				2.5	% / °C
Storage temperature	Non operational		-40		+ 85	°C
Relative humidity	Vi nom, Io nom		20		95	% RH
Temperature coefficient	Vi nom, Io min				± 0.03	% / °C
MTBF	Bellcore Issue 6 @40°C, GB	5V		866,000		Hours
		12V		803,000		Hours
		15V		814,000		Hours
		24V		848,000		Hours
Altitude during operation	IEC 60068-2-13				4,850	m
Dimension				L91 x W35 x D56.5		mm
Cooling	Free air convection					
Installation position	Vertical (other direction may derating using)					
Pollution degree				2		

INPUT SPECIFICATIONS

Characteristics	Conditions		min.	typ.	max.	unit
Rated input voltage	Io nom		100		240	VAC
Absolute input max. range	Ta min ... Ta max, Io nom	AC in	90		264	VAC
		DC in	120		375	VDC
Input current	Vi : 115 / 230 VAC, Io nom	5V		300 / 200		mA
		12V, 15V, 24V		450 / 270		mA
Rated input current	Vi : 90 VAC, Io nom	5V			400	mA
		12V, 15V, 24V			600	mA
Line frequency	Vi nom, Io nom		47		63	Hz
Inrush current	Vi : 115 / 230 VAC , Io nom				20 / 40	A

SPECIFICATION

All Specifications Typical At Nominal Line, Full Load, 25°C Unless Otherwise Noticed

INPUT SPECIFICATIONS

Characteristics	Conditions		min.	typ.	max.	unit
Power dissipation	Vi : 230 VAC, Io nom	5V		3.5		W
		12V		4.3		W
		15V		4.3		W
		24V		4.0		W
Leakage current	Input-Output				0.25	mA

OUTPUT SPECIFICATIONS

Characteristics	Conditions		min.	typ.	max.	unit
Output voltage accuracy (Adjusted before shipment)	Vi nom, Io max		0		+ 1	%
Minimum load	Vi nom		0			%
Line regulation	Io nom, Vi min ...Vi max				± 1	%
Load regulation	Vi nom, Io min ...Io nom				± 1	%
Voltage trim range	Vi nom, 0.8 Io nom	5V	5		5.5	VDC
		12V	12		14	VDC
		15V	13.5		16.5	VDC
		24V	24		28	VDC
Rated continuous loading	Vi nom,	5V	3A @ 5VDC / 2.7A @ 5.5VDC			
		12V	2A @ 12VDC / 1.7A @ 14VDC			
		15V	1.6A @ 15VDC / 1.4A @ 16.5VDC			
		24V	1A @ 24VDC / 0.85A @ 28VDC			
Hold up time	Vi : 115 / 230 VAC , Io nom		20 / 80			ms
Turn on time	Vi nom, Io nom				1,000	ms
	Vi nom, Io nom → with 3500 μF CAP				1,500	ms
Rise time	Vi nom, Io nom				150	ms
	Vi nom, Io nom → with 3500 μF CAP				500	ms
Fall time	Vi nom, Io nom				150	ms
Transient recovery time	Vi nom, 1~0.5 Io nom				2	ms
Ripple & noise	Vi nom, Io nom, BW = 20MHz				50	mV
Power back immunity	Vi nom, Io nom	5V	7.5			VDC
		12V	18			VDC
		15V	22			VDC
		24V	35			VDC
Capacitor load	Vi nom, Io nom				3,500	μF
DC ON indicator threshold at start up (Green LED)	Vi nom, Io nom	5V	3.5		4.5	VDC
		12V	9		10.8	VDC
		15V	11		13.5	VDC
		24V	19.2		21.6	VDC
DC LOW indicator threshold after start up (Red LED)	Vi nom, Io nom	5V	3.5		4.5	VDC
		12V	9		10.8	VDC
		15V	11		13.5	VDC
		24V	19.2		21.6	VDC
Efficiency	Vi nom, Io nom, Po / Pi		Up to 85%, See model list and typ efficiency curve			

CONTROL AND PROTECTION

Characteristics	Conditions		min.	typ.	max.	unit
Input fuse			T2A / 250VAC internal			
Internal surge voltage protection	IEC 61000-4-5		Varistor			
Rated over load protection	Vi nom (see typ current limited curve)		120		160	%
Over voltage protection	Vi nom, Io nom (Auto Recovery)	5V	5.75		6.5	VDC
		12V	15		16.5	VDC
		15V	18		20	VDC
		24V	30		33	VDC
Output short circuit			Hiccup mode			
Degree of protection			IP20			

SPECIFICATION

All Specifications Typical At Nominal Line, Full Load, 25°C Unless Otherwise Noticed

APPROVALS AND STANDARDS

UL / cUL	UL 508 Listed UL 60950-1, UL 1310, Class 2 Power Recognized ISA 12.12.01 (Class I, Division 2, Groups A, B, C and D)
TUV	EN 60950-1
CE	EN 61000-6-3, EN 55022 Class B, EN 61000-3-2, EN 61000-3-3, EN 61000-6-2, EN 55024, EN 61000-4-2 Level 4, EN 61000-4-3 Level 3 EN 61000-4-4 Level 4, EN 61000-4-5 L-N Level 3 EN 61000-4-6 Level 3, EN 61000-4-8 Level 4, EN 61000-4-11 ENV 50204 Level 2, EN 61204-3
Vibration resistance	meet IEC 60068-2-6 (Mounting on rail : 10-500 Hz, 2G, along X, Y, Z each Axis, 60 min for each Axis)
Shock resistance	meet IEC 60068-2-27 (15G, 11ms, 3 Axis, 6 Faces, 3 times for each Face)

PHYSICAL CHARACTERISTICS

Case size	91 x 35 x 56.5 mm (3.58 x 1.38 x 2.22 inches)
Case material	Plastic
Weight	130g
Packing	0.17kg ; 88pcs / 16kg / 2.28CUFT

MECHANISM & PIN CONFIGURATION

mm [inch]

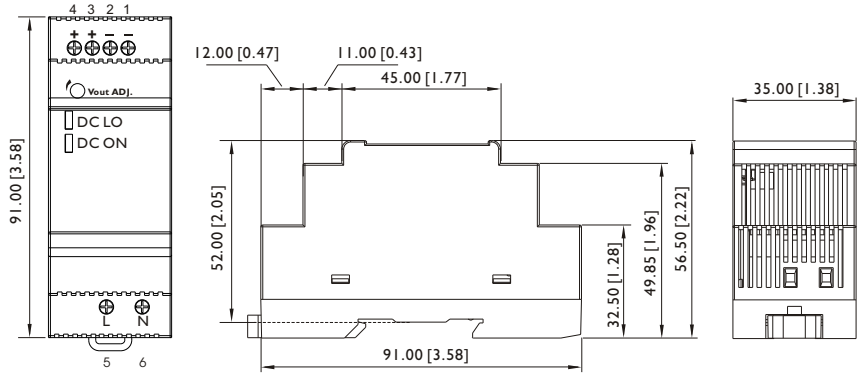

CONSTRUCTION

Easy snap-on mounting onto the DIN-Rail (TS35/7.5 or TS35/15), unit sits safely and firmly on the rail; no tools required even to remove

INSTALLATION

Ventilation / Cooling
Normal convection
All sides 25m/m free space
For cooling recommended
Connector size range
AWG24-12 (0.2~2.5mm^2) flexible / solid cable
-Connector can withstand torque at maximum 6 pound-inches.
7m/m stripping at cable end recommends.
Use copper conductors only, 60/75 °C

GENERAL TOLERANCE	
0.00[0.00] - 30.00[1.18]	±0.30[0.01]
30.00[1.18] - 120.00[4.72]	±0.50[0.02]

PIN ASSIGNMENT

PIN NO.	Designation		Description
1, 2	OUT	-	Negative output terminal
3, 4		+	Positive output terminal
5	IN	L	Input terminals (phase conductor, no polarity at DC input)
6		N	Input terminals (neutral conductor, no polarity at DC input)
	OTHER	Vout ADJ.	Trimmer-potentiometer for Vout adjustment
		DC ON	Operation indicator LED
		DC LO	DC Low indicator LED

CIRCUIT SCHEMATIC

• Block diagram for AMR2 series

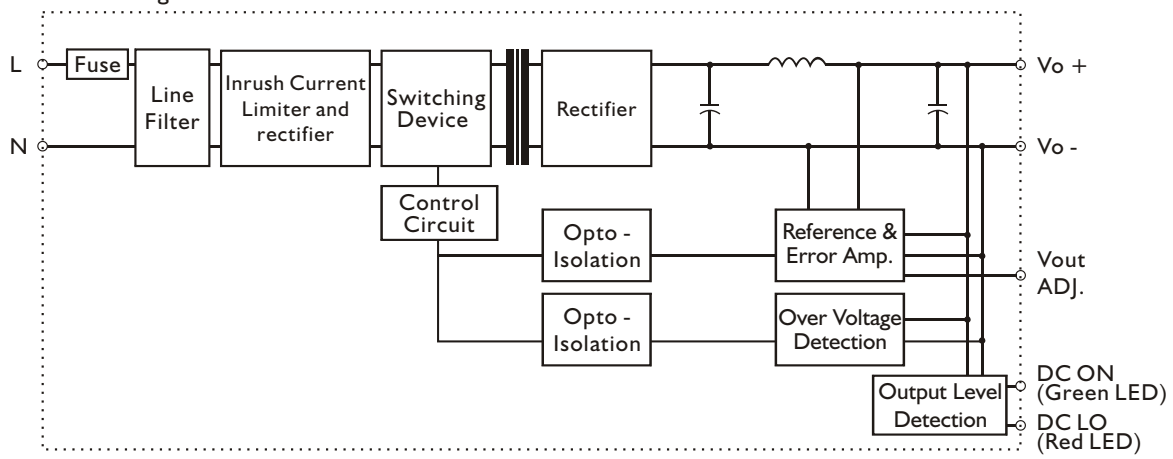

TYP. CURRENT LIMITED CURVE

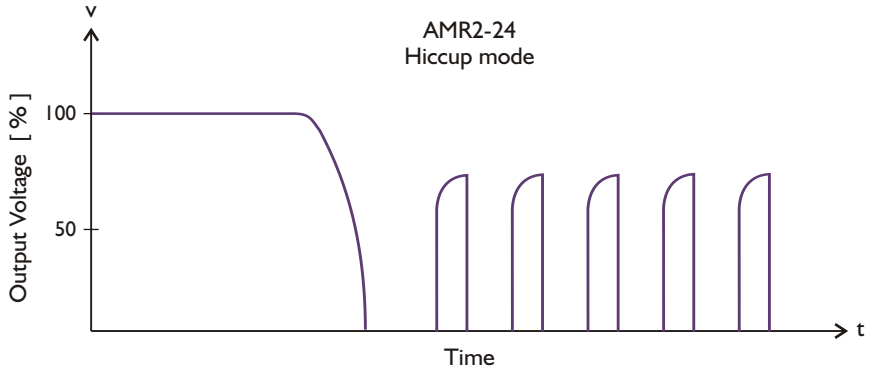

DERATING CURVE

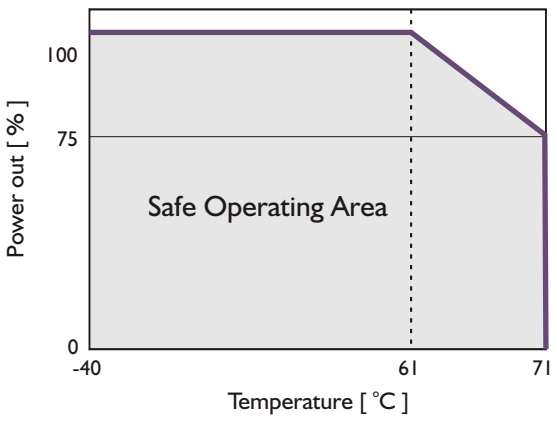

TYP. EFFICIENCY CURVE

