AMMC-2008
DC – 50 GHz SPDT Switch

Data Sheet

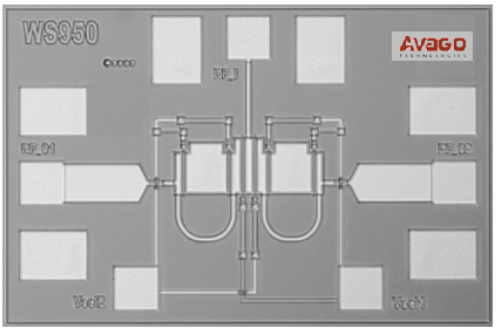

Chip Size: 930 x 630 µm (36.6 x 24.8 mils)
Chip Size Tolerance: ±10 µm (±0.4 mils)
Chip Thickness: 100 ± 10 µm (4 ± 0.4 mils)
Pad Dimensions: 80 x 80 µm (3.2 x 3.2 mils)

Description

Avago's AMMC-2008 is a monolithic PHEMT SPDT switch with low insertion loss and high isolation from DC to 50 GHz. This MMIC is designed for general-purpose applications. For improved reliability and moisture protection, the die is passivated at the active areas. One series and two shunt PHEMTs per throw provide 2.0 dB insertion loss and 28 dB isolation at 40 GHz.

Absolute Maximum Ratings[1]

Symbol	Parameters/Conditions	Units	Min.	Max.
V_{sel}	Select Voltages 1 & 2	V	-8	+1.4
P_{in}	RF Input Power	dBm		+20
T_b	Die Backside Temperature	°C		+140
T_{stg}	Storage Temperature	°C	-65	+165
T_{max}	Max. Assembly Temp (60 sec max)	°C		+300

Note:
1. Operation in excess of any one of these conditions may result in permanent damage to this device.

Features

- Wide frequency range: DC – 50 GHz
- Single pole double throw switch
- Low insertion loss: 2.3 dB (max.) at 40 GHz
- High isolation: 25 dB (min.) at 40 GHz
- Medium input power: P_{-1dB}: +14 dBm

Applications

- Instrumentation
- Communications
- Radar
- ECM
- EW
- Fiber optics
- Pulse modulation
- Port isolation
- Transfer switching
- High speed switching
- Replacement of mechanical switches

AMMC-2008 DC Specifications[1]

Symbol	Parameters and Test Conditions	Units	Min.	Typ.	Max.
I_{sel1}	Leakage Current at V_{sel1} = +0 V, V_{sel2} = -3 V	µA			20
I_{sel1}	Leakage Current at V_{sel1} = -3 V, V_{sel2} = +0 V	µA	-20		
I_{sel2}	Leakage Current at V_{sel2} = +0 V, V_{sel1} = -3 V	µA			20
I_{sel2}	Leakage Current at V_{sel2} = -3 V, V_{sel1} = +0 V	µA	-20		

Note:
1. Backside temperature T_b = 25°C unless otherwise noted.

RF Specifications[1,2] ($Z_{in} = Z_{out} = 50\Omega$, V_{sel1} = -3V, V_{sel2} = 0V)

Symbol	Parameters and Test Conditions	Freq.	Units	Min.	Typ.	Max.
IL	Insertion Loss, RF_{in} to RF_{out} (ON throw)	2 GHz 25 GHz 40 GHz	dB		1.6 1.6 2.0	2 2 2.3
ISO	Isolation, RF_{in} to RF_{out} (OFF throw)	2 GHz 25 GHz 40 GHz	dB	46 30 25	49 35 28	
RL_{in}	Input Return Loss	2 GHz 40 GHz	dB	15 15	16.5 23	
RL_{out-on}	Output Return Loss (ON throw)	2 GHz 40 GHz	dB	15 15	16.5 18	
$RL_{out-off}$	Output Return Loss (OFF throw)	2 GHz 40 GHz	dB		4.5 4.5	
P_{-1dB}	Input Power at 1 dB Gain Compression	25 GHz	dBm		+14	
H_2	2nd Harmonic, P_{out} = +5 dBm	2 GHz 12 GHz	dBc		-48 -43	-45 -40
H_3	3rd Harmonic, P_{out} = +5 dBm	2 GHz 12 GHz	dBc		-60 -60	-50 -50
IP3	Input 3rd Order Intercept Point, RF_{in1}=RF_{in2} = +5 dBm, Δf = 2 MHz		dBm	2 GHz 12 GHz	+27 +27	+32 +32
	Control Switching Speed[3]					
	10% – 90% rise time		ps		100	
	90% – 10% fall time		ps		90	

Notes:
1. Data measured in wafer form, T_{chuck} = 25°C.
2. 100% on-wafer RF test is done at frequency = 2, 10, 20, 30 and 40 GHz, except as noted.
3. Typical Vsel switching speed measured using Pulse Generator Model PG5000A. Measurement limited to rise/fall time of Pulse Generator.

AMMC-2008 Typical Performance (T = 25°C, V_{sel1} = -3V, V_{sel2} = 0V)

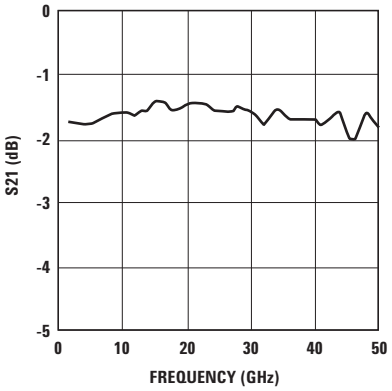

Figure 1. Insertion Loss.

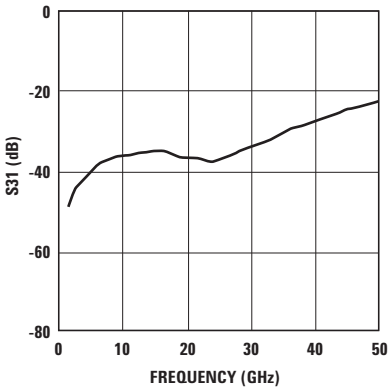

Figure 2. Isolation.

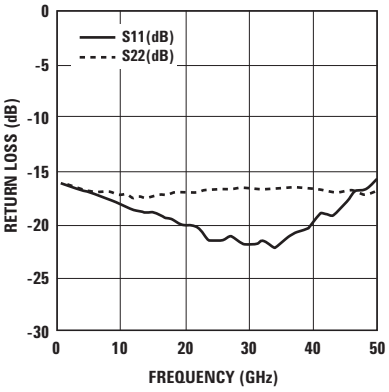

Figure 3. Return Loss.

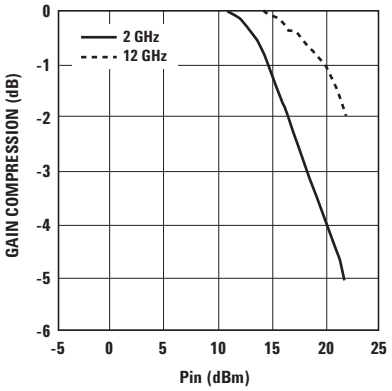

Figure 4. Gain Compression vs. Input Power.

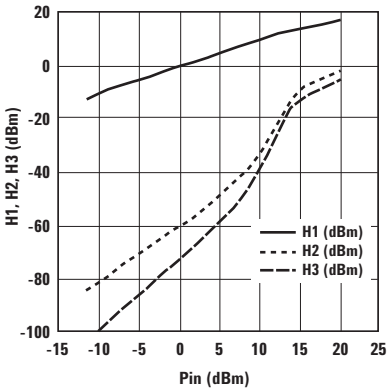

Figure 5. Harmonics vs. Input Power f_o=2 GHz.

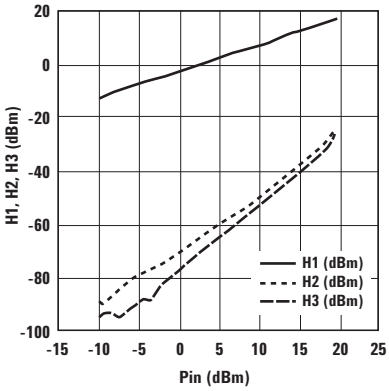

Figure 6. Harmonics vs. Input Power f_o=12 GHz.

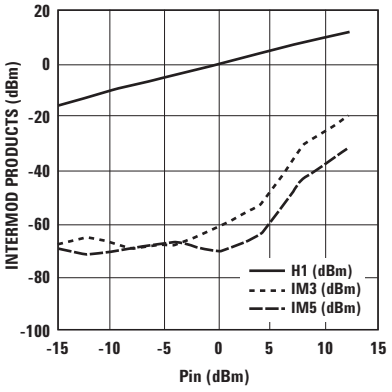

Figure 7. Intermodulation Products vs. Pin at f=2 GHz.

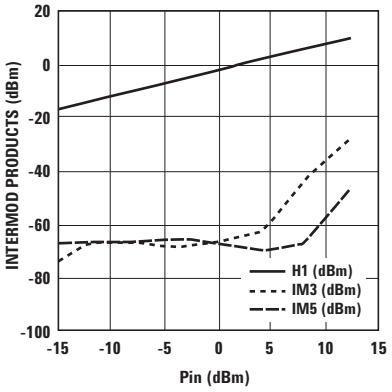

Figure 8. Intermodulation Products vs. Pin at f=12 GHz.

AMMC-2008 Typical Scattering Parameters[1] (T_{chuck} = 25°C, V_{sel1} = -3 V, V_{sel2} = 0 V)

RF Out1: OFF (terminated in 50-ohms), RF Out2: ON

Freq.	S_{11}			S_{21}			S_{12}			S_{22}		
GHz	dB	Mag	Phase	dB	Mag	Phase	dB	Mag	Phase	dB	Mag	Phase
1	-16.23	0.154	-8	-1.66	0.826	-3	-1.64	0.828	-3	-16.34	0.152	-10
2	-16.65	0.147	-12	-1.71	0.821	-5	-1.71	0.821	-5	-16.72	0.146	-17
3	-16.83	0.144	-14	-1.73	0.820	-7	-1.72	0.821	-7	-16.91	0.143	-22
4	-17.01	0.141	-18	-1.74	0.819	-9	-1.72	0.820	-9	-17.03	0.141	-29
5	-17.23	0.138	-22	-1.74	0.818	-11	-1.73	0.819	-12	-17.09	0.140	-35
6	-17.38	0.135	-24	-1.72	0.821	-13	-1.70	0.822	-13	-17.34	0.136	-40
7	-17.47	0.134	-28	-1.69	0.823	-16	-1.68	0.824	-16	-17.21	0.138	-46
8	-17.66	0.131	-32	-1.66	0.826	-18	-1.65	0.827	-18	-17.23	0.138	-52
9	-17.96	0.127	-35	-1.62	0.830	-20	-1.65	0.827	-21	-17.44	0.134	-58
10	-18.17	0.123	-37	-1.59	0.833	-23	-1.60	0.831	-23	-17.46	0.134	-61
11	-18.41	0.120	-42	-1.60	0.832	-25	-1.62	0.830	-25	-17.34	0.136	-68
12	-18.84	0.114	-44	-1.66	0.826	-27	-1.63	0.829	-28	-17.71	0.130	-73
13	-18.72	0.116	-45	-1.57	0.835	-30	-1.57	0.834	-30	-17.60	0.132	-76
14	-19.23	0.109	-49	-1.59	0.833	-32	-1.60	0.832	-33	-17.66	0.131	-83
15	-19.04	0.112	-51	-1.50	0.842	-35	-1.54	0.837	-35	-17.53	0.133	-84
16	-19.14	0.110	-56	-1.46	0.845	-37	-1.51	0.841	-37	-17.31	0.136	-89
17	-19.49	0.106	-60	-1.50	0.841	-40	-1.52	0.840	-40	-17.48	0.134	-96
18	-19.62	0.105	-65	-1.56	0.836	-43	-1.47	0.845	-43	-17.21	0.138	-99
19	-19.95	0.101	-68	-1.56	0.835	-45	-1.52	0.839	-45	-17.22	0.138	-104
20	-20.35	0.096	-71	-1.48	0.843	-48	-1.54	0.838	-48	-17.16	0.139	-109
21	-20.25	0.097	-75	-1.47	0.844	-50	-1.51	0.840	-50	-17.16	0.139	-113
22	-20.49	0.095	-80	-1.49	0.842	-53	-1.53	0.838	-53	-17.11	0.139	-118
23	-20.88	0.090	-83	-1.51	0.840	-55	-1.54	0.837	-56	-16.98	0.142	-122
24	-21.54	0.084	-88	-1.57	0.835	-58	-1.58	0.833	-58	-16.96	0.142	-126
25	-21.60	0.083	-93	-1.57	0.834	-61	-1.56	0.836	-60	-16.96	0.142	-131
26	-21.64	0.083	-98	-1.55	0.837	-63	-1.51	0.840	-63	-16.88	0.143	-135
27	-21.32	0.086	-100	-1.59	0.832	-66	-1.51	0.841	-66	-16.92	0.143	-140
28	-21.58	0.083	-108	-1.55	0.837	-68	-1.54	0.837	-68	-16.82	0.144	-144
29	-22.10	0.079	-113	-1.58	0.833	-71	-1.58	0.833	-71	-16.83	0.144	-149
30	-22.02	0.079	-120	-1.58	0.833	-74	-1.61	0.831	-73	-16.81	0.144	-155
31	-22.09	0.079	-127	-1.63	0.829	-76	-1.55	0.836	-76	-16.83	0.144	-160
32	-21.66	0.083	-131	-1.75	0.818	-79	-1.53	0.839	-79	-16.84	0.144	-166
33	-21.85	0.081	-139	-1.64	0.828	-81	-1.62	0.830	-82	-16.82	0.144	-168
34	-22.36	0.076	-146	-1.58	0.834	-84	-1.64	0.828	-84	-16.83	0.144	-174
35	-21.91	0.080	-156	-1.60	0.832	-87	-1.64	0.828	-87	-16.75	0.145	180
36	-21.19	0.087	-162	-1.66	0.826	-90	-1.63	0.829	-90	-16.74	0.146	174
37	-20.74	0.092	-168	-1.67	0.825	-93	-1.64	0.828	-93	-16.67	0.147	166
38	-20.81	0.091	-174	-1.67	0.825	-94	-1.63	0.829	-95	-16.78	0.145	161
39	-20.63	0.093	175	-1.69	0.823	-98	-1.63	0.829	-98	-16.68	0.147	154
40	-19.95	0.101	165	-1.69	0.823	-101	-1.65	0.827	-101	-16.80	0.145	145
41	-19.16	0.110	162	-1.75	0.818	-104	-1.68	0.824	-104	-16.84	0.144	138
42	-19.26	0.109	158	-1.67	0.825	-107	-1.75	0.817	-107	-17.08	0.140	129
43	-19.29	0.108	153	-1.63	0.828	-110	-1.78	0.815	-110	-17.13	0.139	122
44	-19.00	0.112	144	-1.58	0.833	-113	-1.75	0.818	-113	-17.32	0.136	115
45	-18.09	0.125	137	-1.97	0.797	-117	-1.75	0.817	-116	-17.20	0.138	105
46	-17.09	0.140	137	-2.01	0.793	-119	-1.89	0.805	-119	-17.04	0.141	96
47	-17.08	0.140	134	-1.81	0.812	-121	-1.96	0.798	-123	-17.23	0.138	88
48	-16.94	0.142	128	-1.62	0.830	-124	-2.00	0.795	-125	-17.59	0.132	81
49	-16.32	0.153	122	-1.71	0.821	-129	-1.96	0.798	-127	-17.23	0.138	75
50	-15.74	0.163	115	-1.81	0.812	-134	-1.87	0.807	-131	-16.86	0.144	63

Note:

1. Data obtained from on-wafer measurements.

AMMC-2008 Typical Scattering Parameters[1] (T_{chuck} = 25°C, V_{sel1} = 0V, V_{sel2} = -3V)

RF Out1: ON, RF Out2: OFF (terminated in 50-ohms)

Freq.	S_{11}			S_{21}			S_{12}			S_{22}		
GHz	dB	Mag	Phase	dB	Mag	Phase	dB	Mag	Phase	dB	Mag	Phase
1	-15.47	0.168	-7	-53.97	0.002	94	-54.90	0.002	102	-4.66	0.585	178
2	-15.80	0.162	-14	-49.29	0.003	90	-49.25	0.003	90	-4.63	0.587	176
3	-16.20	0.155	-19	-45.20	0.005	86	-45.17	0.006	84	-4.58	0.590	174
4	-16.77	0.145	-24	-42.97	0.007	79	-43.04	0.007	78	-4.52	0.594	172
5	-17.21	0.138	-26	-41.36	0.009	73	-41.65	0.008	73	-4.44	0.600	170
6	-17.29	0.137	-28	-39.87	0.010	74	-39.74	0.010	73	-4.36	0.605	167
7	-17.22	0.138	-32	-38.16	0.012	65	-38.21	0.012	65	-4.29	0.610	165
8	-17.78	0.129	-38	-38.42	0.012	60	-38.37	0.012	61	-4.22	0.615	162
9	-18.23	0.123	-39	-37.60	0.013	58	-37.43	0.013	60	-4.15	0.620	159
10	-17.84	0.128	-40	-37.25	0.014	58	-36.97	0.014	58	-4.09	0.624	157
11	-17.76	0.129	-51	-36.70	0.015	52	-36.70	0.015	53	-4.04	0.628	154
12	-18.94	0.113	-59	-36.35	0.015	54	-36.50	0.015	54	-4.00	0.631	151
13	-20.14	0.098	-54	-36.41	0.015	53	-36.33	0.015	53	-3.97	0.633	148
14	-19.90	0.101	-51	-36.38	0.015	54	-36.31	0.015	54	-3.96	0.634	145
15	-18.88	0.114	-54	-35.72	0.016	47	-35.32	0.017	47	-3.94	0.635	142
16	-18.46	0.119	-65	-35.61	0.017	42	-35.49	0.017	44	-3.95	0.635	139
17	-18.70	0.116	-77	-35.90	0.016	42	-35.62	0.017	44	-3.95	0.635	136
18	-19.74	0.103	-87	-36.35	0.015	42	-36.51	0.015	40	-3.96	0.634	133
19	-21.80	0.081	-97	-37.22	0.014	46	-37.14	0.014	44	-3.99	0.632	130
20	-25.02	0.056	-90	-37.44	0.013	48	-37.33	0.014	48	-4.01	0.630	127
21	-23.45	0.067	-73	-37.49	0.013	47	-37.13	0.014	50	-4.03	0.629	124
22	-21.47	0.084	-82	-37.20	0.014	49	-37.01	0.014	50	-4.07	0.626	122
23	-21.65	0.083	-96	-38.25	0.012	52	-38.04	0.013	52	-4.11	0.623	119
24	-22.59	0.074	-106	-38.34	0.012	60	-38.34	0.012	59	-4.17	0.619	116
25	-22.63	0.074	-115	-38.35	0.012	68	-38.11	0.012	66	-4.17	0.619	113
26	-23.52	0.067	-132	-37.89	0.013	75	-37.42	0.013	74	-4.22	0.615	110
27	-27.01	0.045	-138	-36.88	0.014	83	-36.76	0.015	82	-4.26	0.613	107
28	-28.96	0.036	-108	-36.46	0.015	82	-36.14	0.016	82	-4.27	0.612	105
29	-24.73	0.058	-108	-35.27	0.017	84	-35.25	0.017	83	-4.31	0.609	101
30	-23.06	0.070	-137	-35.16	0.017	87	-35.00	0.018	86	-4.33	0.607	99
31	-23.94	0.064	-161	-34.51	0.019	93	-34.27	0.019	91	-4.37	0.605	96
32	-25.49	0.053	-167	-33.58	0.021	99	-33.56	0.021	91	-4.38	0.604	93
33	-25.94	0.050	180	-32.38	0.024	98	-32.74	0.023	95	-4.43	0.601	90
34	-28.94	0.036	152	-31.34	0.027	93	-31.68	0.026	94	-4.45	0.599	87
35	-40.23	0.010	119	-31.18	0.028	95	-31.04	0.028	96	-4.49	0.596	84
36	-27.64	0.041	-114	-30.30	0.031	95	-30.18	0.031	94	-4.52	0.594	81
37	-21.32	0.086	-148	-29.79	0.032	96	-29.50	0.034	91	-4.52	0.594	78
38	-20.15	0.098	175	-28.94	0.036	92	-29.27	0.034	90	-4.58	0.590	75
39	-22.12	0.078	144	-28.77	0.036	96	-28.93	0.036	93	-4.58	0.590	73
40	-24.36	0.061	144	-28.03	0.040	92	-28.05	0.040	91	-4.57	0.591	69
41	-21.84	0.081	155	-27.57	0.042	94	-27.62	0.042	91	-4.61	0.588	66
42	-21.32	0.086	140	-26.55	0.047	91	-26.98	0.045	91	-4.62	0.588	63
43	-24.37	0.060	129	-26.08	0.050	87	-26.38	0.048	90	-4.64	0.586	61
44	-24.69	0.058	147	-25.07	0.056	83	-25.67	0.052	87	-4.70	0.582	57
45	-19.69	0.104	143	-26.09	0.050	84	-25.23	0.055	85	-4.68	0.583	54
46	-17.83	0.128	129	-25.55	0.053	86	-25.02	0.056	83	-4.65	0.586	52
47	-19.34	0.108	122	-23.64	0.066	86	-24.44	0.060	81	-4.67	0.584	49
48	-20.09	0.099	122	-22.36	0.076	81	-24.04	0.063	79	-4.68	0.583	46
49	-19.24	0.109	117	-22.70	0.073	74	-23.62	0.066	79	-4.70	0.582	43
50	-19.75	0.103	114	-22.76	0.073	66	-23.00	0.071	76	-4.66	0.585	39

Note:

1. Data obtained from on-wafer measurements.

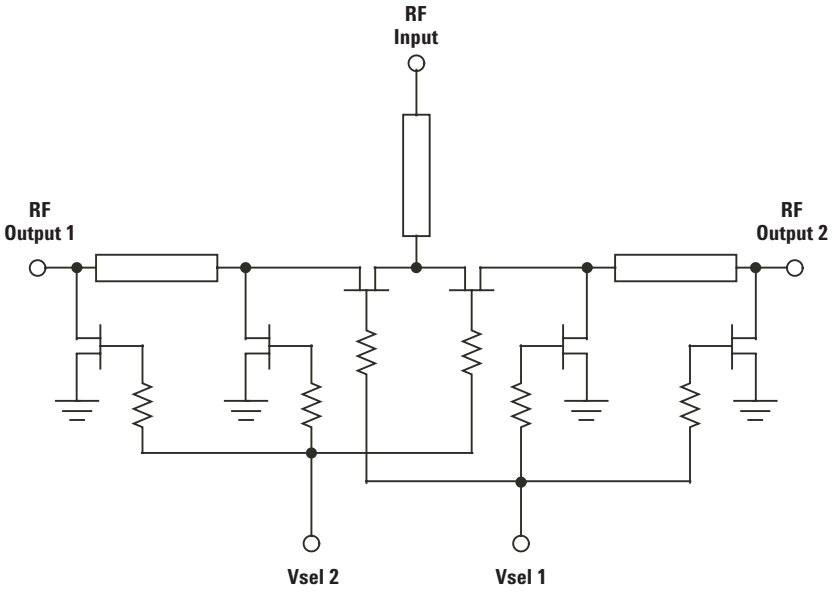

Figure 9. AMMC-2008 Schematic.

Recommended Operation Conditions

V_{sel1}	V_{sel2}	RF Out1	RF Out2
0.6 > 0 > -0.4	-3.5 > -3>-2.5	ON	OFF
-3.5>-3>-2.5	0.6>0>-0.4	OFF	ON
0.6>0>-0.4	0.6>0>-0.4	OFF	OFF
-3.5>-3>-2.5	-3.5>-3>-2.5	OFF	OFF

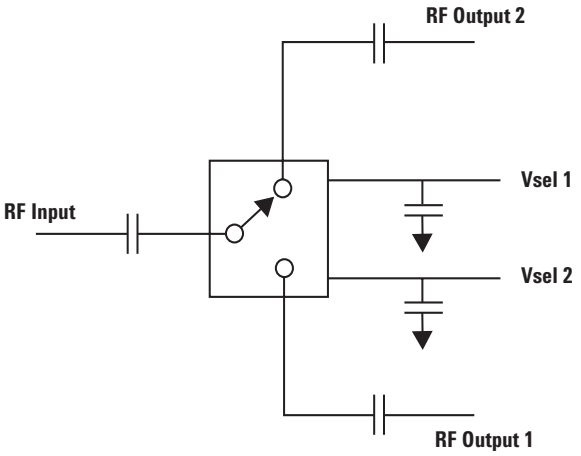

Figure 10. Biasing Diagram.

Operation

The RF Input and Output ports may be DC or AC-coupled. If DC-coupled, the voltages on the Input and Output ports must be 0 ± 0.25 volts for guaranteed switch performance.

Assembly Techniques

The chip should be attached directly to the ground plane using electrically conductive epoxy[1,2]. For conductive epoxy, the amount should be just enough to provide a thin fillet around the bottom perimeter of the die. The ground plane should be free of any residue that may jeopardize electrical or mechanical attachment. Caution should be taken to not exceed the Absolute Maximum Rating for assembly temperature and time.

Thermosonic wedge bonding is the preferred method for wire attachment to the bond pads. The RF connections should be kept as short as possible to minimize inductance. Gold mesh or double-bonding with 0.7 mil gold wire is recommended.

Mesh can be attached using a 2 mil round tracking tool and a tool force of approximately 22 grams with an ultrasonic power of roughly 55 dB for a duration of 76 ± 8 mS. A guided wedge at an ultrasonic power level of 64 dB can be used for the 0.7 mil wire. The recommended wire bond stage temperature is 150 ± 2°C.

The chip is 100 mm thick and should be handled with care.

This MMIC has exposed air bridges on the top surface. Handle at edges or with a custom collet (do not pick up die with vacuum on die center.)

This MMIC is also static sensitive and ESD handling precautions should be taken.

For more information, see Avago Application Note 5228

Notes:
1. Ablebond 84-1 LM1 silver epoxy is recommended.
2. Eutectic attach is not recommended and may jeopardize reliability of the device.

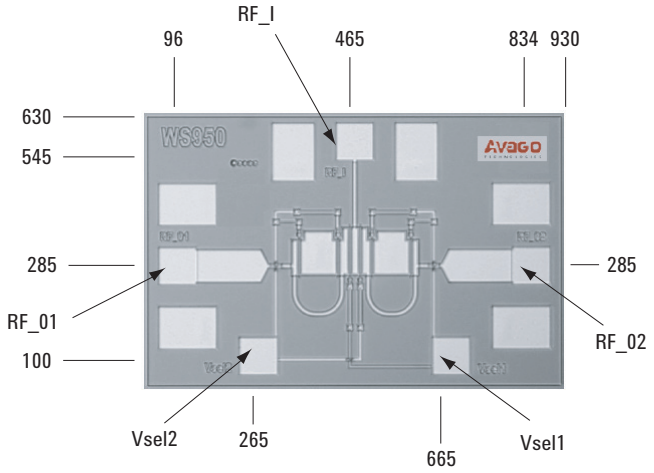

Figure 11. Chip Bias/RF Bond Pad Locations. (dimensions in micrometers)

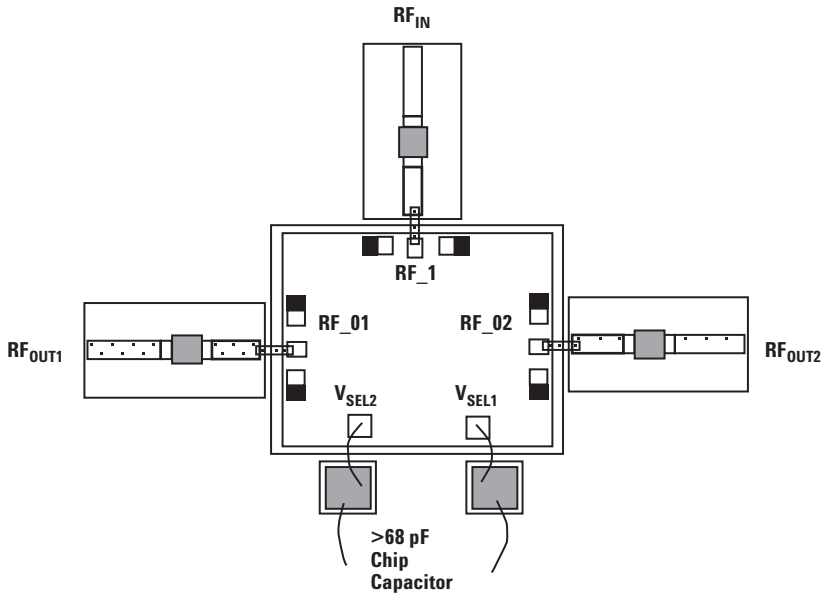

Figure 12. Chip Assembly Diagram.

Ordering Information

AMMC-2008-W10 = 10 devices per tray
AMMC-2008-W50 = 50 devices per tray

For product information and a complete list of distributors, please go to our web site: **www.avagotech.com**

Avago, Avago Technologies, and the A logo are trademarks of Avago Technologies Limited in the United States and other countries.
Data subject to change. Copyright © 2005-2008 Avago Technologies Limited. All rights reserved. Obsoletes 5989-3928EN
AV02-1260EN - June 23, 2008