aimtec
Your Power Partner

Series AMLDL-Z

Up to 1000mA | LED Driver



FEATURES:

- Step Down DC/DC LED driver
- Constant current output
- Wide (4:1) input voltage range
- High efficiency up to 95%
- Operating Temperature range -40ºC to +85ºC
- Open and Short LED Protection
- PWM/Digital and Analog Voltage dimming
- Remote ON/OFF Control

Models
Single output

Model	Input Voltage (V)	Output Voltage (V)	Maximum Rated Current (mA)	Max Capacitive Load (uF)	Efficiency (%)	Package Type
AMLDL-3030Z	7-30	2-28	300	47	95	DIP14
AMLDL-3035Z	7-30	2-28	350	47	95	DIP14
AMLDL-3050Z	7-30	2-28	500	47	95	DIP16
AMLDL-3060Z	7-30	2-28	600	47	95	DIP16
AMLDL-3070Z	7-30	2-28	700	47	95	DIP16
AMLDL-30100Z	7-30	2-28	1000	47	95	DIP16

NOTE: All specifications in this datasheet are measured at an ambient temperature of 25°C, humidity<75%, nominal input voltage and at rated output load unless otherwise specified.

Input Specifications

Parameters	Nominal	Typical	Maximum	Units
Voltage range	24	7-30		VDC
Filter		Capacitor		
Absolute Maximum Rating			40	VDC
Peak Input Voltage time			500	ms
DC/DC ON (Leave open if not used)		ON –Open or 0.3V<Vadj<1.25		
DC/DC OFF		OFF(shutdown) – Vadj<0.15		
Maximum Remote pin drive current	Vadj = 1.25V		1	mA
Quiescent Current in Shutdown mode	Vin = 30V, Vadj <0.15		0.25	mA
On/Off Control (Digital Control)		Max PWM Frequency 1KHz		
Minimum Switch ON/OFF time		200		ns
On/Off Control (Analog Dimming Control) (Leave open if not used)	Input voltage range	0.3-1.25		VDC
Drive with DC Voltage		0.3V < VADJ<1.25V to adjust output current from 25% to 100%		
Output current adjustment*	Vin-Vout<20			%
Control Voltage Range limits		ON – 0.2 – 0.3V (Vadj rise)		
		OFF – 0.15-0.25V (Vadj fall)		
Maximum Analog pin drive current	Vadj = 1.25V	25-100	1	mA

Output Specifications

Parameters	Conditions	Typical	Maximum	Units
Current accuracy		±6		%
Output Voltage range	V input = 30V	2-28		VDC
Output current	Vin – Vout >1.5V to 3V		300	mA
Short Circuit protection		Regulated at the rated current for each model		
Output no load Protection		Continuously		
Max load capacitance			47	µF
Temperature coefficient	Ta = -40 to +85°C	±0.05		%/°C
Ripple & Noise	20MHz Bandwidth	250		mV p-p

General Specifications

Parameters	Conditions	Typical	Maximum	Units
Switching frequency	100% load	40 - 380		KHz
Operating temperature		-40 to +85		°C
Storage temperature		-40 to +125		°C

General Specifications (continued)

Parameters	Conditions	Typical	Maximum	Units
Maximum case temperature			100	°C
Thermal Impedance	Free air convection	+40		°C/W
Cooling	Free air convection			
Humidity			95	% RH
Case material	Non-Conductive Black Plastic (UL94-V0 rated)			
Weight	2.6 (DIP14)			g
	6.2 (DIP 16)			
Dimensions (L x W x H)	DIP 14	0.80 x 0.40 x 0.27 inches	20.32 x 10.16 x 6.88 mm	
	DIP 16	0.80 x 0.40 x 0.40 inches	23.37 x 13.97 x 10.16 mm	
MTBF	> 500 000hrs (MIL-HDBK-217 F at +25 °C)			
Maximum Soldering Temperature	1.5mm from case for 10sec.		260	°C

NOTES:
1.Reversed polarity at the input power will damage the driver. The input ground must not be connected to the negative output.
2.Leave the pin VADJ opened if not used , grounding VADJ will shut the driver off, connecting VADJ to +Vin will damage the driver.
3.Maximum output open voltage is equal to input voltage

Safety Specifications

Parameters	
Agency approvals	CE
Standards	EN 55015 (CISPR22) IEC 61000-4-2 (Perf. Criteria A) IEC 61000-4-3 (Perf. Criteria A) IEC 61000-4-4 (Perf. Criteria A) IEC 61000-4-6 (Perf. Criteria A) IEC 61000-4-8 (Perf. Criteria A)

Pin Out Specifications

DIP 14

Pin	Single	
1	- V Input	- DC Supply
2	Vadj	PWM/ON/OFF or not used
7	- V Output	LED Cathode connection
8	+ V Output	LED Anode connection
14	+ V Input	+ DC Supply

DIP 16

Pin	Single	
1	- V Input	- DC Supply
2	- V Input	- DC Supply
3	Vadj	PWM/ON/OFF or not used
7	- V Output	LED Cathode connection
8	- V Output	LED Cathode connection
9	+ V Output	LED Anode connection
10	+ V Output	LED Anode connection
15	+ V Input	+ DC Supply
16	+ V Input	+ DC Supply

Derating

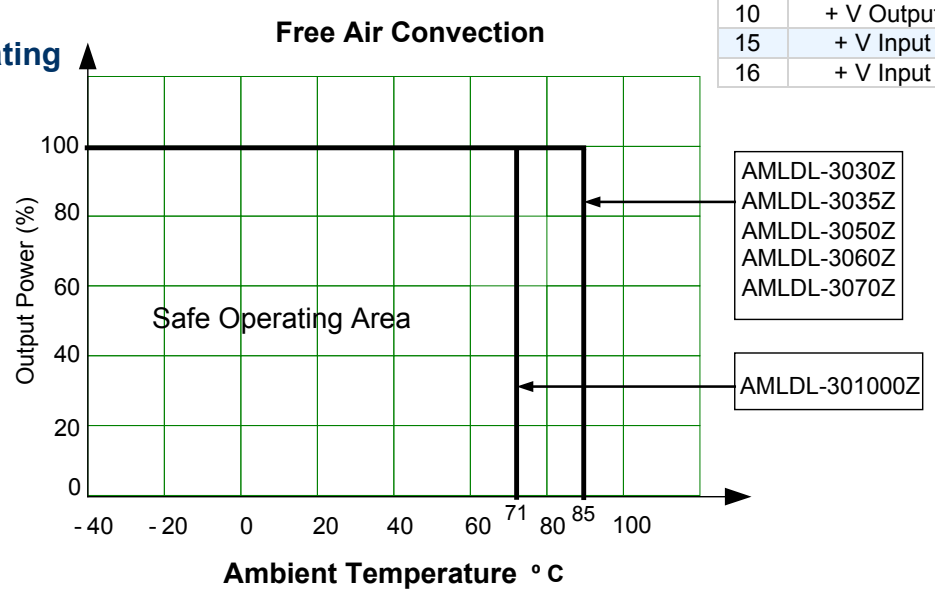

Dimensions

DIP 14: AMLDL-3030Z & AMLDL3035Z

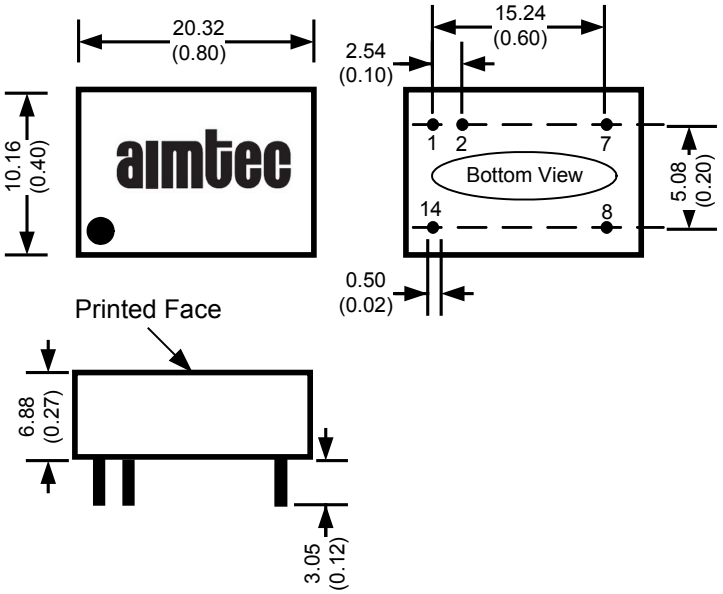

DIP 16: AMLDL-3050Z, AMLDL-3060Z, AMLDL-3070Z, AMLDL-30100Z

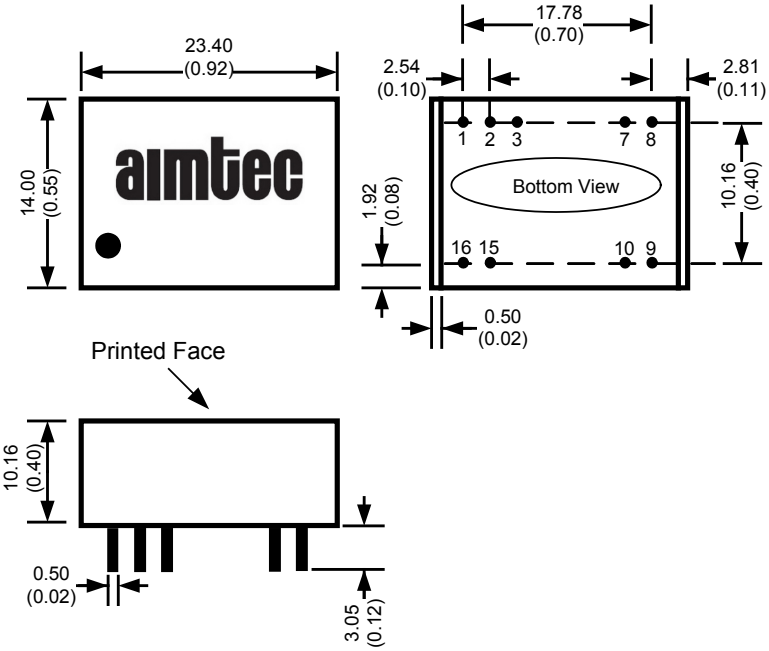

Application circuit examples:

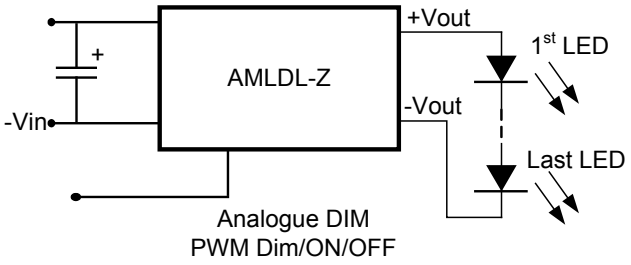

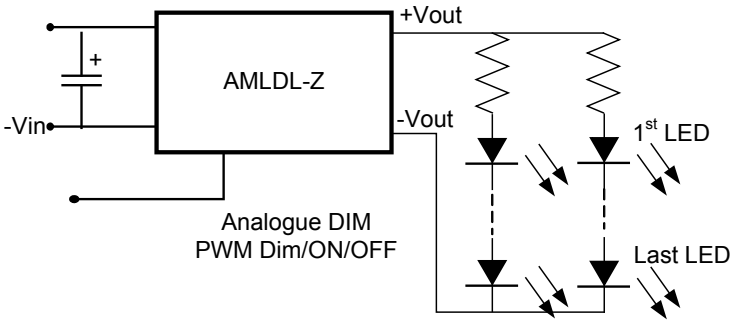

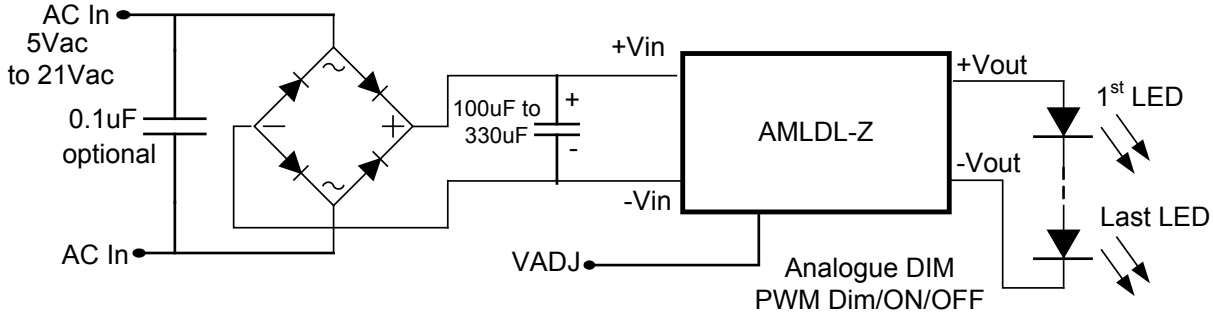

Output Current Adjustment by External DC Control Voltage:

The nominal output current is given by:

$$Iout \sim \frac{0.08 \times Vadj}{X}$$

Model Number	X
AMLDL-3030Z	0.327
AMLDL-3035Z	0.280
AMLDL-3050Z	0.197
AMLDL-3060Z	0.165
AMLDL-3070Z	0.1388
AMLDL-30100Z	0.095

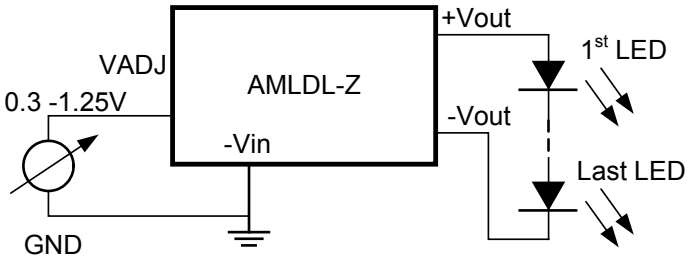

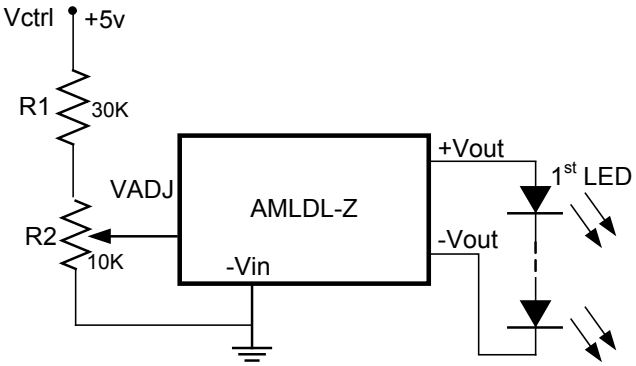

$$VADJ = \frac{R2}{R1 + R2} \times Vctrl$$

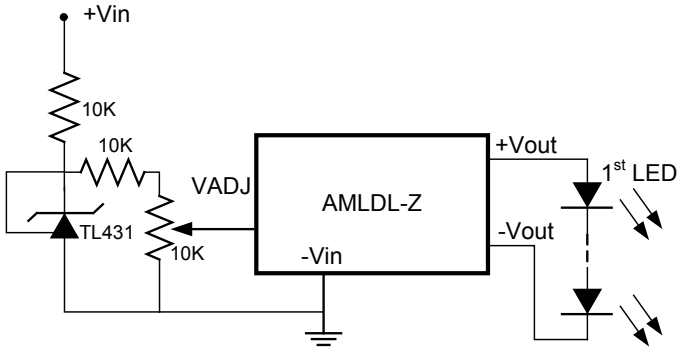

Resistive Dimming Control

A simplified dimming control can be achieved using a variable resistor connected between VADJ and GND. Capacitor CADJ is optional, it is installed to limit AC mains interference and high frequency noise. The recommended value of CADJ is 0.22µF.

The nominal output current is given by:

$$Ioutnom = \frac{Iout \times Radj}{Radj + 200K}$$

NOTE: Typical error is ±10% with resistive dimming control

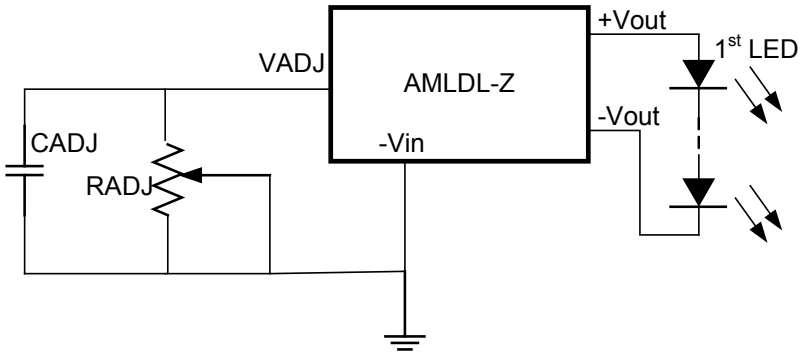

Output Current Adjustment by PWM Control:
Driving VADJ Directly

A Pulse Width Modulated (PWM) signal with a duty cycle of DPWM can be applied directly to VADJ pin as shown below.

The output current is given by:

$$Iout \sim \frac{0.1 \times DPWM}{X} \quad [for\ 0<DPWM<1]$$

Model Number	X
AMLDL-3030Z	0.327
AMLDL-3035Z	0.280
AMLDL-3050Z	0.197
AMLDL-3060Z	0.165
AMLDL-3070Z	0.1388
AMLDL-30100Z	0.095

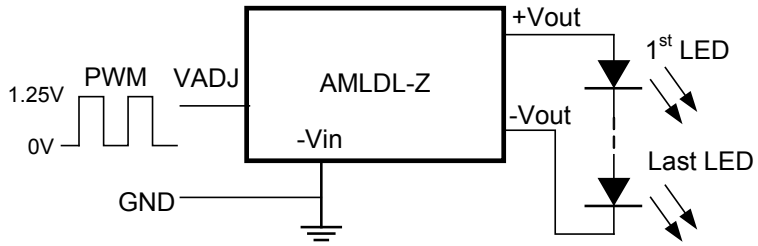

Driving VADJ Via Open Collector Transistor

The VADJ can also be driven via an open collector transistor as shown below.
The diode and resistor serve to suppress any possible high amplitude negative voltage spikes to the VADJ input resulting from the collector to emitter capacitance of the transistor. Any negative voltage spikes will cause errors in output current and/or unstable driver operation.

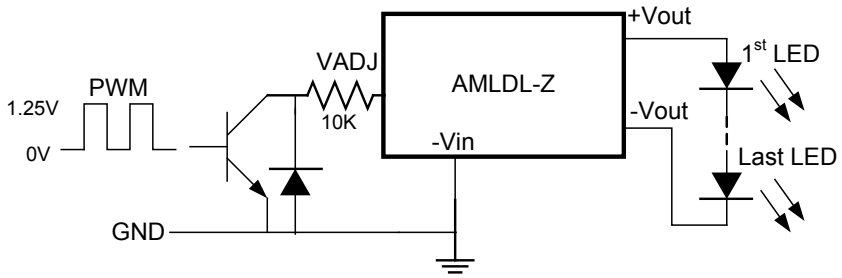

Driving the VADJ from a Microcontroller

The VADJ can be driven from an open drain output of a microcontroller as shown below. The diode and resistor serve to suppress any possible high amplitude negative voltage spikes to the VADJ input resulting from the drain to source capacitance of the FET. Any negative voltage spikes will cause errors in output current and/or unstable driver operation.

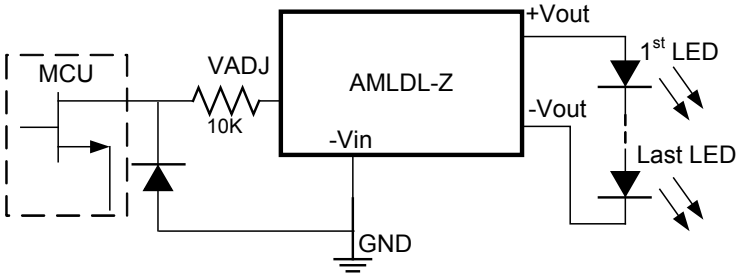

Output Current Adjustment by PWM Control (Dimming):

A PWM signal must have a frequency of greater than 100Hz to prevent any visible flicker.

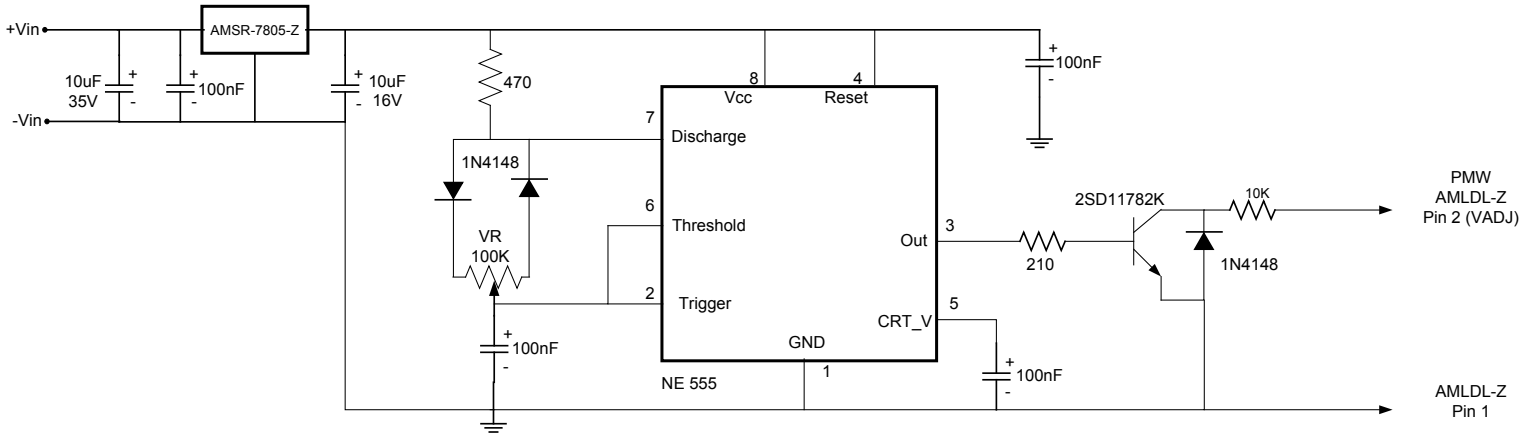

Output Current Adjustment by PWM Control (Flash):

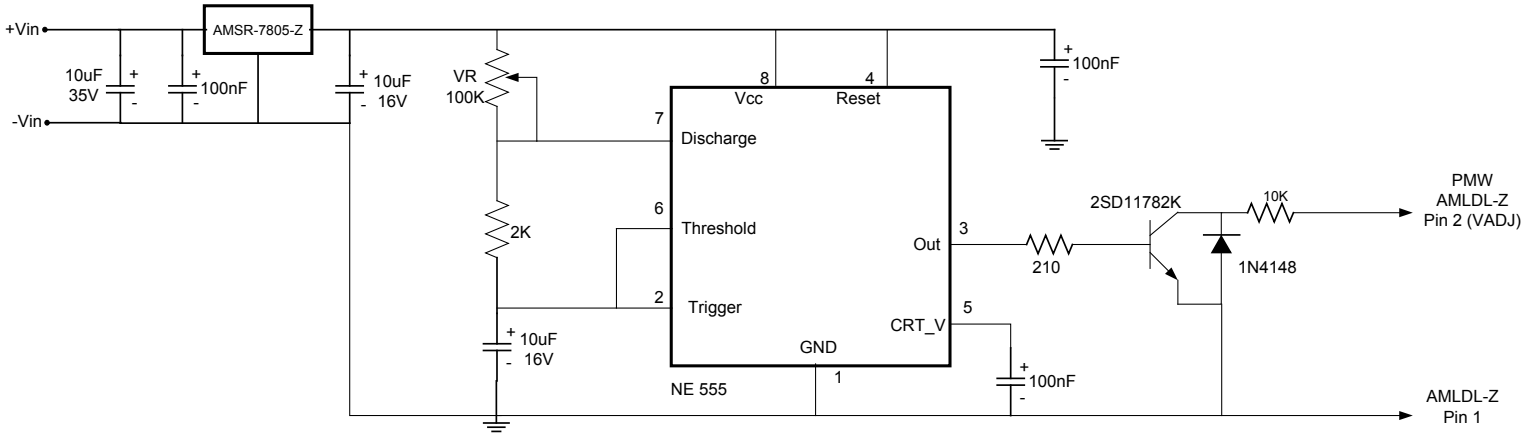

Recommended Class B EMI Filter:

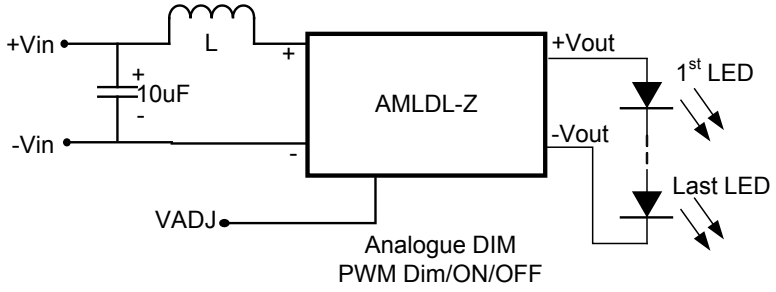

Model Number	Inductor Value (µH)
AMLDL-3030Z	68
AMLDL-3035Z	68
AMLDL-3050Z	27
AMLDL-3060Z	27
AMLDL-3070Z	27
AMLDL-30100Z	27

Thermal Feedback Circuit

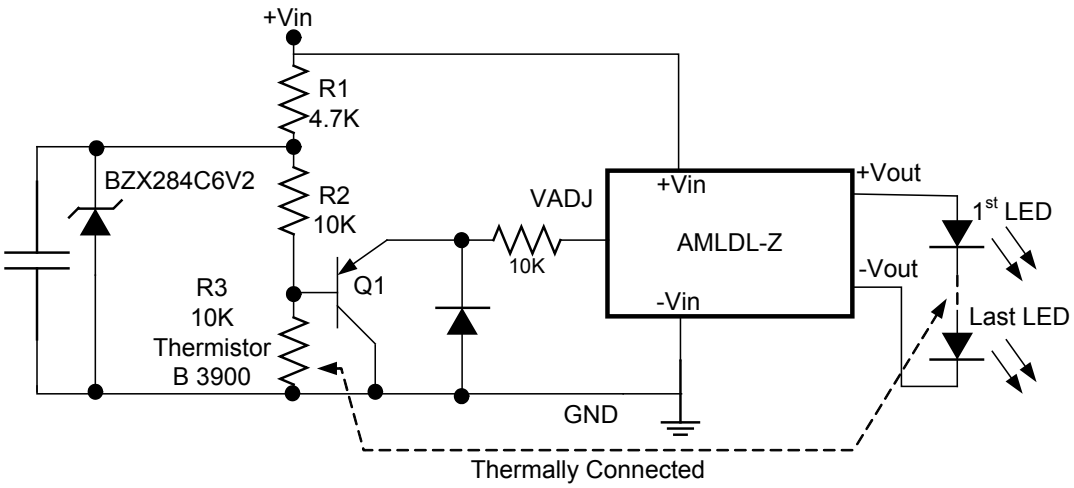

The selection of components for the thermal feedback circuit is depends on the choice of R2 and R3 and the effectiveness of the LED heatsink. To optimize the LED brightness control at high temperatures, the LEDs must have a sufficient thermal extraction path, if not the reduction in drive current will not be optimal.

The thermal control threshold points are set by adjusting R2. Three values (33K, 22K, and 10K) were tested. These values were chosen to provide thermal break points of approximately 25ºC, 40ºC, and 60ºC.

Note, that the LED drive current will not continually dim to zero – the thermal controls applying DC control to that VADJ pin has a dimming ratio from maximum current of approximately 5:1.

Once the reduced DC level drops below the shutdown threshold of around 200mV, the LED drive current will fall to zero and the LEDs will be off.

The slope of the current reduction is determined by the beta value of the thermistor. The larger the Beta value the sharper will be the resultant current control response. The slope of the current reduction is also affected by Q1's base emitter voltage variation with temperature.

Output Current Adjustment By External DC Control Voltage:

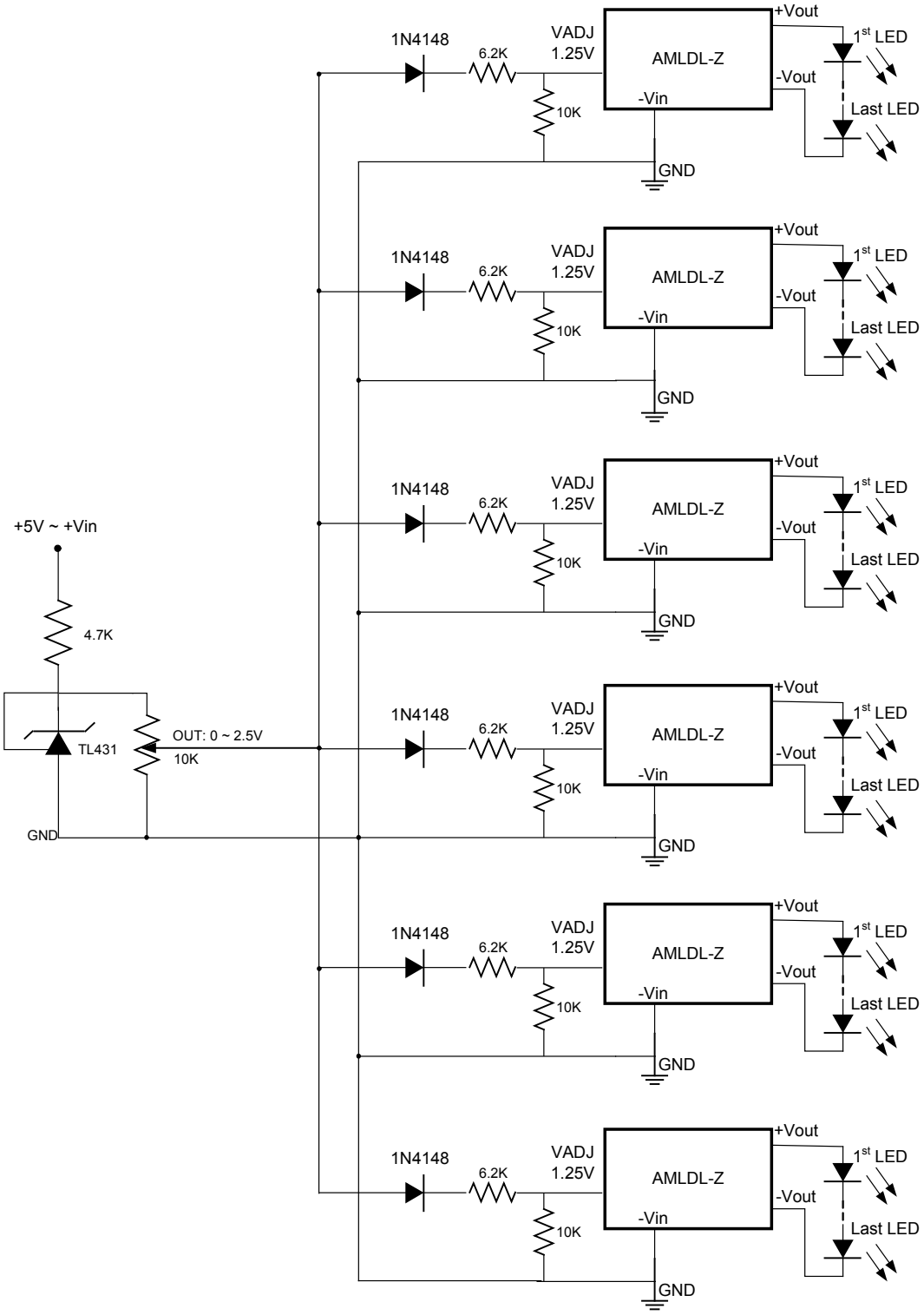

Typical Characteristics:

AMLDL-3030Z

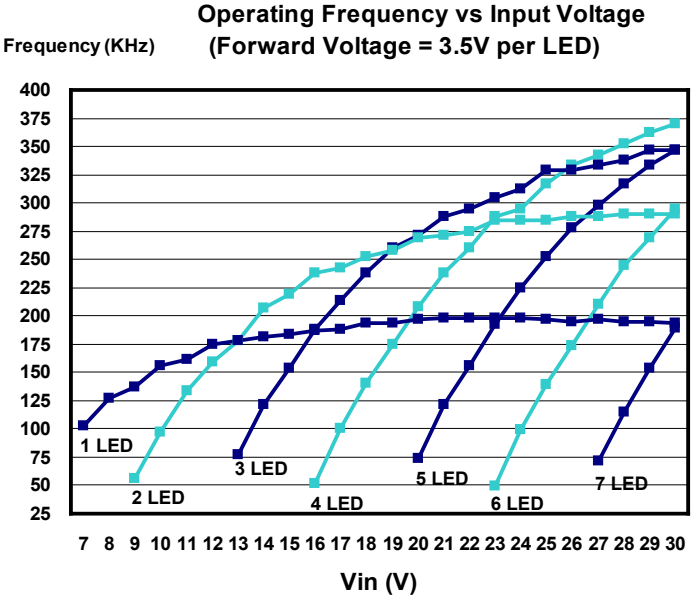

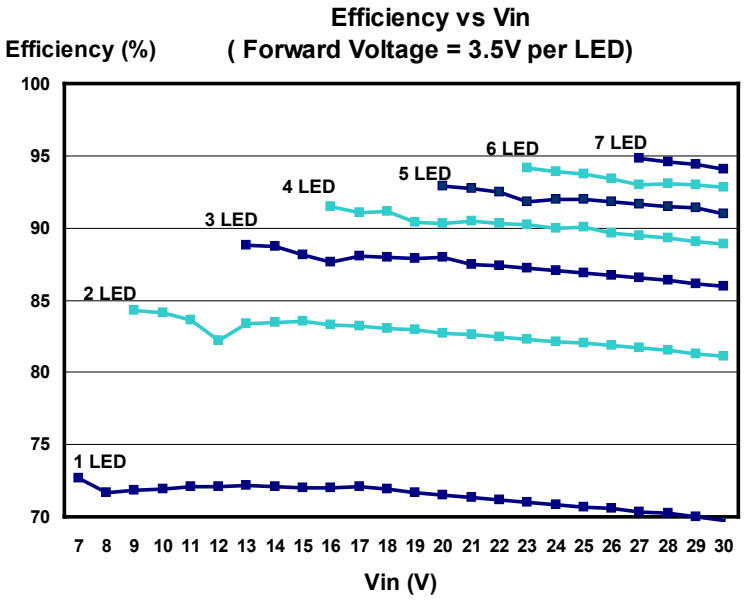

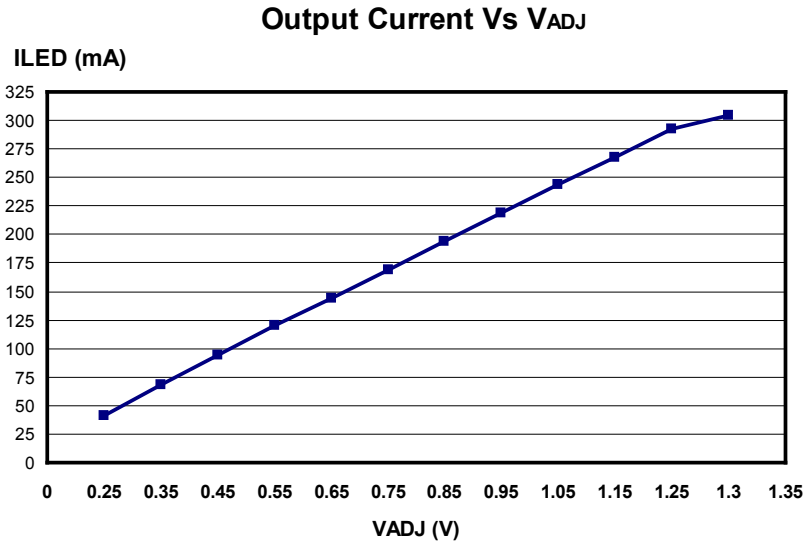

Typical Characteristics: AMLDL-3035Z

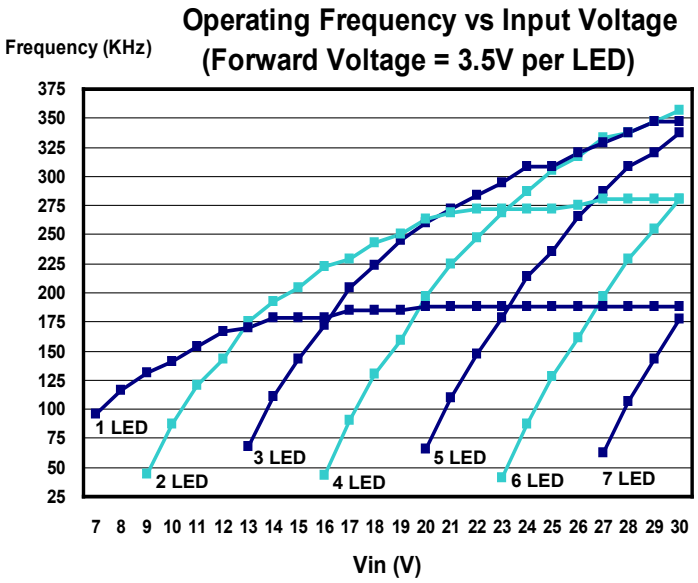

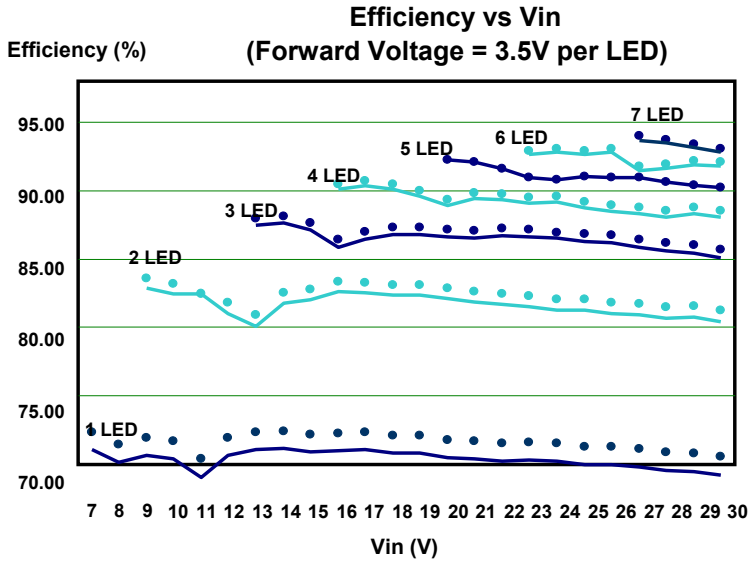

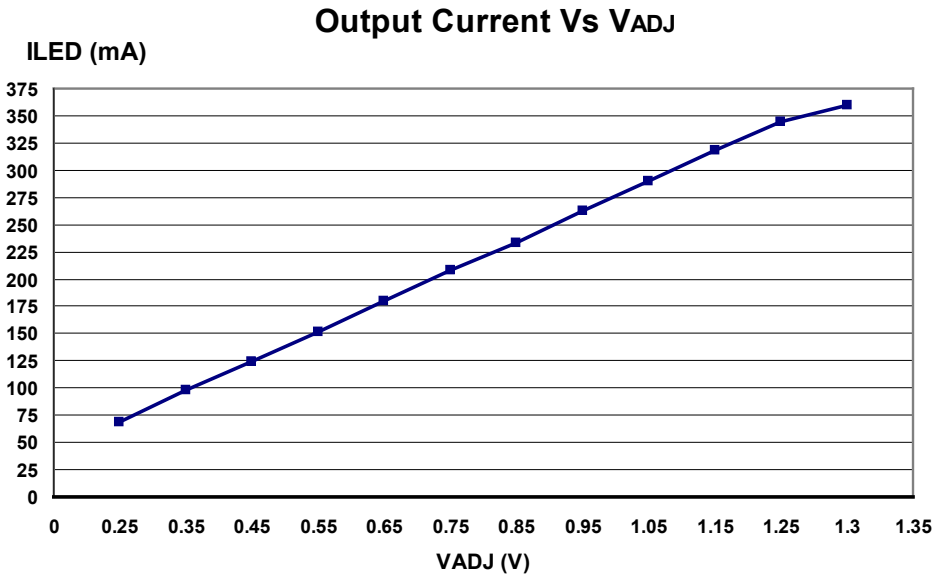

Typical Characteristics: AMLDL-3050Z

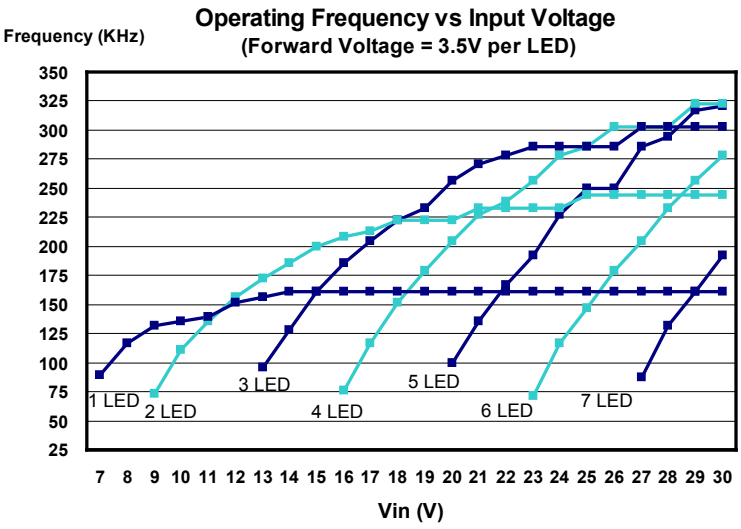

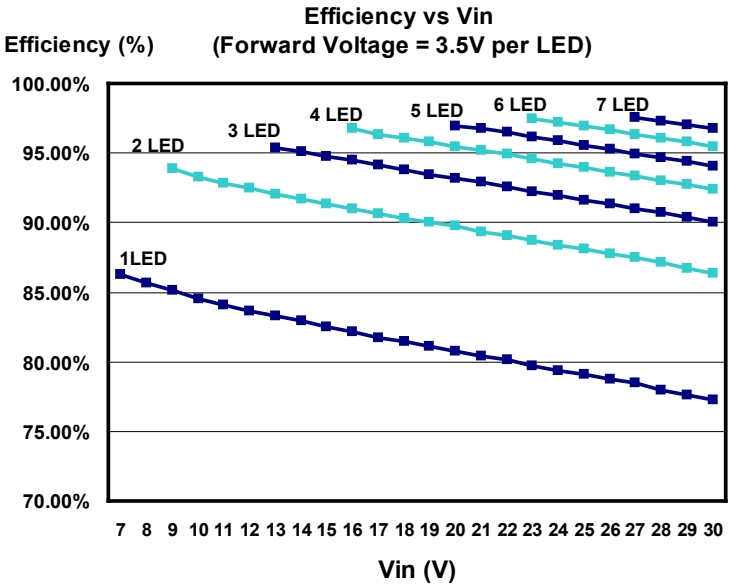

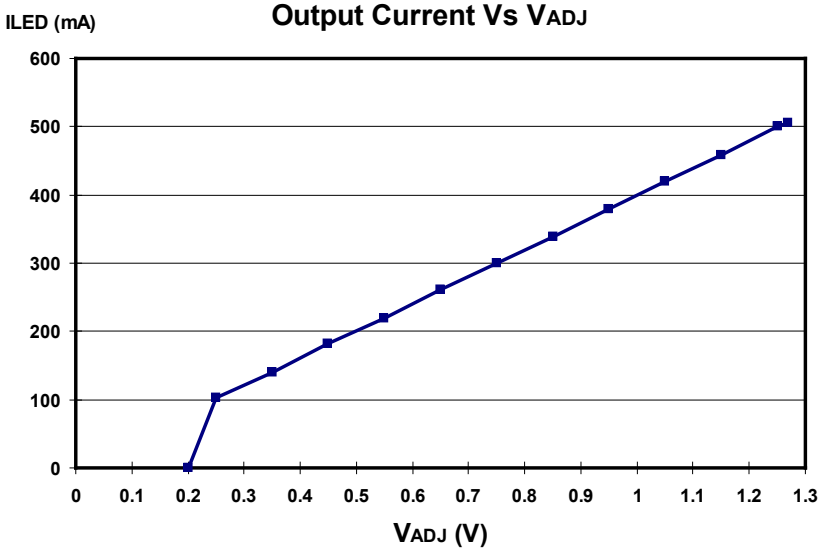

Typical Characteristics: AMLDL-3060Z

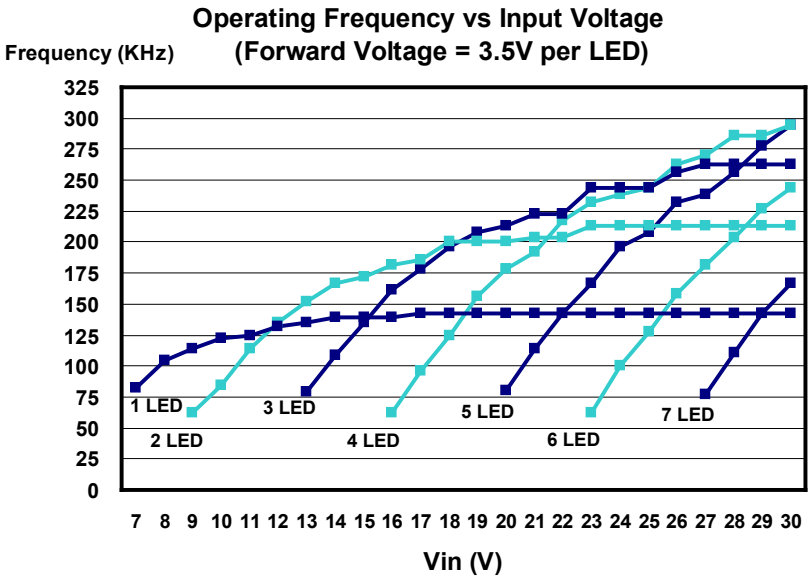

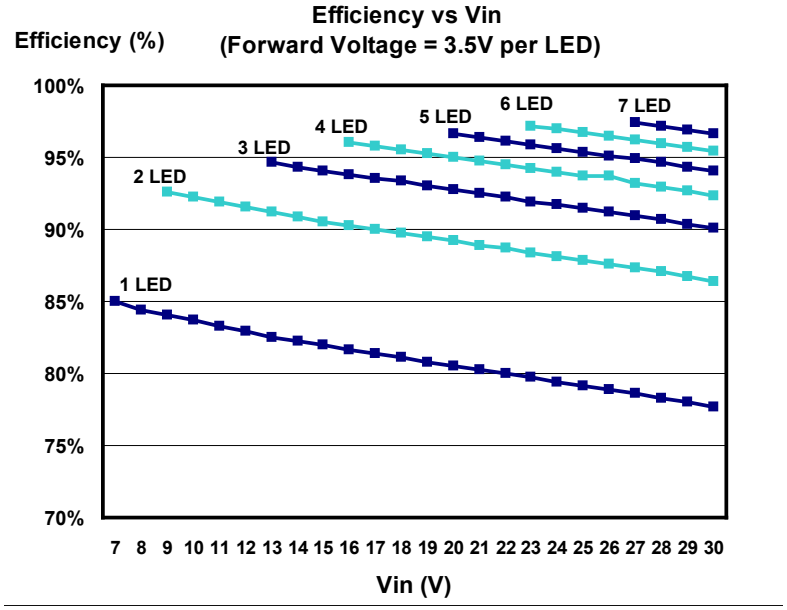

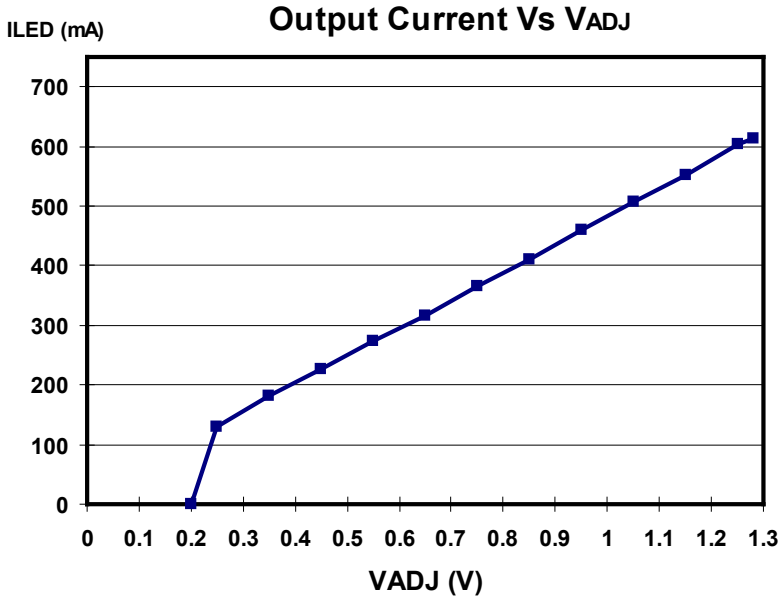

Typical Characteristics: AMLDL-3070Z

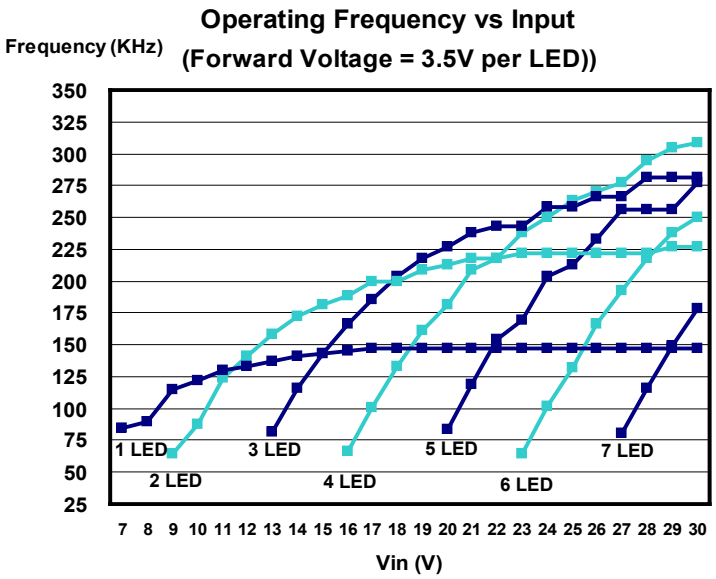

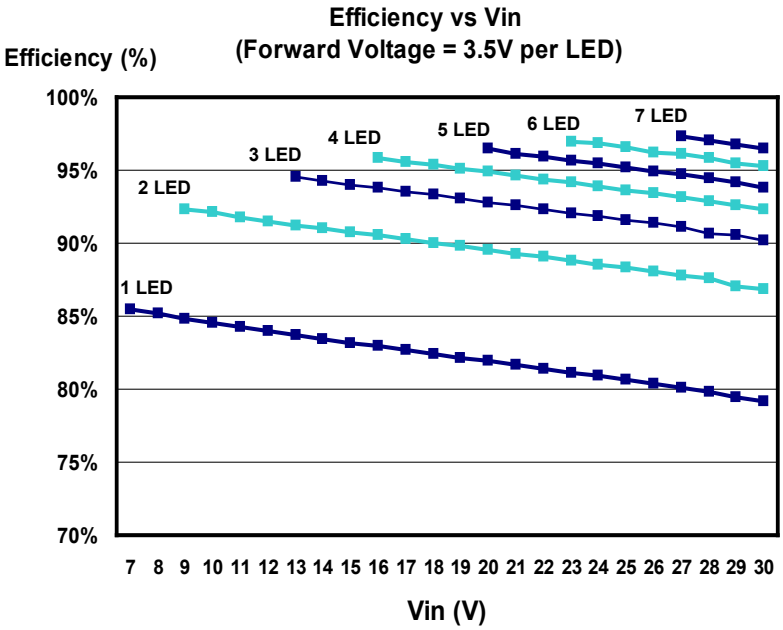

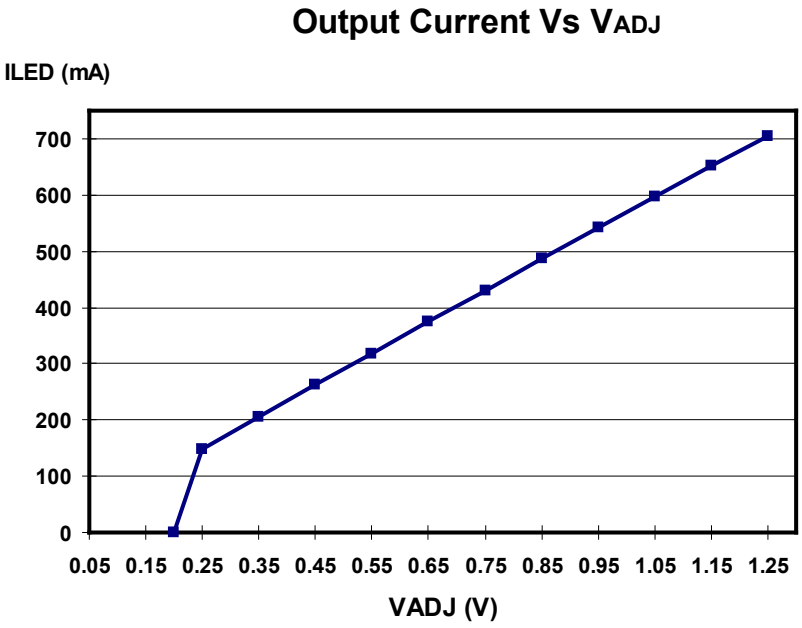

Typical Characteristics: AMLD-30100Z

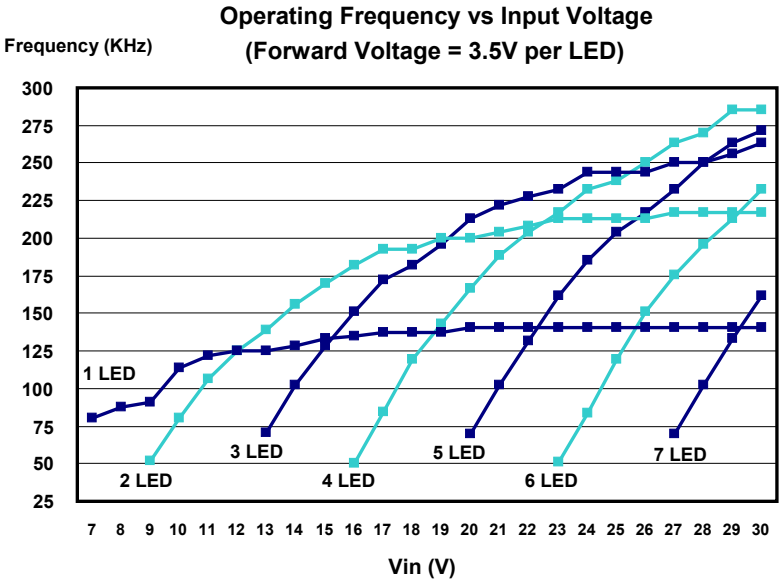

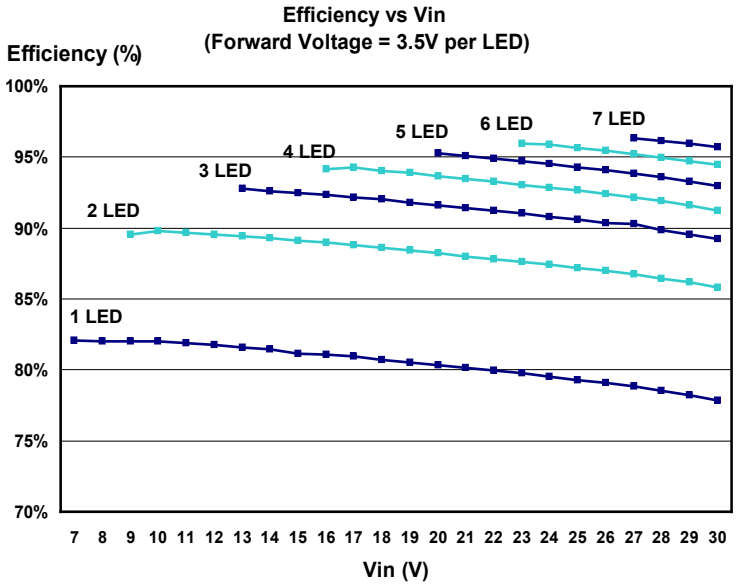

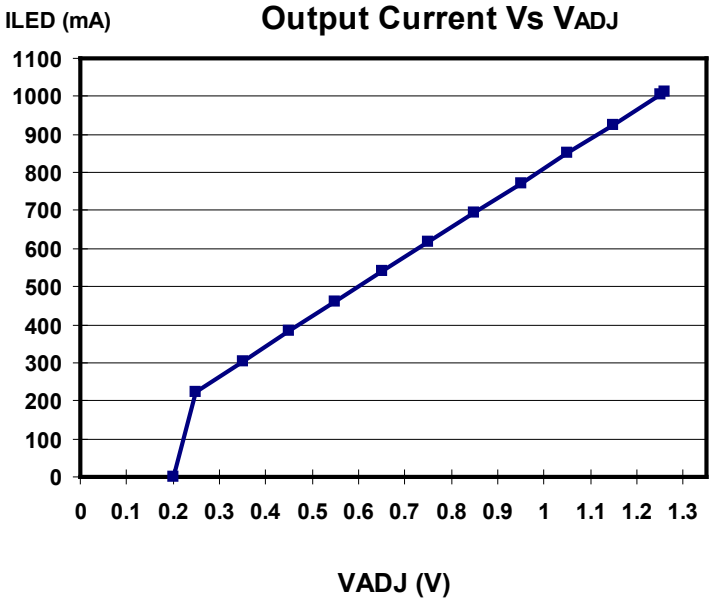

NOTE: 1. Datasheets are updated as needed and as such, specifications are subject to change without notice. Once printed or downloaded, datasheets are no longer controlled by Aimtec; refer to www.aimtec.com for the most current product specifications. **2.** Product labels shown, including safety agency certifications on labels, may vary based on the date manufactured. **3.** Mechanical drawings and specifications are for reference only. **4.** All specifications are measured at an ambient temperature of 25°C, humidity<75%, nominal input voltage and at rated output load unless otherwise specified. **5.** Aimtec may not have conducted destructive testing or chemical analysis on all internal components and chemicals at the time of publishing this document. CAS numbers and other limited information are considered proprietary and may not be available for release. **6.** This product is not designed for use in critical life support systems, equipment used in hazardous environments, nuclear control systems or other such applications which necessitate specific safety and regulatory standards other the ones listed in this datasheet. **7.** Warranty is in accordance with Aimtec's standard Terms of Sale available at www.aimtec.com.