1.0 General Description

The AMIS-710224-A6 (PI224-MC-A6) is a contact imaging sensor (CIS) module composed of 13 AMIS-720033 (PI3020) image sensor chips. The AMIS-720033 is a 200 dots per inch (dpi) solid-state line imaging array, also a product of AMI Semiconductor. This imaging device is fabricated using MOS imaging sensor technology for high-speed performance and high sensitivity. The AMIS-710224-A6 is suitable for scanning A6 size (104mm) documents with 8 dots per millimeter (dpm) resolution. Applications include ticket, check and card scanners, variety of mark readers, and other automation equipment.

2.0 Key Features

- Light source, lens and sensor are integrated into a single module
- 8dpm resolution, 104mm scanning length
- High speed page scan - up to 167μsec/line @ 5MHz pixel rate
- Wide dynamic range
- Analog output
- Ultra bright Yellow-Green light source
- Compact size ≅ 14mm x 19mm x 120mm
- Low power
- Light weight

3.0 Functional Description

The AMIS-710224-A6 imaging array consists of 13 sensors that are cascaded to provide 832 photo-detectors with their associated multiplex switches and a digital shift register that controls its sequential readout. Mounted in the module is one-to-one graded indexed micro lens array that focuses the scanned documents to image onto its sensing plane. The on-board amplifier processes the video signal to produce a sequential stream of video at the video output pin of the AMIS-710224-A6 module.

Illumination is accomplished by means of an integrated LED light source. All components are housed in a small plastic housing which has a cover glass which acts as the focal point for the object being scanned and protects the imaging array, micro lens assembly and LED light source from dust. I/O to the module is the 10-pin connector located on one end of the module. The cross section of the AMIS-710224-A6 is shown in Figure 1 and the block diagram in Figure 2.

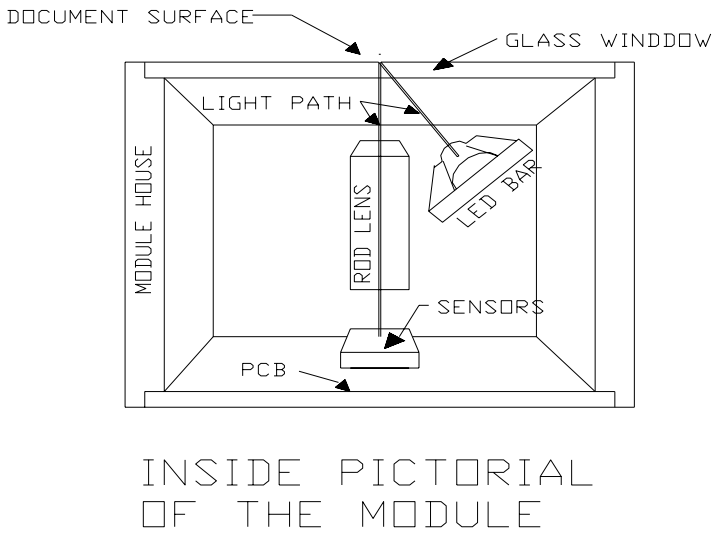

Figure 1: Inside Pictorial of the Module

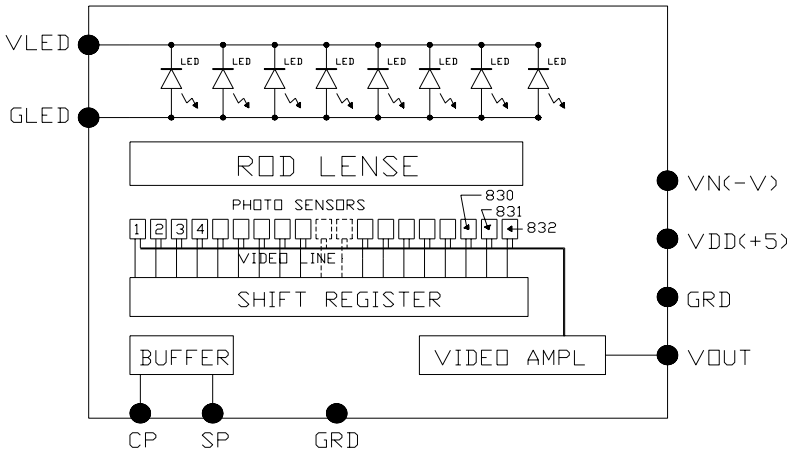

Figure 2: AMIS-710224-A6 Module Block Diagram

Table 1: Pin Configuration

Pin Number	Symbol	Names and Functions
1	Vout	Analog video output
2	Gnd	Ground; 0V
3	Vdd (+5V)	Positive power supply
4	Vn (-5V to -12V)	Negative power supply
5	Gnd	Ground; 0V
6	SP	Shift register start pulse
7	Gnd	Ground; 0V
8	CP	Sampling clock pulse
9	GLED	Ground for the light source; 0V
10	VLED	Supply for the light source

4.0 Absolute Maximum Ratings

Table 2: Absolute Maximum Ratings

Parameter	Symbols	Maximum Rating	Units
Power supply voltage	Vdd	7.5	V
	Idd	40	ma
	Vn	-15	V
	In	15	ma
	VLED	5.5	V
	ILED	500	ma
Input clock pulse (high level)	Vih	Vdd – 0.5	V
Input clock pulse (low level)	Vil	-0.6	V

Table 3: Operating Environment

Parameter	Symbols	Maximum Rating	Units
Operating temperature	Top	0 to 50	˚C
Operating humidity	Hop	10 to 85	%
Storage temperature	Tstg	-25 to +75	˚C
Storage humidity	Hstg	5 to 95	%

5.0 Electro-Optical Characteristics (25°C)

Table 4: Electro-Optical Characteristics at 25°C

Parameter	Symbol	Parameter	Units	Note
Number of photo detectors		832	Elements	
Pixel-to-pixel spacing		125	µm	
Line scanning rate	Tint(1)	180	µsec	Tested @ 5MHz clock frequency
Clock frequency(2)	f	5	MHz	
Bright output voltage(3)	Video output	1.0	V	Test at Tint = 180us
Bright output non-uniformity(4)	Up	<+/-30	%	
Adjacent pixel non-uniformity(5)	Uadj	<25	%	
Dark non-uniformity(6)	Ud	<20	mV	
Dark output voltage	Vd	<200	mV	
Modulation transfer function(7)	MTF	>50	%	See Note 7 for MTF & DOF

Definition:

1. Tint: line scanning rate or integration time; tint is determined by the interval of two SP. The module was tested at 180us, but it will operate to 167us with a clocking speed of 5.0MHz.
2. f: main clock frequency The module was tested at 5.0MHz, but electrically it reliably operates above 5.0MHz, but with a minimum integration time of 167µsec.
3. Vpavg = ∑ Vp(n)/832
4. Up = [(Vpmax - Vp) / Vp] x 100% or [(Vp - Vpmin) / Vp] x 100%
5. Upadj = MAX[| (Vp(n) - Vp(n+l) | / Vp(n)] x 100%
   Upadj is the non-uniformity percentage pixel to pixel.
6. Ud = Vdmax – Vdmin
   Vdmin is the minimum output on a black document(O.D.= 0.8).
   Vdmax: maximum output voltage of black document (O.D.= 0.8).
7. MTF = [(Vmax - Vmin) / (Vmax + Vmin)] x 100 [%]. DOF range is defined with the MTF.
   MTF is measure at glass surface and at 0.4mm from the glass > 50 % and peaks at approximately mid-point of 0.2mm.
   Vmax: maximum output voltage at 50 lp/inch (At 1/2 of the optical Nyquest frequency).
   Vmin: minimum output voltage at 50lp/inch.
8. O.D. = optical Density
9. lp / inch: line pair per inch

Table 5: Recommended Operating Conditions (25°C)

Item	Symbol	Min.	Mean(1)	Max.	Units
Power supply	Vdd	4.5	5.0	5.5	V
	Vn	-4.5	-5	-12	V
	VLED		5	5.5	V
	Idd		30	40	ma
	In		6	15	ma
	ILED		300	450	ma
Input voltage at digital high	Vih	Vdd-1.0	Vdd-0.5	Vdd	V
Input voltage at digital low	Vil	0		0.6	V
Clock frequency	f			5.0(2)	MHz
Clock pulse high duty cycle		25			%
Clock pulse high duration		50			ns
Integration time	Tint(3)	0.167		5.0	ms
Operating temperature	Top		25	50	°C

Notes:

1. Tested at 5.0MHz and 180us
2. Also used as test frequency
3. Tint (min.) is the lowest line integration time available at 5.0MHz clock rate.

6.0 Switching Characteristics (25°C)

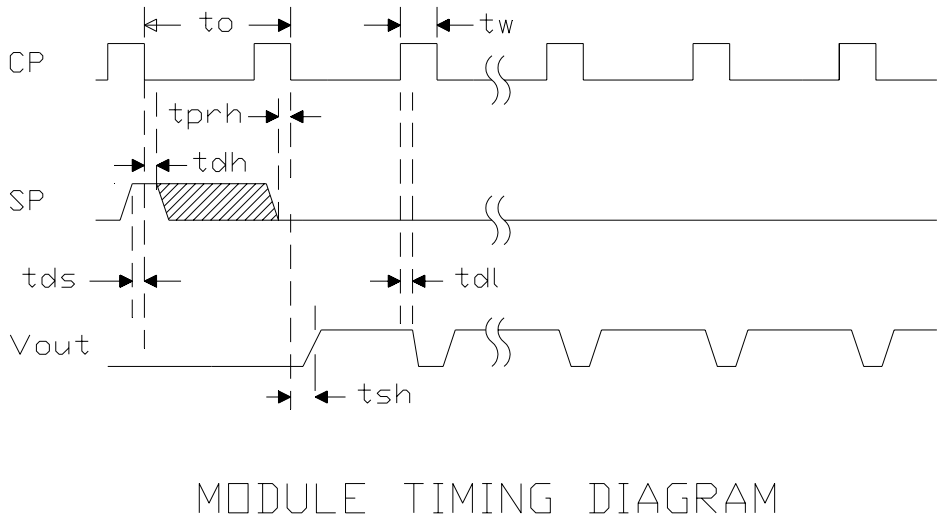

Figure 3: Clock and Start Pulse Timing Diagram

The switching characteristics for the I/O clocks are shown in Figure 3. Its corresponding definition for the timing symbols are given in Table 6.

Table 6: Symbol Definition for the Above Timing Diagram

Item	Symbol	Min.	Typ.	Max.	Units
Clock cycle time	to	0.2		4.0	µs
Clock pulse width	tw	50			ns
Clock duty cycle		25		75	%
Prohibit crossing time of Start Pulse	tprh	15			ns
Data setup time	tds	20			ns
Data hold time	tdh	20			ns
Signal delay time	tdl	50			ns
Signal settling time	tsh	120			ns

7.0 AMIS-710224-A6 Module and its Mechanical Dimensions

The sketch of this module is to provide a pictorial of the module size and structure. A detailed drawing is available upon request.

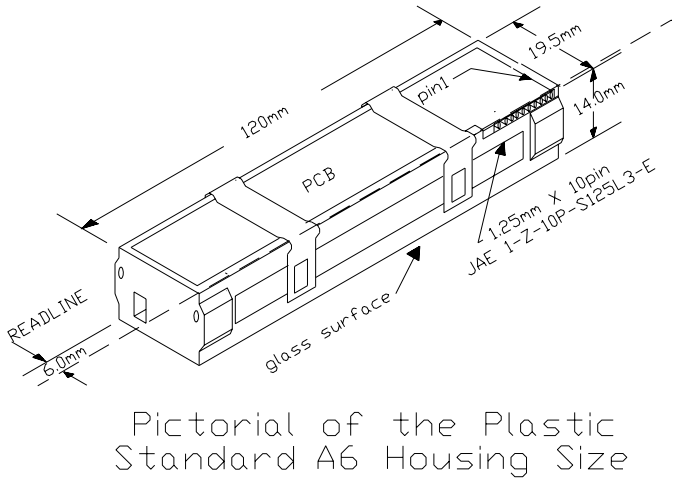

Figure 4: Pictorial of the Plastic Standard A6 Housing Size

8.0 Company or Product Inquiries

For more information about AMI Semiconductor, our technology and our product, visit our Web site at: http://www.amis.com

North America
Tel: +1.208.233.4690
Fax: +1.208.234.6795

Europe
Tel: +32 (0) 55.33.22.11
Fax: +32 (0) 55.31.81.12

Production Technical Data - The information contained in this document applies to a product in production. AMI Semiconductor and its subsidiaries ("AMIS") have made every effort to ensure that the information is accurate and reliable. However, the characteristics and specifications of the product are subject to change without notice and the information is provided "AS IS" without warranty of any kind (express or implied). Customers are advised to obtain the latest version of relevant information to verify that data being relied on is the most current and complete. AMIS reserves the right to discontinue production and change specifications and prices at any time and without notice. Products sold by AMIS are covered by the warranty and patent indemnification provisions appearing in its Terms of Sale only. AMIS makes no other warranty, express or implied, and disclaims the warranties of noninfringement, merchantability, or fitness for a particular purpose. AMI Semiconductor's products are intended for use in ordinary commercial applications. These products are not designed, authorized, or warranted to be suitable for use in life-support systems or other critical applications where malfunction may cause personal injury. Inclusion of AMIS products in such applications is understood to be fully at the customer's risk. Applications requiring extended temperature range, operation in unusual environmental conditions, or high reliability, such as military or medical life-support, are specifically not recommended without additional processing by AMIS for such applications. Copyright © 2006 AMI Semiconductor, Inc.