ON Semiconductor®

AMIS-30624
I²C Micro-stepping Motor Driver

1.0 General Description

The AMIS-30624 is a single-chip micro-stepping motor driver with a position controller and control/diagnostic interface. It is ready to build intelligent peripheral systems where up to 32 drivers can be connected to one I²C master. This significantly reduces system complexity.

The chip receives positioning instructions through the bus and subsequently drives the stator coils so the two-phase stepper motor moves to the desired position. The on-chip position controller is configurable (OTP or RAM) for different motor types, positioning ranges and parameters for speed, acceleration and deceleration. Micro-stepping allows silent motor operation and increased positioning resolution. The advanced motion qualification mode enables verification of the complete mechanical system in function of the selected motion parameters. The AMIS-30624 can easily be connected to an I²C bus where the I²C master can fetch specific status information like actual position, error flags, etc. from each individual slave node.

An integrated sensorless stall detection stops the motor when running into stall. This enables silent, yet accurate position calibrations during a referencing run and allows semi-closed loop operation when approaching the mechanical end-stops.

The chip is implemented in I2T100 technology, enabling both high voltage analog circuitry and digital functionality on the same chip. The AMIS-30624 is fully compatible with the automotive voltage requirements.

2.0 Product Features

Motor Driver
- Micro-stepping technology
- Sensorless stall detection
- Peak current up to 800mA
- Fixed frequency PWM current-control
- Selectable PWM frequency
- Automatic selection of fast and slow decay mode
- No external fly-back diodes required
- 14V/24V compliant
- Motion qualification mode

Controller with RAM and OTP memory
- Position controller
- Configurable speeds and acceleration
- Input to connect optional motion switch

I²C interface
- Bi-directional 2-wire bus for Inter IC Control
- Field programmable node addresses
- Full diagnostics and status information

Protection
- Over-current protection
- Under-voltage management
- Open circuit detection
- High-temp warning and management
- Low-temp flag

EMI compatibility
- High voltage outputs with slope control
- HV outputs with slope control

©2008 SCILLC. All rights reserved.
June 2008 – Rev. 4

Publication Order Number:
AMIS30624/D

3.0 Applications

The AMIS-30624 is ideally suited for small positioning applications. Target markets include: automotive (headlamp alignment, HVAC, idle control, cruise control), industrial equipment (lighting, fluid control, labeling, process control, XYZ tables, robots) and building automation (HVAC, surveillance, satellite dish, renewable energy systems). Suitable applications typically have multiple axes or require mechatronic solutions with the driver chip mounted directly on the motor.

4.0 Ordering Information

Table 1: Ordering Information

Part Number	Package	Shipping Configuration	Temperature Range	Peak Current
AMIS30624C6244G	SOIC-20	Tube/Tray	-40°C…..125°C	800mA
AMIS30624C6244RG	SOIC-20	Tape & Reel	-40°C…..125°C	800mA
AMIS30624C6245G	NQFP-32 (7 x 7 mm)	Tube/Tray	-40°C…..125°C	800mA
AMIS30624C6245RG	NQFP-32 (7 x 7 mm)	Tape & Reel	-40°C…..125°C	800mA

5.0 Quick Reference Data

Table 2: Absolute Maximum Ratings

Parameter		Min.	Max.	Unit
Vbb	Supply voltage	-0.3	+40 (1)	V
Tamb	Ambient temperature under bias (2)	-50	+150	°C
Tst	Storage temperature	-55	+160	°C
Vesd (3)	Electrostatic discharge voltage on pins	-2	+2	kV

Notes:
(1) For limited time <0.5s
(2) The circuit functionality is not guaranteed.
(3) Human body model (100pF via 1.5 kΩ, according to JEDEC EIA-JESD22-A114-B)

Table 3: Operating Ranges

Parameter			Min.	Max.	Unit
Vbb	Supply voltage		+8	+29	V
Top	Operating temperature range	Vbb ≤ 18V	-40	+125	°C
		Vbb ≤ 29V	-40	+85	°C

6.0 Block Diagram

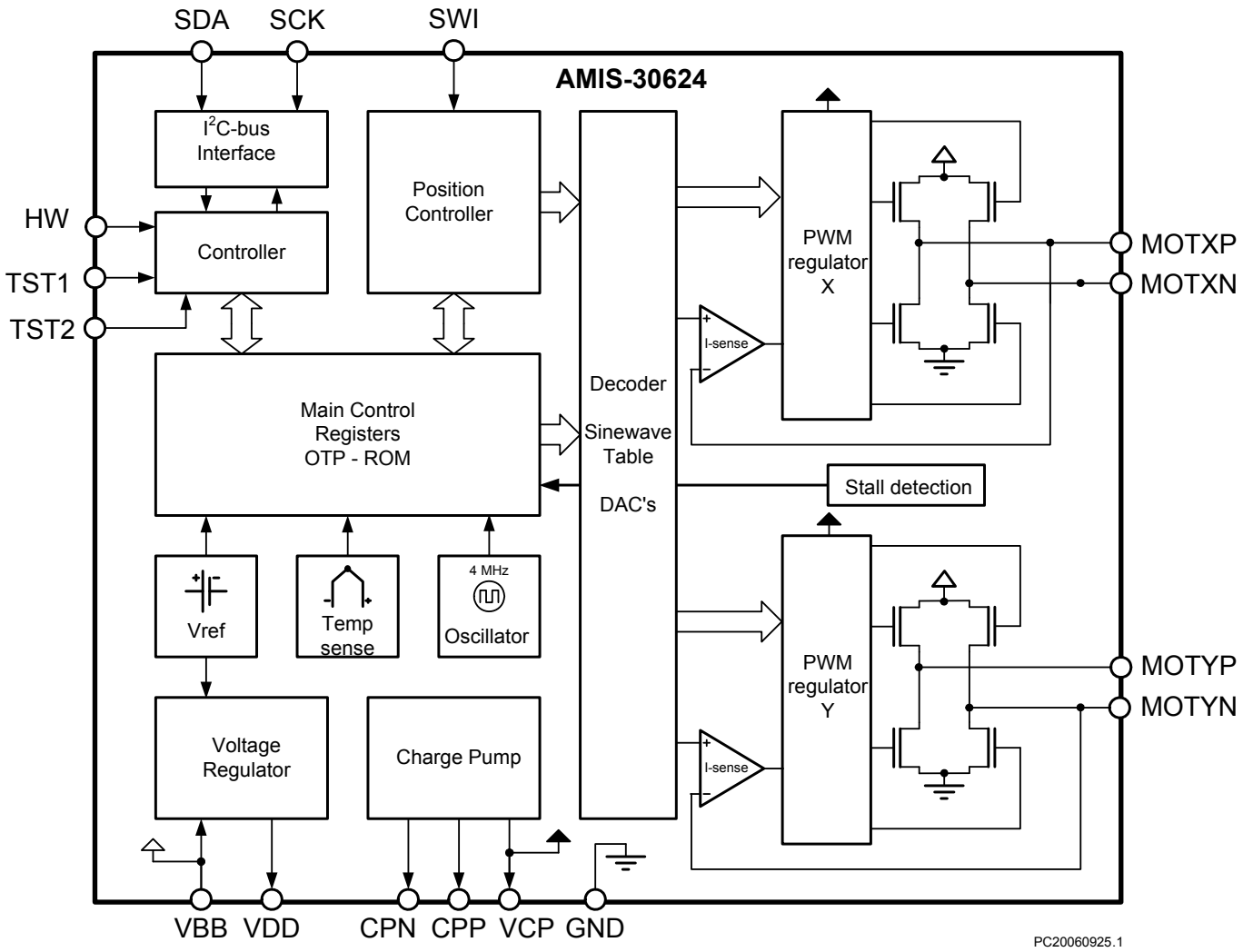

Figure 1: Block Diagram

7.0 Pin Out

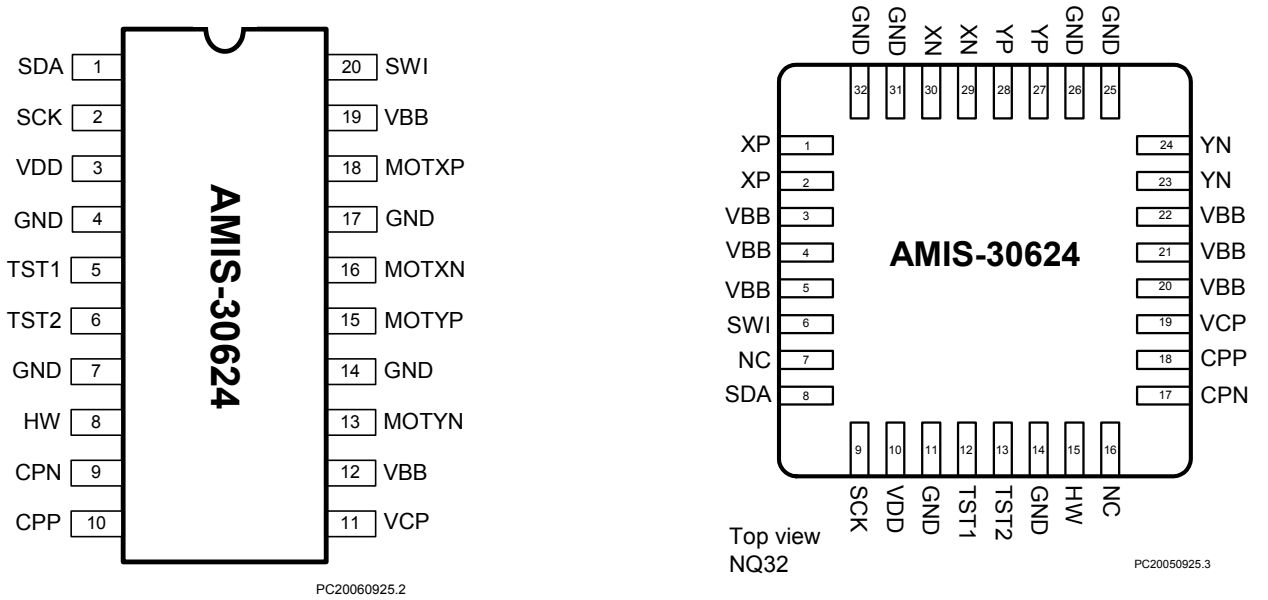

Figure 2: SOIC 20 and NQFP-32 Pin-out

Table 4: Pin Description

Pin Name	Pin Description	SOIC-20	NQFP-32
SDA	I^2C serial data line	1	8
SCK	I^2C serial clock line	2	9
VDD	Internal supply (needs external decoupling capacitor)	3	10
GND	Ground, heat sink	4,7,14,17	11, 14, 25, 26, 31, 32
TST1	Test pin (to be tied to ground in normal operation)	5	12
TST2	Test pin (to be left open in normal operation: internally pulled up)	6	13
HW	Hard wired address bit	8	15
CPN	Negative connection of pump capacitor (charge pump)	9	17
CPP	Positive connection of pump capacitor (charge pump)	10	18
VCP	Charge-pump filter-capacitor	11	19
VBB	Battery voltage supply	12,19	3, 4, 5, 20, 21, 22
MOTYN	Negative end of phase Y coil	13	23, 24
MOTYP	Positive end of phase Y coil	15	27, 28
MOTXN	Negative end of phase X coil	16	29, 30
MOTXP	Positive end of phase X coil	18	1, 2
SWI	Switch input	20	6
NC	Not connected (to be tied to ground)		7, 16

8.0 Package Thermal Resistance

8.1 SOIC-20

To lower the junction-to-ambient thermal resistance, it is recommended to connect the ground leads to a printed circuit board (PCB) ground plane layout as illustrated in Figure 3. The junction-to-case thermal resistance is dependent on the copper area, copper thickness, PCB thickness and number of copper layers. Calculating with a total area of 460 mm^2, 35µm copper thickness, 1.6mm PCB thickness and 1 layer, the thermal resistance is 28°C/W; leading to a junction-ambient thermal resistance of 63°C/W.

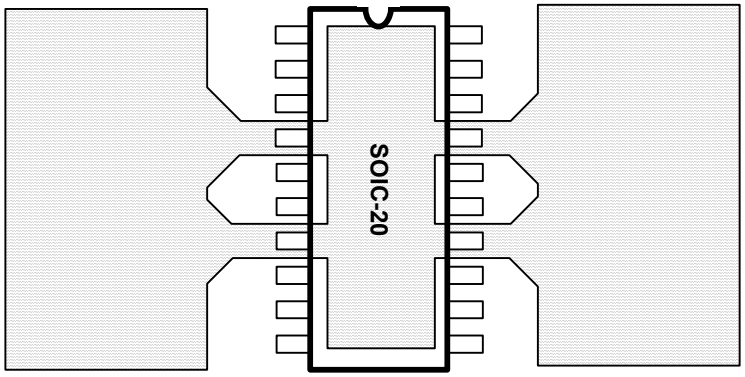

Figure 3: PCB Ground Plane Layout Condition

8.2 NQFP-32

The NQFP is designed to provide superior thermal performance, and using an exposed die pad on the bottom surface of the package partly contributes to this. In order to take full advantage of this thermal performance, the PCB must have features to conduct heat away from the package. A thermal grounded pad with thermal vias can achieve this. With a layout as shown in Figure 4, the thermal resistance junction – to – ambient can be brought down to a level of 25°C/W.

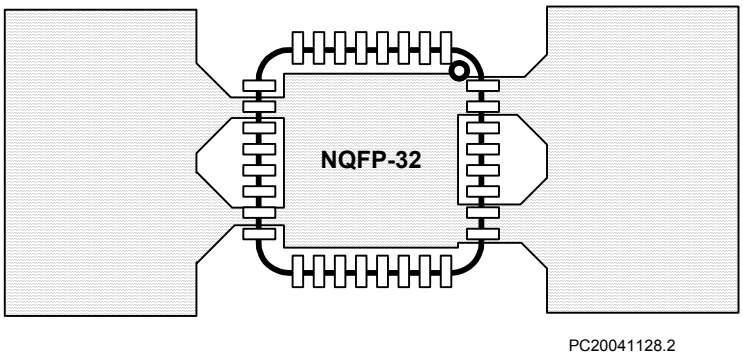

Figure 4: PCB Ground Plane Layout Condition

9.0 DC Parameters

The DC parameters are given for Vbb and temperature in their operating ranges. Currents flowing in the circuit are defined as positive.

Table 5: DC Parameters

Symbol	Pin(s)	Parameter	Test Conditions	Min.	Typ.	Max.	Unit
Motor Driver							
$I_{MSmax,Peak}$	MOTXP MOTXN MOTYP MOTYN	Max. current through motor coil in normal operation			800		mA
$I_{MSmax,RMS}$		Max. RMS current through coil in normal operation			570		mA
I_{MSabs}		Absolute error on coil current		-10		10	%
I_{MSrel}		Error on current ratio I_{coilx} / I_{coily}		-7		7	%
R_{DSon}		On resistance for each motor pin (including bond wire) at I_{MSmax}	V_{bb} = 12V, T_j = 50 °C		0.50	1	Ω
			V_{bb} = 8V, T_j = 50 °C		0.55	1	Ω
			V_{bb} = 12V, T_j = 150 °C		0.70	1	Ω
			V_{bb} = 8V, T_j = 150 °C		0.85	1	Ω
I_{MSL}		Pull down current	HiZ mode		2		mA
Thermal Warning & Shutdown							
T_{tw}		Thermal warning		138	145	152	°C
T_{tsd} (1) (2)		Thermal shutdown			T_{tw} + 10		°C
T_{low} (2)		Low temperature warning			T_{tw} - 155		°C
Supply and Voltage Regulator							
V_{bb}	VBB	Nominal operating supply range	T_{amb} ≤ 125 °C	6.5		18	V
			T_{amb} ≤ 85 °C	6.5		29	V
V_{bbOTP}		Supply voltage for OTP zapping (3)		9.0		10.0	V
I_{bat}		Total current consumption	Unloaded outputs		3.50	10.0	mA
I_{bat_s}		Sleep mode current consumption			50	100	µA
UV_1		Stop voltage high threshold		7.8	8.4	8.9	V
UV_2		Stop voltage low threshold		7.1	7.5	8.0	V
V_{dd}	VDD	Internal regulated output (4)	8V < V_{bb} < 29V	4.75	5	5.50	V
I_{ddStop}		Digital current consumption	V_{bb} < UV_2		2		mA
$V_{ddReset}$		Digital supply reset level @ power down (5)				4.5	V
I_{ddLim}		Current limitation	Pin shorted to ground			42	mA
Switch Input and Hardwire Address Input							
Rt_{OFF}	SWI HW	Switch OFF resistance (6)	Switch to Gnd or V_{bat},	10			kΩ
Rt_{ON}		Switch ON resistance (6)				2	kΩ
V_{bb_sw}		Vbb range for guaranteed operation of SWI and HW		6		29	V
V_{max_sw}		Maximum voltage	T < 1s			40V	V
I_{lim_sw}		Current limitation	Short to Gnd or V_{bat}		30		mA
I^2C Serial Interface							
V_{IL}	SDA SCK	Input level low (7)		- 0.5		0.3 * V_{dd}	V
V_{IH}		Input level high (8)		0.7 * V_{dd}		V_{dd} + 0.5	V
V_{nL}		Noise margin at the LOW level for each connected device (including hysteresis)		0.1 * V_{dd}			V
V_{nH}		Noise margin at the HIGH level for each connected device (including hysteresis)		0.2 * V_{dd}			

Table 5: DC Parameters (cont.)

Charge Pump							
V_{cp}	VCP	Output voltage	V_{bb} > 15V	V_{bb}+10	V_{bb}+12.5	V_{bb}+15	V
			8V < V_{bb} < 15V	2 * V_{bb} – 5	2 * V_{bb} – 2.5	2 * V_{bb}	V
C_{buffer}		External buffer capacitor		220		470	nF
C_{pump}	CPP CPN	External pump capacitor		220		470	nF
Motion Qualification Mode Output							
V_{OUT}	SWI	Output voltage swing	TestBemf I^2C command		0 - 4,85		V
R_{OUT}		Output impedance	Service mode I^2C command		2		kΩ
Av		Gain = V_{SWI} / V_{BEMF}	Service mode I^2C command		0,50		

Notes:

(1) No more than 100 cumulated hours in life time above T_{tsd}.
(2) Thermal shutdown and a low temperature warning are derived from thermal warning.
(3) A 10μF buffer capacitor of between VBB and GND is the minimum needed. Short connections to the power supply are recommended.
(4) Pin VDD must not be used for any external supply
(5) The RAM content will not be altered above this voltage.
(6) External resistance value seen from pin SWI or HW, including 1kΩ series resistor.
(7) If input voltages < - 0.3V, than a resistor between 22Ω to 100Ω needs to be put in series
(8) If the I^2C-bus is operated in Fast Mode V_{IHmin} = 0.7 * Vdd

10.0 AC Parameters

The AC parameters are given for V_{bb} and temperature in their operating ranges. All timing values of the I^2C transceiver are referred to V_{IHman} and V_{ILmax} levels (see Figure 5).

Table 6: AC Parameters

Symbol	Pin(s)	Parameter	Test Conditions	Min.	Typ.	Max.	Unit
Power-up							
T_{pu}		Power-up time	Guaranteed by design			10	ms
Internal Oscillator							
f_{osc}		Frequency of internal oscillator		3.6	4.0	4.4	MHz
I^2C Transceiver (Generic)							
C_B	SDA SCK	Capacitive load of each bus line				400 (1)	pF
C_I		Capacitance of SDA / SCK pin				10	pF
t_{SP}		Pulse width of spikes which must be suppressed by the input filter		50			ns
I^2C Transceiver (Standard Mode)							
f_{SCL}	SDA SCK	SCL clock frequency				100	kHz
$t_{HD,START}$		Hold time (repeated) START condition. After this period the first clock pulse is generated.		4.0			µs
t_{LOW}		LOW period of the SCK clock		4.7			µs
t_{HIGH}		HIGH period of the SCK clock		4.0			µs
$t_{SU,START}$		Set-up time for a repeated START condition		4.7			µs
$t_{HD,DATA}$		Data hold time for I^2C bus devices		0 (2)		3.45 (3)	µs
$t_{SU,DATA}$		Data set-up time		250			ns
t_R		Rise time of SDA and SCK signals				1.0	µs
t_F		Fall time of SDA and SCK signals				0.3	µs
$t_{SU,STOP}$		Set-up time for STOP condition		4.0			µs
t_{BUF}		Bus free time between STOP and START condition		4.7			µs
I^2C Transceiver (Fast Mode)							
f_{SCL}	SDA SCK	SCL clock frequency				360	kHz
$t_{HD,START}$		Hold time (repeated) START condition. After this period the first clock pulse is generated.		0.6			µs
t_{LOW}		LOW period of the SCK clock		1.3			µs
t_{HIGH}		HIGH period of the SCK clock		0.6			µs
$t_{SU,START}$		Set-up time for a repeated START condition		0.6			µs
$t_{HD,DATA}$		Data hold time for I^2C bus devices		0 (2)		0.9 (3)	µs
$t_{SU,DATA}$		Data set-up time		100 (4)			ns
t_R		Rise time of SDA and SCK signals		$20 + 0.1C_B$		300	ns
t_F		Fall time of SDA and SCK signals		$20 + 0.1C_B$		300	ns
$t_{SU,STOP}$		Set-up time for STOP condition		0.6			µs
t_{BUF}		Bus free time between STOP and START condition		1.3			µs

Table 6: AC Parameters (cont.)

Switch Input and Hardwire Address Input							
T_{sw}	SWI HW2	Scan pulse period (5)			1024		µs
T_{sw_on}		Scan pulse duration			128		µsµs
Motor driver							
F_{pwm}	MOTxx	PWM frequency (5)	PWMfreq = 0 (6)	20.6	22.8	25.0	kHz
			PWMfreq = 1 (6)	41,2	45,6	50,0	kHz
F_{jit_depth}		PWM jitter modulation depth	PWMJen = 1 (6)		10		%
T_{brise}		Turn-on transient time	Between 10% and 90%		170		ns
T_{bfall}		Turn-off transient time			140		ns
T_{stab}		Run current stabilization time		29	32	35	ms
Charge Pump							
f_{CP}	CPN CPP	Charge pump frequency (5)			250		kHz

Notes:

(1) The maximum number of connected I²C devices is dependent on the number of available addresses and the maximum bus capacitance to still guarantee the rise and fall times of the bus signals.

(2) An I²C device must internally provide a hold time of at least 300ns for the SDA signal (referred to the V_{IHmin} of the SCL signal) to bridge the undefined region of the falling edge of SCL.

(3) The maximum $t_{HD,DAT}$ has only to be met if the device does not stretch the LOW period (t_{LOW}) of the SCL signal.

(4) A Fast-mode I²C-bus device can be used in a standard-mode I²C bus system, but the requirement $t_{SU,DATA} \geq 250ns$ must than be met. This will automatically be the case if the device does not stretch the LOW period of the SCL signal. If such a device does stretch the LOW period of the SCL signal, it must output the next data bit to the SDA line $t_{rmax} + t_{SU,DATA} = 1000 + 250 = 1250ns$ (according to the standard-mode I²C-bus specification) before the SCL line is released.

(5) Derived from internal oscillator.

(6) See SetMotorParam and PWM regulator.

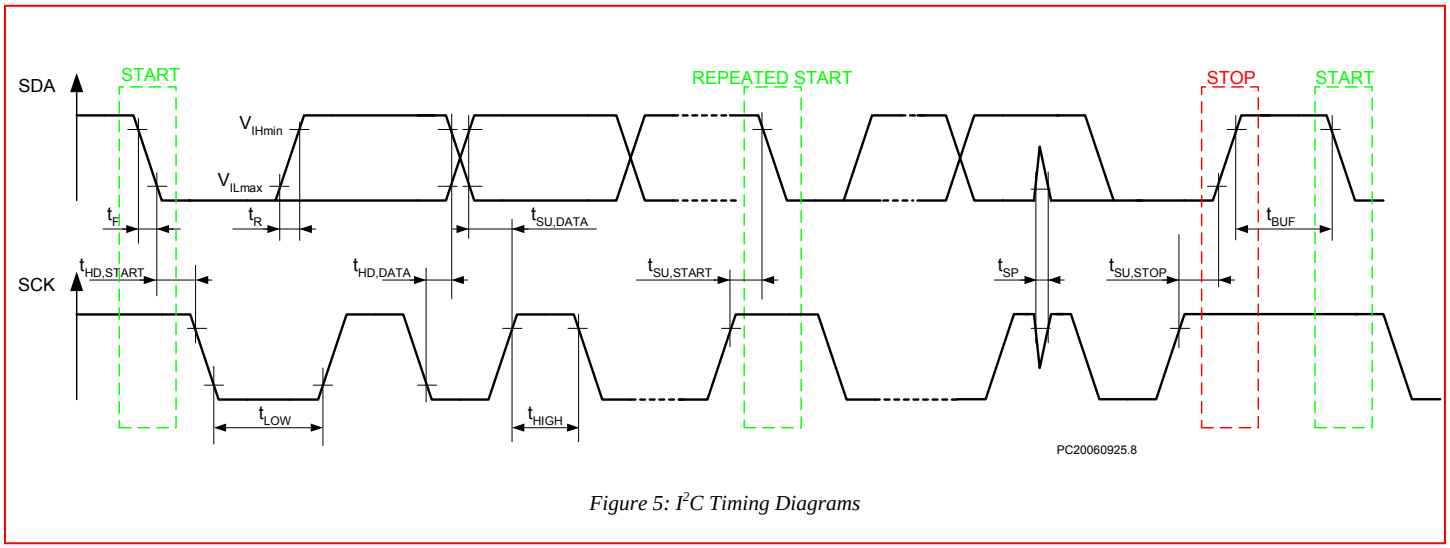

Figure 5: I²C Timing Diagrams

11.0 Typical Application

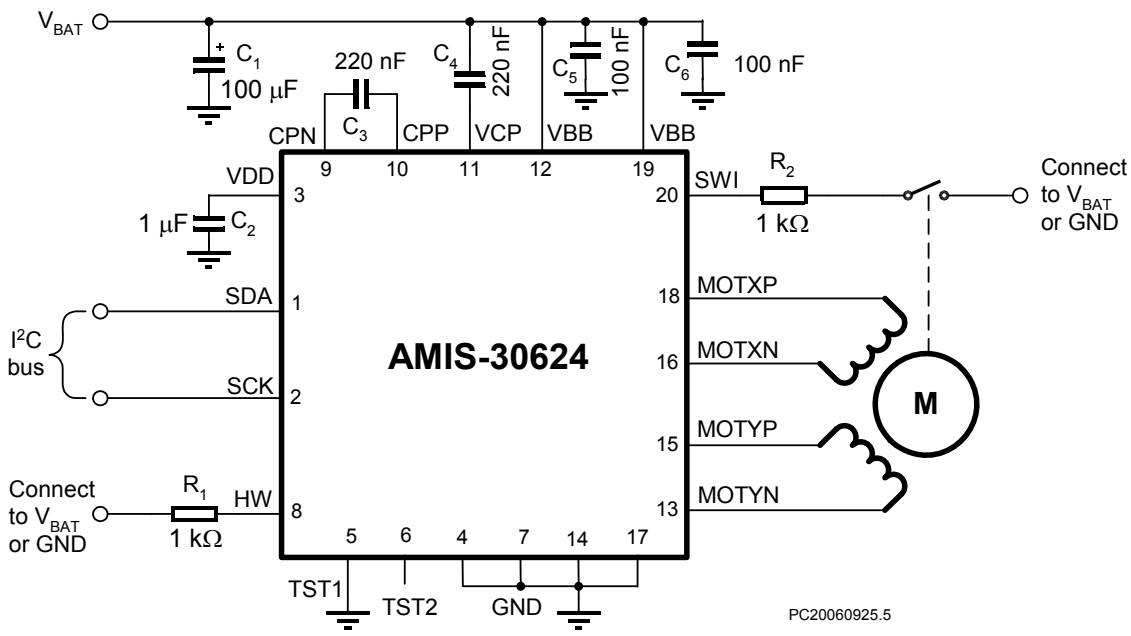

Figure 6: Typical Application Diagram

Notes:

(1) All resistors are ± 5%, ¼ W.
(2) Depending on the application, the ESR value and working voltage of C_1 must be carefully chosen.
(3) C_2 must be a ceramic capacitor to assure low ESR.
(4) C_3 and C_4 must be as close as possible to pins CPN, CPP, VCP, and VBB to reduce EMC radiation.
(5) C_5 and C_6 must be close to pins VBB and GND.

12.0 Positioning Parameters

12.1 Stepping Modes

One of four possible stepping modes can be programmed:

- Half stepping
- 1/4 micro-stepping
- 1/8 micro-stepping
- 1/16 micro-stepping

12.2 Maximum Velocity

For each stepping mode, the maximum velocity V_{max} can be programmed to 16 possible values given in Table 7.

The accuracy of V_{max} is derived from the internal oscillator. Under special circumstances it is possible to change the V_{max} parameter while a motion is ongoing. All 16 entries for the V_{max} parameter are divided into four groups. When changing V_{max} during a motion the application must take care that the new V_{max} parameter stays within the same group, otherwise steps might be lost.

Table 7: Maximum Velocity Selection Table

Vmax Index		Vmax (Full-step/s)	Group	Stepping Mode			
Hex	Dec			Half stepping (Half-step/s)	1/4th Micro-stepping (Micro-step/s)	1/8th Micro-stepping (Micro-step/s)	1/16th Micro-stepping (Micro-step/s)
0	0	99	A	197	395	790	1579
1	1	136	B	273	546	1091	2182
2	2	167		334	668	1335	2670
3	3	197		395	790	1579	3159
4	4	213		425	851	1701	3403
5	5	228		456	912	1823	3647
6	6	243		486	973	1945	3891
7	7	273	C	546	1091	2182	4364
8	8	303		607	1213	2426	4852
9	9	334		668	1335	2670	5341
A	10	364		729	1457	2914	5829
B	11	395		790	1579	3159	6317
C	12	456		912	1823	3647	7294
D	13	546	D	1091	2182	4364	8728
E	14	729		1457	2914	5829	11658
F	15	973		1945	3891	7782	15564

12.3 Minimum Velocity

Once the maximum velocity is chosen, 16 possible values can be programmed for the minimum velocity V_{min}. Table 8 provides the obtainable values in full-step/s. The accuracy of V_{min} is derived from the internal oscillator.

Table 8: Obtainable Values in Full-step/s for the Minimum Velocity

Vmin Index		Vmax Factor	Vmax (Full-step/s)															
			A	B						C						D		
Hex	Dec		99	136	167	197	213	228	243	273	303	334	364	395	456	546	729	973
0	0	1	99	136	167	197	213	228	243	273	303	334	364	395	456	546	729	973
1	1	1/32	3	4	5	6	6	7	7	8	8	10	10	11	13	15	19	27
2	2	2/32	6	8	10	11	12	13	14	15	17	19	21	23	27	31	42	57
3	3	3/32	9	12	15	18	19	21	22	25	27	31	32	36	42	50	65	88
4	4	4/32	12	16	20	24	26	28	30	32	36	40	44	48	55	65	88	118
5	5	5/32	15	21	26	31	32	35	37	42	46	51	55	61	71	84	111	149
6	6	6/32	18	25	31	36	39	42	45	50	55	61	67	72	84	99	134	179
7	7	7/32	21	30	36	43	46	50	52	59	65	72	78	86	99	118	156	210
8	8	8/32	24	33	41	49	52	56	60	67	74	82	90	97	113	134	179	240
9	9	9/32	28	38	47	55	59	64	68	76	84	93	101	111	128	153	202	271
A	10	10/32	31	42	51	61	66	71	75	84	93	103	113	122	141	168	225	301
B	11	11/32	34	47	57	68	72	78	83	93	103	114	124	135	156	187	248	332
C	12	12/32	37	51	62	73	79	85	91	101	113	124	135	147	170	202	271	362
D	13	13/32	40	55	68	80	86	93	98	111	122	135	147	160	185	221	294	393
E	14	14/32	43	59	72	86	93	99	106	118	132	145	158	172	198	237	317	423
F	15	15/32	46	64	78	93	99	107	113	128	141	156	170	185	214	256	340	454

Notes:

(1) The Vmax factor is an approximation.

(2) In case of motion without acceleration (**AccShape = 1**) the length of the steps = 1/**Vmin.** In case of accelerated motion (**AccShape** = 0) the length of the first step is shorter than 1/**Vmin** depending of **Vmin, Vmax** and **Acc**.

12.4 Acceleration and Deceleration

Sixteen possible values can be programmed for Acc (acceleration and deceleration between V_{min} and V_{max}). Table 9 provides the obtainable values in full-step/s². One observes restrictions for some combination of acceleration index and maximum speed (gray cells).

The accuracy of Acc is derived from the internal oscillator.

Table 9: Acceleration and Deceleration Selection Table

Vmax (FS/s) →		99	136	167	197	213	228	243	273	303	334	364	395	456	546	729	973
↓ Acc Index		Acceleration (Full-step/s²)															
Hex	Dec																
0	0	49							106						473		
1	1	218													735		
2	2	1004															
3	3	3609															
4	4	6228															
5	5	8848															
6	6	11409															
7	7	13970															
8	8	16531															
9	9	14785	19092														
A	10		21886														
B	11		24447														
C	12		27008														
D	13		29570														
E	14		29570						34925								
F	15								40047								

The formula to compute the number of equivalent full-step during acceleration phase is:

$$Nstep = \frac{Vmax^2 - Vmin^2}{2 \times Acc}$$

12.5 Positioning

The position is programmed in the command SetPosition and is given as a number of (micro)steps. According to the chosen stepping mode, the position word must be aligned as described in Table 10. When using command GotoSecurePosition, data is automatically aligned.

Table 10: Position Word Alignment

Stepping Mode	Position Word: Pos[15:0]																Shift
1/16th	S	B14	B13	B12	B11	B10	B9	B8	B7	B6	B5	B4	B3	B2	B1	LSB	No shift
1/8th	S	B13	B12	B11	B10	B9	B8	B7	B6	B5	B4	B3	B2	B1	LSB	0	1-bit left ⇔ ×2
1/4th	S	B12	B11	B10	B9	B8	B7	B6	B5	B4	B3	B2	B1	LSB	0	0	2-bit left ⇔ ×4
Half-stepping	S	B11	B10	B9	B8	B7	B6	B5	B4	B3	B2	B1	LSB	0	0	0	3-bit left ⇔ ×8
PositionShort	S	S	S	B9	B8	B7	B6	B5	B4	B3	B2	B1	LSB	0	0	0	No shift
SecurePosition	S	B9	B8	B7	B6	B5	B4	B3	B2	B1	LSB	0	0	0	0	0	No shift

Notes:
(1) LSB: Least significant bit
(2) S: Sign bit

12.5.1. Position Ranges

A position is coded by using the binary two's complement format. According to the positioning commands used and to the chosen stepping mode, the position range will be as shown in Table 11.

Table 11: Position Range

Command	Stepping Mode	Position Range	Full Range Excursion	Number of Bits
SetPosition	Half stepping	-4096 to +4095	8192 half-steps	13
	1/4th micro-stepping	-8192 to +8191	16384 micro-steps	14
	1/8th micro-stepping	-16384 to +16383	32768 micro-steps	15
	1/16th micro-stepping	-32768 to +32767	65536 micro-steps	16
SetPositionShort	Half-stepping	-1024 to +1023	2048 half-steps	11

When using the command SetPosition, although coded on 16 bits, the position word will have to be shifted to the left by a certain number of bits, according to the stepping mode.

12.5.2. Secure Position

A secure position can be programmed. It is coded in 11-bits, thus having a lower resolution than normal positions, as shown in Table 12. See also the command GotoSecurePosition.

Table 12: Secure Position

Stepping Mode	Secure Position Resolution
Half-stepping	4 half-steps
1/4th micro-stepping	8 micro-steps (1/4th)
1/8th micro-stepping	16 micro-steps (1/8th)
1/16th micro-stepping	32 micro-steps (1/16th)

Important Notes:

(1) The secure position is disabled in case the programmed value is the reserved code "10000000000" (0x400 or most negative position).

(2) The resolution of the secure position is limited to 9 bit at start-up. The OTP register is copied in RAM as illustrated below. SecPos1 and SecPos0 = 0.

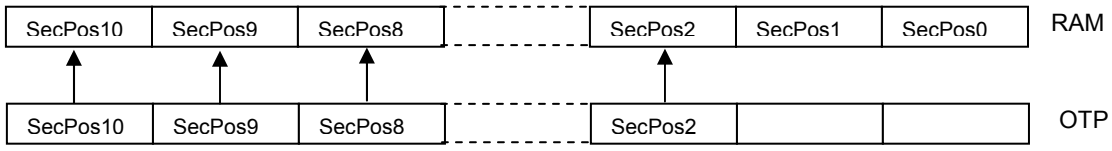

12.5.3. Shaft

A shaft bit which can be programmed in OTP or with command SetMotorParam, defines whether a positive motion is a clockwise or counter-clockwise rotation (an outer or an inner motion for linear actuators):

- Shaft = 0 ⇒ MOTXP is used as positive pin of the X coil, while MOTXN is the negative one
- Shaft = 1 ⇒ opposite situation.

13.0 Structural Description

See the block diagram in Figure 1.

13.1 Stepper Motor Driver

The motor driver receives the control signals from the control logic. The main features are:

- Two H-bridges designed to drive a stepper motor with two separated coils. Each coil (X and Y) is driven by one H-bridge and the driver controls the currents flowing through the coils. The rotational position of the rotor, in unloaded condition, is defined by the ratio of current flowing in X and Y. The torque of the stepper motor when unloaded is controlled by the magnitude of the currents in X and Y.
- The control block for the H-bridges including the PWM control, the synchronous rectification and the internal current sensing circuitry
- The charge pump to allow driving of the H-bridges' high side transistors
- Two pre-scale 4-bit DACs to set the maximum magnitude of the current through X and Y
- Two DACs to set the correct current ratio through X and Y

Battery voltage monitoring is also performed by this block, which provides information to the control logic part. The same applies for the detection and reporting of an electrical problem that could occur on the coils or the charge pump.

13.2 Control Logic (Position Controller and Main Control)

The control logic block stores the information provided by the I^2C interface (in a RAM or an OTP memory) and digitally controls the positioning of the stepper motor in terms of speed and acceleration, by feeding the right signals to the motor driver state machine.

It will take into account the successive positioning commands to properly initiate or stop the stepper motor in order to reach the set point in a minimum time.

It also receives feedback from the motor driver part in order to manage possible problems and decide on internal actions and reporting to the I^2C interface.

13.3 Motion Detection

Motion detection is based on the back emf, generated internally in the running motor. When the motor is blocked, for example when it hits the end-position, the velocity and as a result also the generated back emf, is disturbed. The AMIS-30624 senses the back emf, calculates a moving average and compares the value with two independent threshold levels. If the back emf disturbance is bigger than the set threshold, the running motor is stopped.

13.4 Miscellaneous

The AMIS-30624 also contains the following:

- An internal oscillator needed for the control logic and the PWM control of the motor driver
- An internal trimmed voltage source for precise referencing
- A protection block featuring a thermal shutdown and a power-on-reset circuit
- A 5V regulator (from the battery supply) to supply the internal logic circuitry

14.0 Functional Description

This chapter describes the following functional blocks in more detail:

- Position controller
- Main control and register, OTP memory + ROM
- Motor driver

The motion detection and I^2C control are discussed in separate chapters.

14.1 Position Controller

14.1.1. Positioning and Motion Control

A positioning command will produce a motion as illustrated in Figure 7. A motion starts with an acceleration phase from minimum velocity (Vmin) to maximum velocity (Vmax), and ends with a symmetrical deceleration. This is defined by the control logic according to the position required by the application and the parameters programmed by the application during configuration phase. The current in the coils is also programmable.

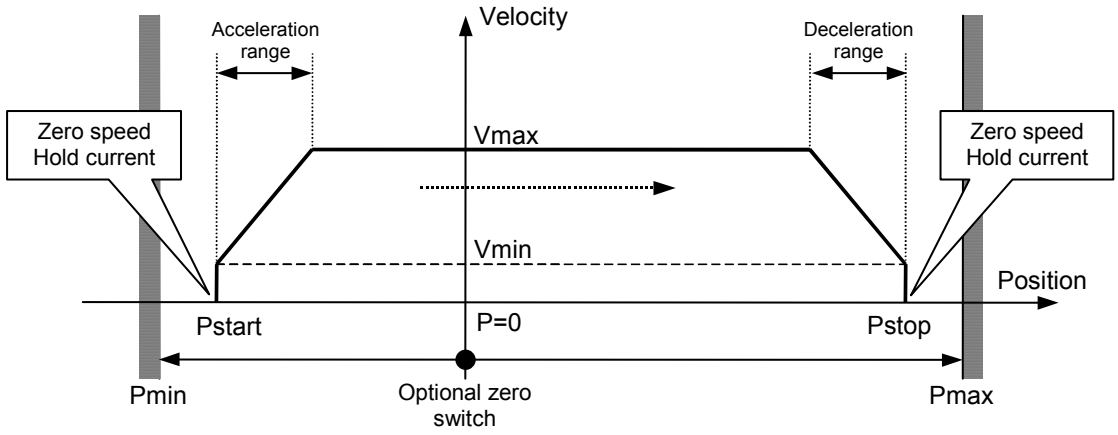

Figure 7: Positioning and Motion Control

Table 13: Position Related Parameters

Parameter	Reference
Pmax – Pmin	See Positioning
Zero speed hold current	See Ihold
Maximum current	See Irun
Acceleration and deceleration	See Acceleration and deceleration
Vmin	See Minimum velocity
Vmax	See Maximum velocity

Different positioning examples are shown in Table 14.

Table 14: Positioning Examples

Positioning Examples	
Short motion	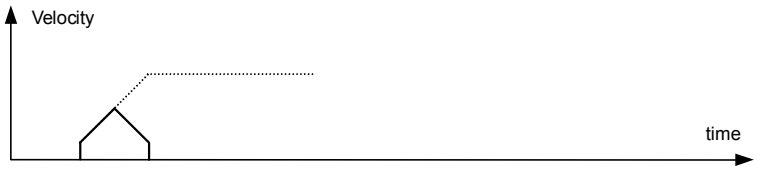
New positioning command in same direction, shorter or longer, while a motion is running at maximum velocity.	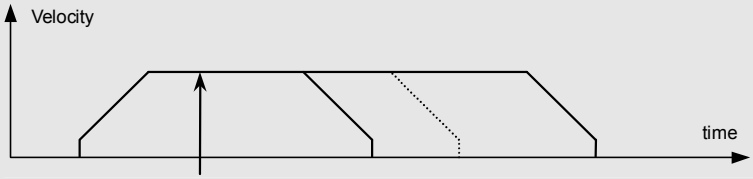
New positioning command in same direction while in deceleration phase Note: there is no wait time between the deceleration phase and the new acceleration phase.	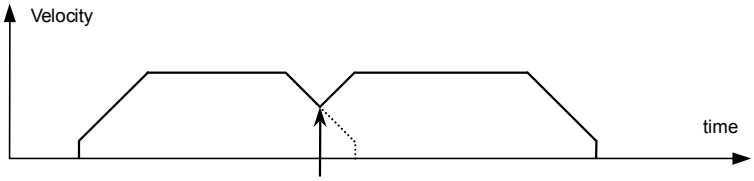
New positioning command in reverse direction while motion is running at maximum velocity.	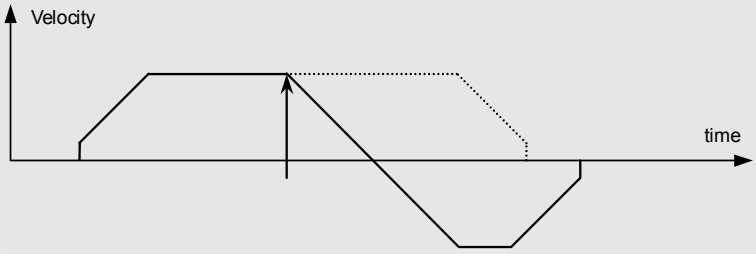
New positioning command in reverse direction while in deceleration phase.	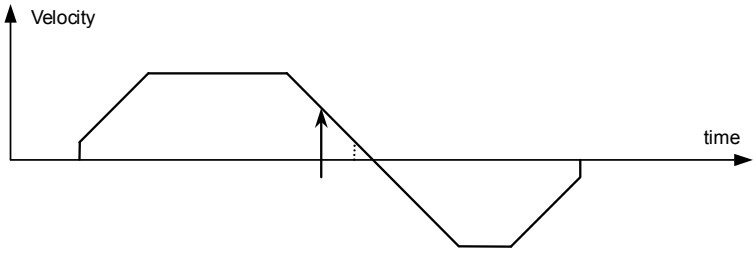
New velocity programming while motion is running.	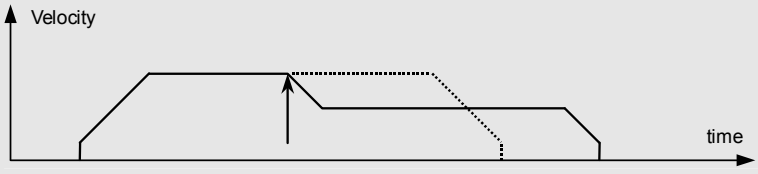

14.1.2. Dual Positioning

A SetDualPosition command allows the user to perform positioning using two different velocities. The first motion is done with the specified Vmin and Vmax velocities in the SetDualPosition command, with the acceleration (deceleration) parameter already in RAM, to a position Pos1[15:0] also specified in SetDualPosition .

A second relative motion to a position Pos1[15:0] + Pos2[15:0] is done at the specified Vmin velocity in the SetDualPosition command (no acceleration). Once the second motion is achieved, the ActPos register is reset to zero, whereas TagPos register is not changed.

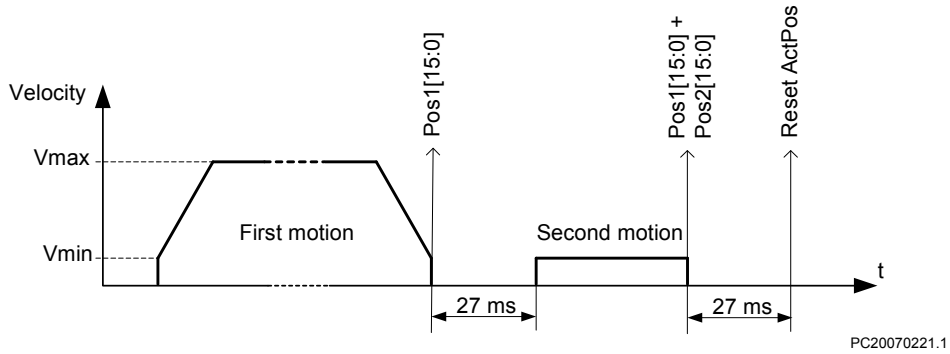

Figure 8: Dual Positioning

Remark: This operation cannot be interrupted or influenced by any further command unless the conditions exist to cause a motor shutdown or by a HardStop command. Sending a SetDualPosition command while a motion is already ongoing is not recommended.

Notes:

(0) The priority encoder describes the management of states and commands. All notes below are to be considered illustrative.
(1) The last SetPosition command issued during a DualPosition sequence will be kept in memory and executed afterwards. This also applies to the commands SetMotorParam and GotoSecurePosition.
(2) Commands such as GetFullStatus1 or GetFullStatus2 will be executed while a Dual Positioning is running.
(3) A DualPosition sequence starts by setting TagPos register to SecPos value, provided secure position is enabled otherwise TagPos is reset to zero.
(4) The acceleration/deceleration value applied during a DualPosition sequence is the one stored in RAM before the SetDualPosition command is sent. The same applies for Shaft bit, but not for Irun, Ihold and StepMode, which can be changed during the Dual Positioning sequence.
(5) The Pos1, Pos2, Vmax and Vmin values programmed in a SetDualPosition command apply only for this sequence. All further positioning will use the parameters stored in RAM (programmed for instance by a former SetMotorParam command).
(6) Commands ResetPosition, SetDualPosition, and SoftStop will be ignored while a DualPosition sequence is ongoing, and will not be executed afterwards.
(7) A SetMotorParam command should not be sent during a SetDualPosition sequence.
(8) If for some reason ActPos equals Pos1[15:0] at the moment the SetDualPosition command is issued, the circuit will enter in deadlock state. Therefore, the application should check the actual position by a GetFullStatus2 command prior to send the SetDualPosition command.

14.1.3. Position Periodicity

Depending on the stepping mode the position can range from –4096 to +4095 in half-step to –32768 to +32767 in 1/16th micro-stepping mode. One can project all these positions lying on a circle. When executing the command `SetPosition`, the position controller will set the movement direction in such a way that the traveled distance is at a minimum.

Figure 9 illustrates that the moving direction going from `ActPos` = +30000 to `TagPos` = –30000 is clockwise.
If a counter clockwise motion is required in this example, several consecutive `SetPosition` commands can be used. For larger movements, one could also use the command `RunVelocity`.

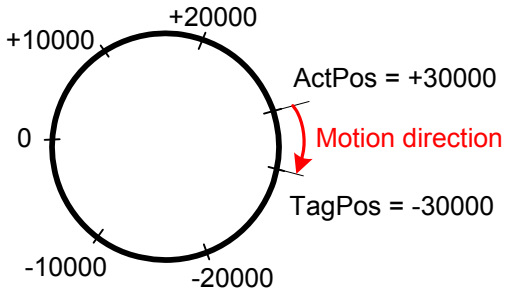

Figure 9: Motion Direction is Function on Difference Between ActPos and TagPos

14.1.4. Hardwired Address HW

In Figure 10 a simplified schematic diagram is shown of the HW comparator circuit.

The HW pin is sensed via two switches S_{TOP} and S_{BOT}. The DriveHS and DriveLS control lines are alternatively closing S_{TOP} and S_{BOT}, connecting HW pin with a current to resistor converter. Closing S_{TOP} (DriveHS = 1) will sense a current to GND. In that case the top I→R converter output is low, via the closed passing switch S_{PASS_T} this signal is fed to the "R" comparator which output HW_Cmp is high. Closing bottom switch S_{BOT} (DriveLS = 1) will sense a current to VBAT. The corresponding I→R converter output is low and via S_{PASS_B} fed to the comparator. The output HW_Cmp will be high.

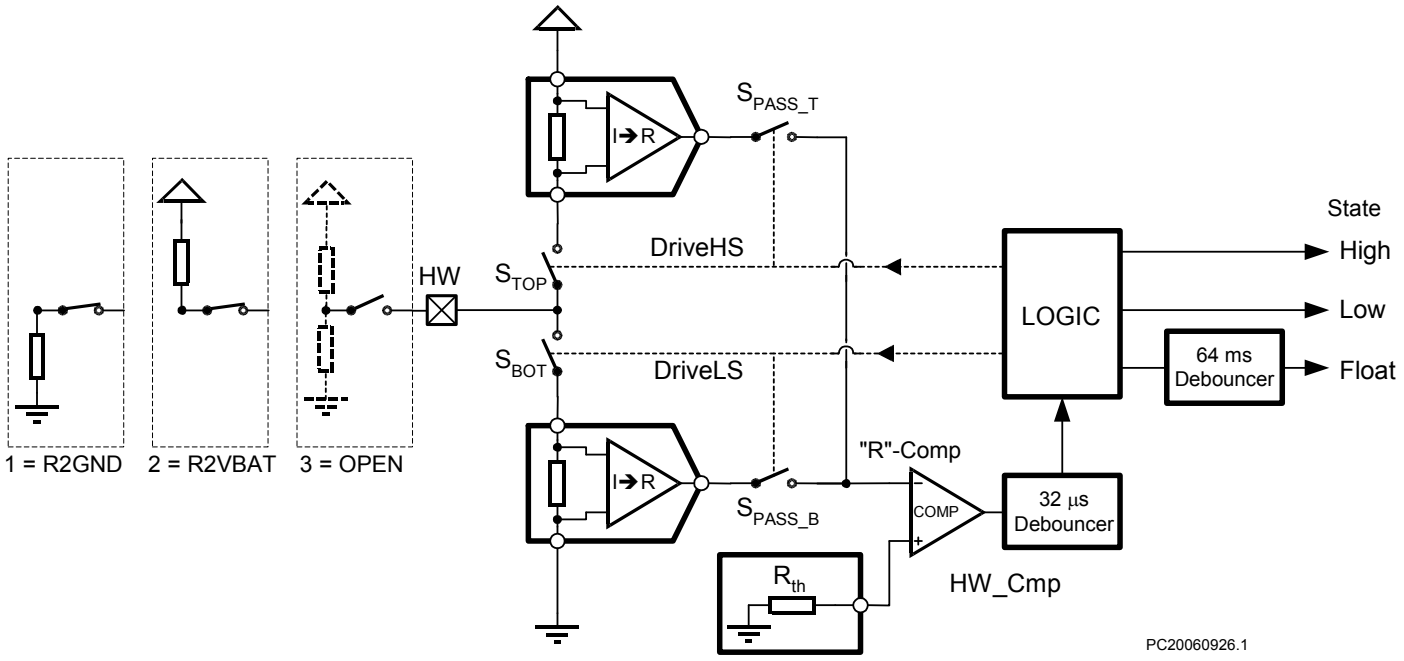

Figure 10: Simplified Schematic Diagram of the HW Comparator

Three cases can be distinguished (see also Figure 10):

- HW is connected to ground: R2GND or Drawing 1
- HW is connected to VBAT: R2VBAT or Drawing 2
- HW is floating: OPEN or Drawing 3

Table 15: State Diagram of the HW Comparator

Previous State	DriveLS	DriveHS	HW_Cmp	New State	Condition	Drawing
Float	1	0	0	Float	R2GND or OPEN	1 or 3
Float	1	0	1	High	R2VBAT	2
Float	0	1	0	Float	R2VBAT or OPEN	2 or 3
Float	0	1	1	Low	R2GND	1
Low	1	0	0	Low	R2GND or OPEN	1 or 3
Low	1	0	1	High	R2VBAT	2
Low	0	1	0	Float	R2VBAT or OPEN	2 or 3
Low	0	1	1	Low	R2GND	1
High	1	0	0	Float	R2GND or OPEN	1 or 3
High	1	0	1	High	R2VBAT	2
High	0	1	0	High	R2VBAT or OPEN	2 or 3
High	0	1	1	Low	R2GND	1

The logic is controlling the correct sequence in closing the switches and in interpreting the 32µs de-bounced HW_Cmp output accordingly. The output of this small state-machine is corresponding to:

- High or address = 1
- Low or address = 0
- Floating

As illustrated in Table 15, the state is depending on the previous state, the condition of the two switch controls (DriveLS and DriveHS) and the output of HW_Cmp. Figure 11 shows an example of a practical case where a connection to VBAT is interrupted.

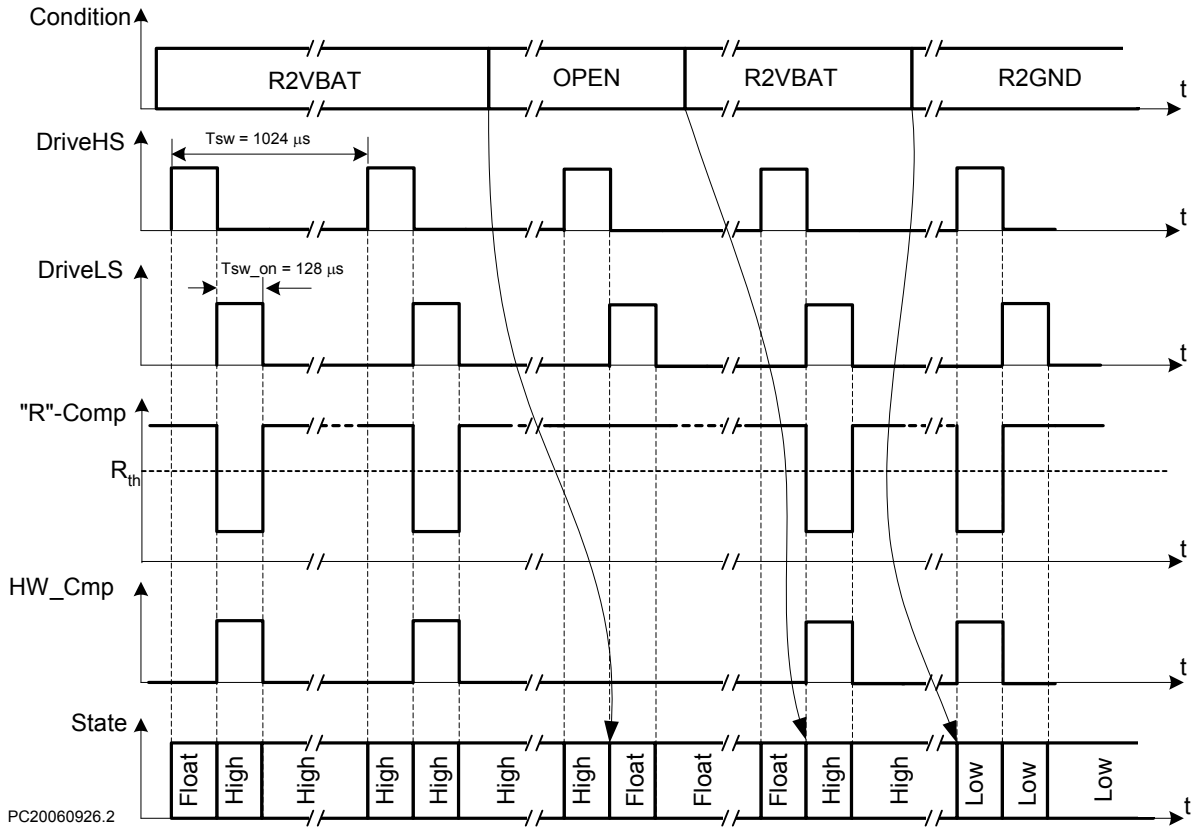

Figure 11: Timing Diagram Showing the Change in States for HW Comparator

R2VBAT
A resistor is connected between VBAT and HW. Every 1024µs S_{BOT} is closed for a period of 128µs and a current is sensed. The output of the I → R converter is low and the HW_Cmp output is high. Assuming the previous state was floating, the internal LOGIC will interpret this as a change of state and the new state will be High (see also Table 15). The next time S_{BOT} is closed the same condition is observed. The previous state was high, so based on Table 15 the new state remains unchanged. This high state will be interpreted as HW address = 1.

OPEN
In case the HW connection is lost (broken wire, bad contact in connector) the next time S_{BOT} is closed this will be sensed. There will be no current, the output of the corresponding I → R converter is high and the HW_Cmp will be low. The previous state was High. Based on Table 15 one can see that the state changes to float. This will trigger a motion to secure position after a debounce time of 64 ms. This prevents false triggering in case of micro interruptions of the power supply. See also Electrical Transient Conduction Along Supply Lines.

R2GND
If a resistor is connected between HW and the GND, a current is sensed every 1024µs when S_{TOP} is closed. The output of the top I → R converter is low and as a result the HW_Cmp output switches to high. Again based on the stated diagram in Table 15 one can see that the state will change to low. This low state will be interpreted as HW address = 0.

14.1.5. External Switch SWI

As illustrated in Figure 12, the SWI comparator is almost identical to HW. The major difference is in the limited number of states. Only open or closed is recognised leading to respectively ESW = 0 and ESW = 1.

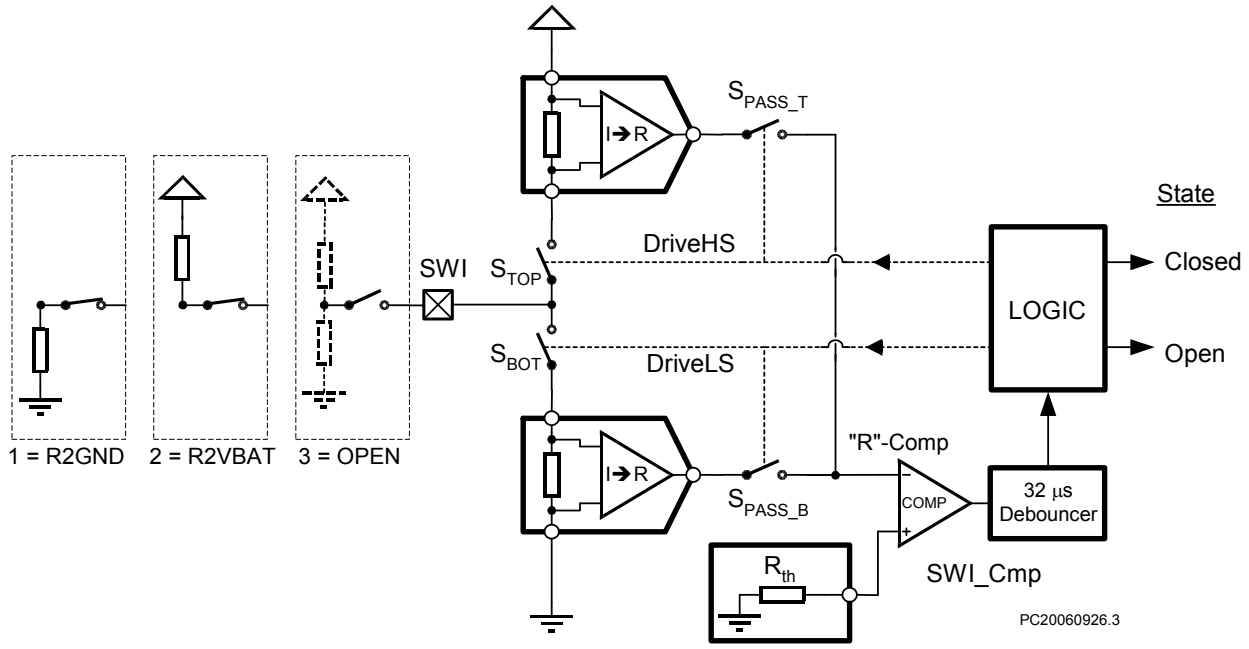

Figure 12: Simplified Schematic Diagram of the SWI Comparator

As illustrated in Figure 14, a change in state is always synchronized with DriveHS or DriveLS. The same synchronization is valid for updating the internal position register. This means that after every current pulse (or closing of S_{TOP} or S_{BOT}) the state of position switch together with the corresponding position is memorized.

Using the GetActualPos commands reads back the ActPos register and the status of ESW. In this way the master node may get synchronous information about the state of the switch together with the position of the motor. See Figure 13.

GetFullStatus1 Response Frame									
Byte	Content	Structure							
		Bit 7	Bit 6	Bit 5	Bit 4	Bit 3	Bit 2	Bit 1	Bit 0
0	Address	**1**	**1**	**OTP3**	**OTP2**	**OTP1**	**OTP0**	**HW**	**1**
1	Address	1	1	1	OTP3	OTP2	OTP1	OTP0	HW
2	Data 1	Irun[3:0]				Ihold[3:0]			
3	Data 2	Vmax[3:0]				Vmin[3:0]			
4	Data 3	AccShape	StepMode[1:0]		Shaft	Acc[3:0]			
5	Data 4	VddReset	StepLoss	ElDef	UV2	TSD	TW	Tinfo[1:0]	
6	Data 5	Motion[2:0]			ESW	OVC1	OVC2	Stall	CPFail
7	Data 6	1	1	1	1	1	1	1	1
8	Data 7	AbsThr[3:0]				DelThr[3:0]			

Figure 13: GetFullStatus1 *I²C Commando*

Important remark: Every 512µs this information is refreshed.

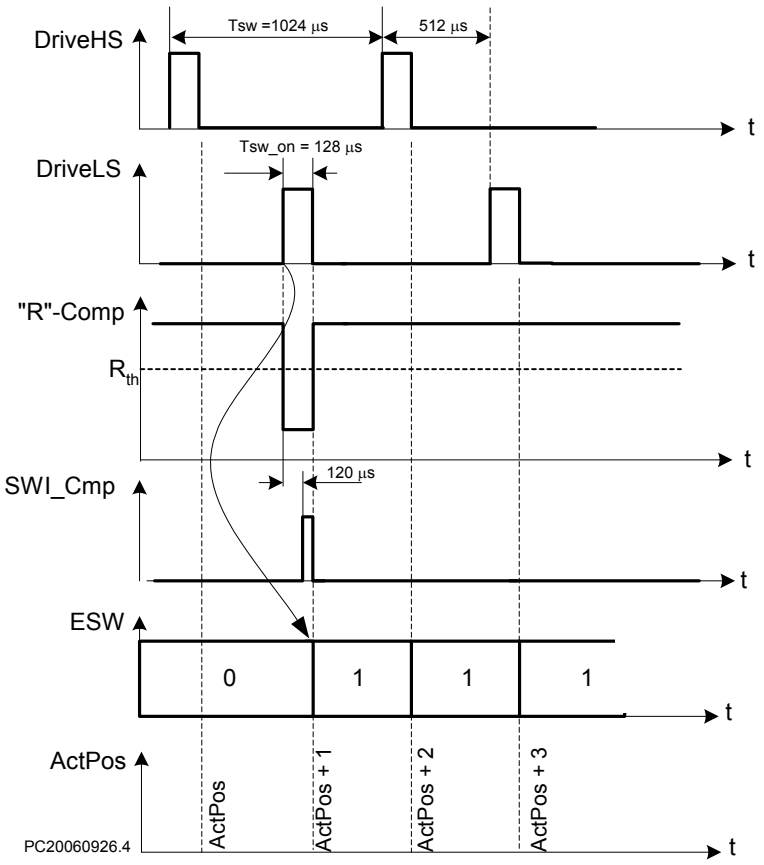

Figure 14: Timing Diagram Showing the Change in States for SWI Comparator

14.2 Main Control and Register, OTP Memory + ROM

14.2.1. Power-up Phase

The power-up phase of the AMIS-30624 will not exceed 10ms. After this phase, the AMIS-30624 is in shutdown mode, ready to receive I^2C messages and execute the associated commands. After power-up, the registers and flags are in the reset state; some of them being loaded with the OTP memory content (see Table 18).

14.2.2. Reset State

After power-up, or after a reset occurrence (e.g. a micro cut on pin VBB has made Vdd go below VddReset level), the H-bridges will be in high impedance mode, and the registers and flags will be in a predetermined position. This is documented in Table 18 and Table 19.

14.2.3. Soft Stop

A soft stop is an immediate interruption of a motion, but with a deceleration phase. At the end of this action, the register `TagPos` is loaded with the value contained in register `ActPos` to avoid an attempt of the circuit to achieve the motion (seeTable 18). The circuit is then ready to execute a new positioning command, provided thermal and electrical conditions allow for it.

14.2.4. Thermal Shutdown Mode

When thermal shutdown occurs, the circuit performs a `SoftStop` command and goes to motor shutdown mode (see Figure 15).

14.2.5. Temperature Management

The AMIS-30624 monitors temperature by means of two thresholds and one shutdown level, as illustrated in the Figure 15. The only condition necessary to reset flags <`TW`> and <`TSD`> (respectively thermal warning and thermal shutdown) is when the temperature is lower than T_{tw} causing the occurrence of a `GetFullStatus1` I^2C frame.

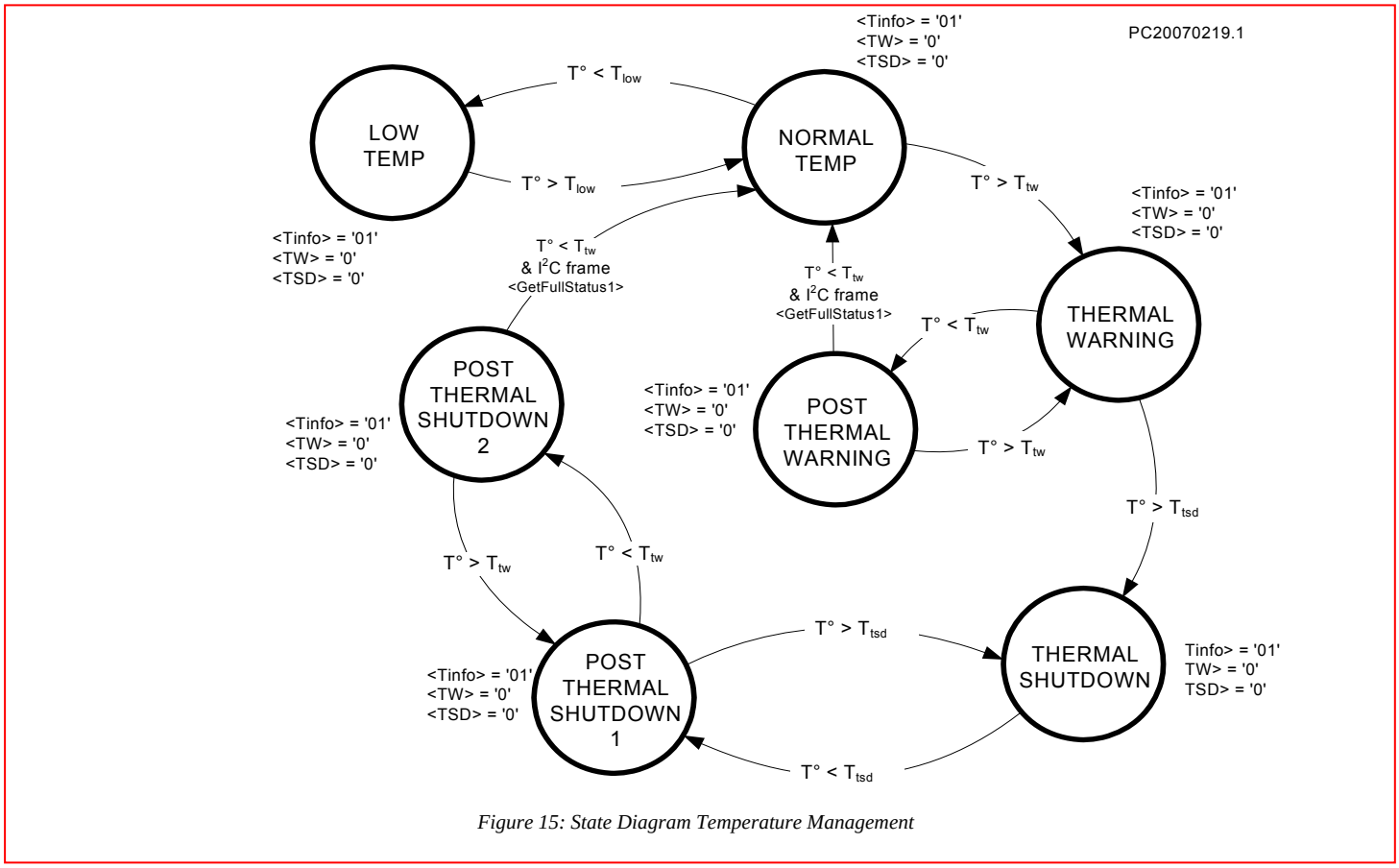

Figure 15: State Diagram Temperature Management

14.2.6. Battery Under-voltage Management

The AMIS-30624 monitors the battery voltage by means of one threshold and one shutdown level, as illustrated in Figure 16. The only condition necessary to reset **flags** <UV2> and <StepLoss> is to recover a battery voltage higher than UV1 and to receive a GetFullStatus1 command.

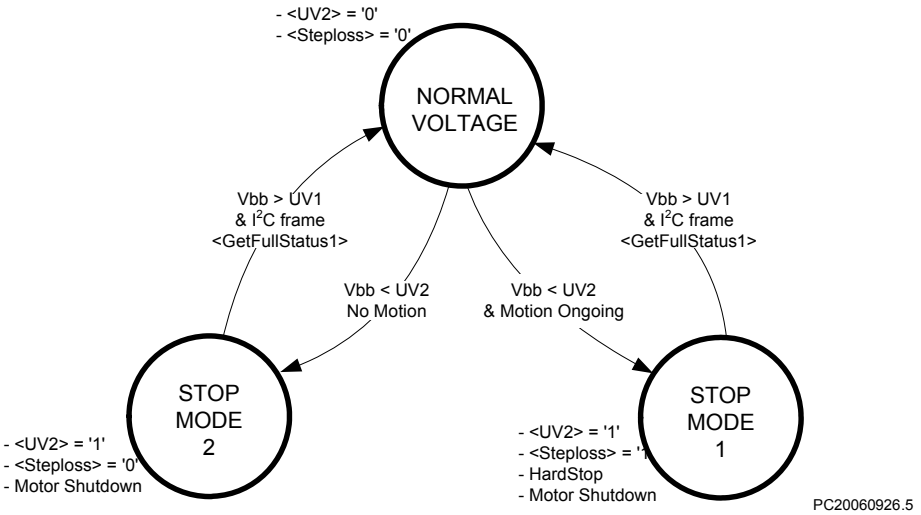

Figure 16: State Diagram Battery Voltage Management

14.2.7. OTP Register

14.2.7.1 OTP Memory Structure

Table 16 shows where the parameters to be stored in the OTP memory are located.

Table 16: OTP Memory Structure

Address	Bit 7	Bit 6	Bit 5	Bit 4	Bit 3	Bit 2	Bit 1	Bit 0
0x00	OSC3	OSC2	OSC1	OSC0	IREF3	IREF2	IREF1	IREF0
0x01		TSD2	TSD1	TSD0	BG3	BG2	BG1	BG0
0x02	AbsThr3	AbsThr2	AbsThr1	AbsThr0	PA3	PA2	PA1	PA0
0x03	Irun3	Irun2	Irun1	Irun0	Ihold3	Ihold2	Ihold1	Ihold0
0x04	Vmax3	Vmax2	Vmax1	Vmax0	Vmin3	Vmin2	Vmin1	Vmin0
0x05	SecPos10	SecPos9	SecPos8	Shaft	Acc3	Acc2	Acc1	Acc0
0x06	SecPos7	SecPos6	SecPos5	SecPos4	SecPos3	SecPos2		
0x07	DelThr3	DelThr2	DelThr1	DelThr0	StepMode1	StepMode0	LOCKBT	LOCKBG

Parameters stored at address 0x00 and 0x01 and bit LOCKBT are already programmed in the OTP memory at circuit delivery. They correspond to the calibration of the circuit and are just documented here as an indication.

Each OPT bit is at '0' when not zapped. Zapping a bit will set it to '1'. Thus only bits having to be at '1' must be zapped. Zapping of a bit already at '1' is disabled.

Each OTP byte will be programmed separately (see command SetOTPparam).

Once OTP programming is completed, bit LOCKBG can be zapped, to disable future zapping, otherwise any OTP bit at '0' could still be zapped by using a SetOTPparam command.

Table 17: OTP Overwrite Protection

Lock Bit	Protected Bytes
LOCKBT (factory zapped before delivery)	0x00 to 0x01
LOCKBG	0x00 to 0x07

Note:
Zapped bits will really be "active" after a GetOTPparam or a ResetToDefault command or after a power-up.

The command used to load the application parameters via the I²C bus in the RAM prior to an OTP memory programming is SetMotorParam. This allows for a functional verification before using a SetOTPparam command to program and zap separately one OTP memory byte. A GetOTPparam command issued after each SetOTPparam command allows verification of the correct byte zapping.

14.2.7.2 Application Parameters Stored in OTP Memory

Except for the physical address PA[3:0], these parameters, although programmed in a non-volatile memory, can still be overridden in RAM by an I²C writing operation.

PA[3:0] In combination with hired wired (HW) address, it forms the physical address AD[6:0] of the stepper-motor. Up to 32 stepper motors can theoretically be connected to the same I²C bus.

AbsThr[3:0] Absolute threshold used for the motion detection

Index	AbsThr				AbsThr level (V)
0	0	0	0	0	Disable
1	0	0	0	1	0.5
2	0	0	1	0	1.0
3	0	0	1	1	1.5
4	0	1	0	0	2.0
5	0	1	0	1	2.5
6	0	1	1	0	3.0
7	0	1	1	1	3.5
8	1	0	0	0	4.0
9	1	0	0	1	4.5
A	1	0	1	0	5.0
B	1	0	1	1	5.5
C	1	1	0	0	6.0
D	1	1	0	1	6.5
E	1	1	1	0	7.0
F	1	1	1	1	7.5

DelThr[3:0] Delta threshold used for the motion detection

Index	DelThr				DelThr level (V)
0	0	0	0	0	Disable
1	0	0	0	1	0.25
2	0	0	1	0	0.50
3	0	0	1	1	0.75
4	0	1	0	0	1.00
5	0	1	0	1	1.25
6	0	1	1	0	1.50
7	0	1	1	1	1.75
8	1	0	0	0	2.00
9	1	0	0	1	2.25
A	1	0	1	0	2.50
B	1	0	1	1	2.75
C	1	1	0	0	3.00
D	1	1	0	1	3.25
E	1	1	1	0	3.50
F	1	1	1	1	3.75

Irun[3:0] Current amplitude value to be fed to each coil of the stepper motor. The table below provides the 16 possible values for IRUN.

Index	Irun				Run Current (mA)
0	0	0	0	0	59
1	0	0	0	1	71
2	0	0	1	0	84
3	0	0	1	1	100
4	0	1	0	0	119
5	0	1	0	1	141
6	0	1	1	0	168
7	0	1	1	1	200
8	1	0	0	0	238
9	1	0	0	1	283
A	1	0	1	0	336
B	1	0	1	1	400
C	1	1	0	0	476
D	1	1	0	1	566
E	1	1	1	0	673
F	1	1	1	1	800

Ihold[3:0] Hold current for each coil of the stepper motor. The table below provides the 16 possible values for IHOLD.

Index	Ihold				Hold Current (mA)
0	0	0	0	0	59
1	0	0	0	1	71
2	0	0	1	0	84
3	0	0	1	1	100
4	0	1	0	0	119
5	0	1	0	1	141
6	0	1	1	0	168
7	0	1	1	1	200
8	1	0	0	0	238
9	1	0	0	1	283
A	1	0	1	0	336
B	1	0	1	1	400
C	1	1	0	0	476
D	1	1	0	1	566
E	1	1	1	0	673
F	1	1	1	1	0

StepMode Indicator of stepping mode to be used.

StepMode		Step Mode
0	0	1/2 stepping
0	1	1/4 stepping
1	0	1/8 stepping
1	1	1/16 stepping

Shaft Indicator of reference position. If Shaft = '0', the reference position is the maximum inner position, whereas if Shaft = '1', the reference position is the maximum outer position.

SecPos[10:0] Secure position of the stepper motor. This is the position to which the motor is driven in case HW connection is lost. If SecPos[10:0] = "100 0000 0000", this means that secure position is disabled, e.g. the stepper motor will be kept in the position occupied at the moment these events occur.

- The secure position is coded on 11 bits only, providing actually the most significant bits of the position, the non coded least significant bits being set to '0'. See also Table 10.

Vmax[3:0] Maximum velocity

Index	Vmax				Vmax (full step/s)	Group
0	0	0	0	0	99	A
1	0	0	0	1	136	B
2	0	0	1	0	167	
3	0	0	1	1	197	
4	0	1	0	0	213	
5	0	1	0	1	228	
6	0	1	1	0	243	
7	0	1	1	1	273	C
8	1	0	0	0	303	
9	1	0	0	1	334	
A	1	0	1	0	364	
B	1	0	1	1	395	
C	1	1	0	0	456	
D	1	1	0	1	546	D
E	1	1	1	0	729	
F	1	1	1	1	973	

Vmin[3:0] Minimum velocity

Index	Vmin				Vmax factor
0	0	0	0	0	1
1	0	0	0	1	1/32
2	0	0	1	0	2/32
3	0	0	1	1	3/32
4	0	1	0	0	4/32
5	0	1	0	1	5/32
6	0	1	1	0	6/32
7	0	1	1	1	7/32
8	1	0	0	0	8/32
9	1	0	0	1	9/32
A	1	0	1	0	10/32
B	1	0	1	1	11/32
C	1	1	0	0	12/32
D	1	1	0	1	13/32
E	1	1	1	0	14/32
F	1	1	1	1	15/32

Acc[3:0] Acceleration and deceleration between Vmax and Vmin.

Index	Acc				Acceleration (full step/s²)
0	0	0	0	0	49 (*)
1	0	0	0	1	218 (*)
2	0	0	1	0	1004 .
3	0	0	1	1	3609 .
4	0	1	0	0	6228 .
5	0	1	0	1	8848 .
6	0	1	1	0	11409 .
7	0	1	1	1	13970 .
8	1	0	0	0	16531 .
9	1	0	0	1	19092 (*)
A	1	0	1	0	21886 (*)
B	1	0	1	1	24447 (*)
C	1	1	0	0	27008 (*)
D	1	1	0	1	29570 (*)
E	1	1	1	0	34925 (*)
F	1	1	1	1	40047 (*)

(*) restriction on speed

14.2.8. RAM Registers

Table 18: RAM Registers

Register	Mnemonic	Length (Bit)	Related Commands	Comment	Reset State
Actual position	ActPos	16	GetFullStatus2 GotoSecurePos ResetPosition	16-bit signed	Note 1
Last programmed position	Pos/ TagPos	16	GetFullStatus2 GotoSecurePos ResetPosition SetPosition	16-bit signed (see Positioning)	
Acceleration shape	AccShape	1	GetFullStatus1 ResetToDefault[1] SetMotorParam	'0' ⇒ normal acceleration from Vmin to Vmax '1' ⇒ motion at Vmin without acceleration	'0'
Coil peak current	Irun	4	GetFullStatus1 ResetToDefault[1] SetMotorParam	Operating current See look-up table Irun	From OTP memory
Coil hold current	Ihold	4	GetFullStatus1 ResetToDefault[1] SetMotorParam	Standstill current See look-up table Ihold	
Minimum velocity	Vmin	4	GetFullStatus1 ResetToDefault[1] SetMotorParam	See Section 13.3 Minimum Velocity See look-up table Vmin	
Maximum velocity	Vmax	4	GetFullStatus1 ResetToDefault[1] SetMotorParam	See Section 13.2 Maximum Velocity See look-up table Vmax	
Shaft	Shaft	1	GetFullStatus1 ResetToDefault[1] SetMotorParam	Direction of movement for positive velocity	
Acceleration/ deceleration	Acc	4	GetFullStatus1 ResetToDefault[1] SetMotorParam	See Section 13.4 Acceleration See look-up table Acc	
Secure position	SecPos	11	GetFullStatus2 ResetToDefault[1] SetMotorParam	Target position when LIN connection fails; 11 MSBs of 16-bit position (LSBs fixed to '0')	
Stepping mode	StepMode	2	GetFullStatus1 SetStallParam	See Section 13.1 Stepping Modes See look-up table StepMode	
Stall detection absolute threshold	AbsThr	4	GetFullStatus1 SetStallParam	See Section 15.4 Motion detection	
Stall detection delta threshold	DelThr	4	GetFullStatus1 SetStallParam	See Section 15.4 Motion detection	
Stall detection delay	FS2StallEn	3	GetFullStatus2 SetStallParam	See Section 15.4 Motion detection	'000'
Stall detection sampling	MinSamples	3	GetFullStatus2 SetStallParam	See Section 15.4 Motion detection	'000'
PWM jitter	PWMJEn	1	GetFullStatus2 SetStallParam	'1' means jitter is added	'0'
100% duty cycle stall disable	DC100SDis	1	GetFullStatus2 SetStallParam	'1' means stall detection is disabled in case PWM regulator runs at δ = 100%	'0'
PWM frequency	PWMFreq	1	SetMotorParam	'1' means 44 kHz is selected	'0'

Note:
A ResetToDefault command will act as a reset of the RAM content, except for ActPos and TagPos, which are registers that are not modified. Therefore, the application should not send a ResetToDefault during a motion, to avoid any unwanted change of parameter.

14.2.9. Flags Table

Table 19: Flags Table

Flag	Mnemonic	Length (Bit)	Related Commands	Comment	Reset State
Charge pump failure	CPFail	1	GetFullStatus1	'0' = charge pump OK '1' = charge pump failure reset only after GetFullStatus	'0'
Electrical defect	ElDef	1	GetFullStatus1	<OVC1> or <OVC2> or <open circuit 1> or <open circuit 2> or <CPFail> resets only after GetFullStatus1	'0'
External switch status	ESW	1	GetFullStatus1	'0' = open '1' = close	'0'
Motion status	Motion	3	GetFullStatus1	"x00" = Stop "001" = inner motion acceleration "010" = inner motion deceleration "011" = inner motion max. speed "101" = outer motion acceleration "110" = outer motion deceleration "111" = outer motion max. speed	"000"
Over current in coil X	OVC1	1	GetFullStatus1	'1' = over current reset only after GetFullStatus1	'0'
Over current in coil Y	OVC2	1	GetFullStatus1	'1' = over current reset only after GetFullStatus1	'0'
Secure position enabled	SecEn	1	Internal use	'0' if SecPos = "100 0000 0000" '1' otherwise	NA
Step loss	StepLoss	1	GetFullStatus1	'1' = step loss due to under voltage, over current or open circuit	'1'
Delta high stall	DelStallHi	1	GetFullStatus2	'1' = Vbemf > Average + DeltaThr	'0'
Delta low stall	DelStallLo	1	GetFullStatus2	'1' = Vbemf < Average – DeltaThr	'0'
Absolute stall	AbsStall	1	GetFullStatus2	'1' = Vbemf > AbsThr	'0'
Stall	Stall	1	GetFullStatus1	Stall detected	'0'
Temperature info	Tinfo	2	GetFullStatus1	"00" = normal temperature range "01" = low temperature warning "10" = high temperature warning "11" = motor shutdown	"00"
Thermal shutdown	TSD	1	GetFullStatus1	'1' = shutdown (> 155°C typ.) reset only after GetFullStatus1 and if <Tinfo> = "00"	'0'
Thermal warning	TW	1	GetFullStatus1	'1' = over temp (> 145°C) reset only after GetFullStatus1 and if <Tinfo> = "00"	'0'
Battery stop voltage	UV2	1	GetFullStatus1	'0' = Vbb > UV2 '1' = Vbb ≤ UV2 reset only after GetFullStatus1	'0'
Digital supply reset	VddReset	1	GetFullStatus1	Set at '1' after power-up of the circuit. If this was due to a supply micro-cut, it warns that the RAM contents may have been lost; can be reset to '0' with a GetFullStatus1 command.	'1'

14.2.10. Priority Encoder

The table below describes the state management performed by the main control block.

Table 20: Priority Encoder

State →	Stopped	GotoPos	DualPosition	SoftStop	HardStop	ShutDown
Command ↓	**Motor Stopped, Ihold in Coils**	**Motor Motion Ongoing**	**No Influence on RAM and TagPos**	**Motor Decelerating**	**Motor Forced to Stop**	**Motor Stopped, H-bridges in Hi-Z**
GetOTPparam	OTP refresh; I²C slave response	OTP refresh; I²C slave response	OTP refresh; I²C slave response	OTP refresh; I²C slave response	OTP refresh; I²C slave response	OTP refresh; I²C slave response
GetFullStatus1 [attempt to clear all flags] (note 1)	I²C slave response	I²C slave response	I²C slave response	I²C slave response	I²C slave response	I²C slave response; if (<TSD> or <ElFlag> = '0' then → **Stopped**
GetFullStatus2	I²C slave response	I²C slave response	I²C slave response	I²C slave response	I²C slave response	I²C slave response
ResetToDefault [ActPos and TagPos are not altered]	OTP refresh; OTP to RAM; AccShape reset	OTP refresh; OTP to RAM; AccShape reset	OTP refresh; OTP to RAM; AccShape reset (note 2)	OTP refresh; OTP to RAM; AccShape reset	OTP refresh; OTP to RAM; AccShape reset	OTP refresh; OTP to RAM; AccShape reset
SetMotorParam [Master takes care about proper update]	RAM update	RAM update (note 5)	RAM update	RAM update	RAM update	RAM update
SetStallParam	RAM update	RAM update	RAM update	RAM update	RAM update	RAM update
ResetPosition	TagPos and ActPos reset					TagPos and ActPos reset
SetPosition	TagPos updated; → **GotoPos**	TagPos updated	TagPos updated			
RunVelocity	Continuous motion; → **GotoPos**					
GotoSecPosition	If <SecEn> = '1' then TagPos = SecPos; → **GotoPos**	If <SecEn> = '1' then TagPos = SecPos	If <SecEn> = '1' then TagPos = SecPos			
DualPosition	→ **DualPosition**					
HardStop		→ **HardStop**; <StepLoss> = '1'	→ **HardStop**; <StepLoss> = '1'	→ **HardStop**; <StepLoss> = '1'		
SoftStop		→ **SoftStop**				
HardStop [⇔ (<CPFail> or <UV2> or <ElDef>) = '1' ⇒ <HS> = '1']	→ **Shutdown**	→ **HardStop**	→ **HardStop**	→ **HardStop**		
Thermal shutdown [<TSD> = '1']	→ **Shutdown**	→ **SoftStop**	→ **SoftStop**			
Motion finished	NA	→ **Stopped**	→ **Stopped**	→ **Stopped**; TagPos =ActPos	→ **Stopped**; TagPos =ActPos	NA

With the following color code:

	Command ignored
	Transition to another state
	Master is responsible for proper update (see Note 5)

Notes:

1) <ElFlag> = <CPFail> or <UV2> or <ElDef> or <VDDreset>
2) After power-on-reset, the Shutdown state is entered. The shutdown state can only be left after GetFullStatus1 command (so that the master could read the <VddReset> flag).
3) A DualPosition sequence runs with a separate set of RAM registers. The parameters that are not specified in a DualPosition command are loaded with the values stored in RAM at the moment the DualPosition sequence starts. AccShape is forced to '1' during second motion even if a ResetToDefault command is issued during a DualPosition sequence, in which case AccShape at '0' will be taken into account after the DualPosition sequence. A GetFullStatus1 command will return the default parameters for Vmax and Vmin stored in RAM.
4) Shutdown state can be left only when <TSD> and <ElFlag> flags are reset.
5) Flags can be reset only after the master could read them via a GetFullStatus1 command, and provided the physical conditions allow for it (normal temperature, correct battery voltage and no electrical or charge pump defect).
6) A SetMotorParam command sent while a motion is ongoing (state GotoPos) should not attempt to modify Acc and Vmin values. This can be done during a DualPosition sequence since this motion uses its own parameters, the new parameters will be taken into account at the next SetPosition command.
7) <SecEn> = '1' when register SecPos is loaded with a value different from the most negative value (i.e. different from 0x400 = "100 0000 0000")
8) <Stop> flag allows user to distinguish whether state stopped was entered after HardStop/SoftStop or not. <Stop> is set to '1' when leaving state HardStop or SoftStop and is reset during first clock edge occurring in state Stopped.
9) While in state stopped, if ActPos → TagPos there is a transition to state GotoPos. This transition has the lowest priority, meaning that <Stop>, <TSD>, etc. are first evaluated for possible transitions.
10) If <StepLoss> is active, then SetPosition and GotoSecurePosition commands are ignored (they will not modify TagPos register whatever the state). Other command like DualPosition or ResetPosition will be executed if allowed by current state. <StepLoss> can only be cleared by a GetFullStatus1 command.

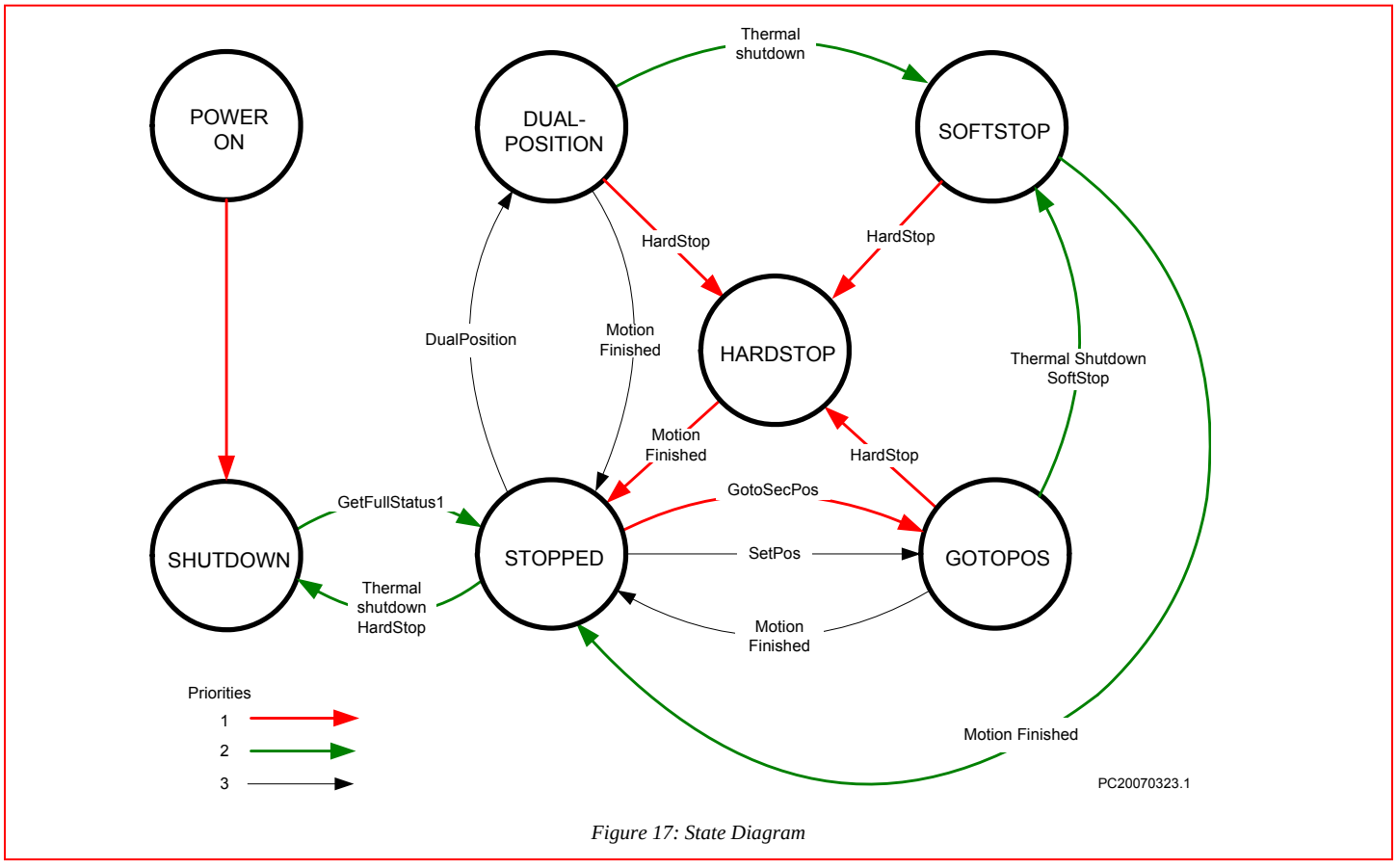

Figure 17: State Diagram

14.3 Motor Driver

14.3.1. Current Waveforms in the Coils

Figure 18 illustrates the current fed to the motor coils by the motor driver in half step mode.

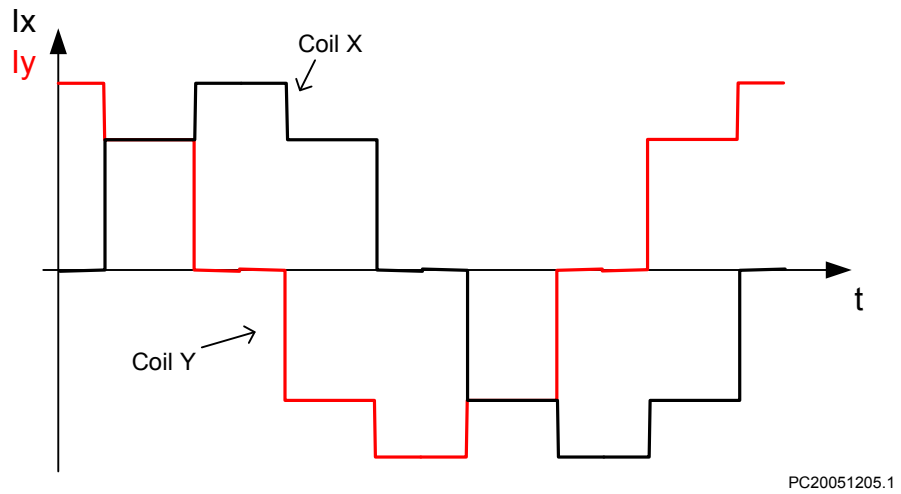

Figure 18: Current Waveforms in Motorcoils X and Y in Halfstep Mode

Whereas Figure 19 below shows the current fed to one coil in 1/16th micro stepping (one electrical period).

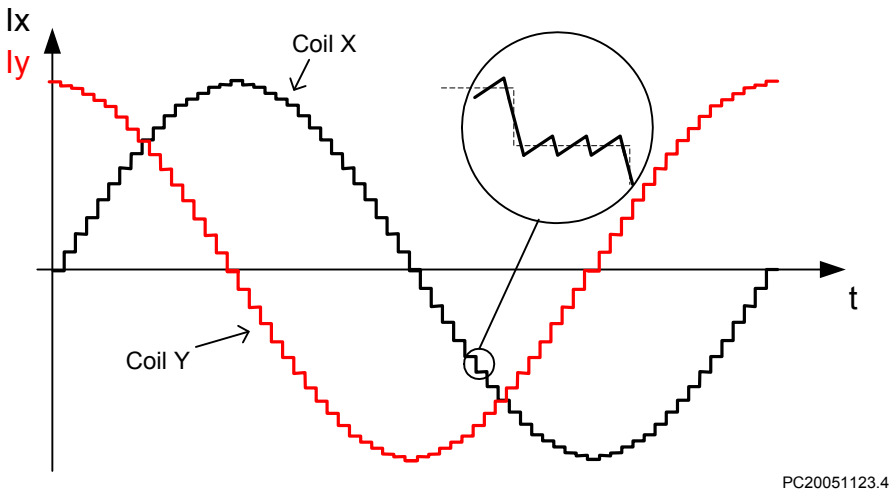

Figure 19: Current Waveforms in Motorcoils X and Y in 1/16th Microstep mode

14.3.2. PWM Regulation

In order to force a given current (determined by Irun or Ihold and the current position of the rotor) through the motor coil while ensuring high energy transfer efficiency, a regulation based on PWM principle is used. The regulation loop performs a comparison of the sensed output current to an internal reference, and features a digital regulation generating the PWM signal that drives the output switches. The

zoom over one micro-step in Figure 19 shows how the PWM circuit performs this regulation. To reduce the current ripple, a higher PWM frequency should be selectable. The RAM register PWMfreq is used for this (Bit 6 in Data 7 of SetMotorParam).

Table 21: PWM Frequency Selection

PWMfreq	Applied PWM Frequency
0	22.8 kHz
1	45.6 kHz

14.3.3. PWM Jitter

To lower the power spectrum for the fundamental and higher harmonics of the PWM frequency, jitter can be added to the PWM clock. The RAM register PWMJEn is used for this. (Bit 0 in Data 7 of SetMotorParam or SetStallParam).
Readout with GetFullStatus1.

Table 22: PWM Jitter Selection

PWMJEn	Status
0	Single PWM frequency
1	Added jitter to PWM frequency

14.3.4. Motor Starting Phase

At motion start, the currents in the coils are directly switched from **Ihold** to **Irun** with a new sine/cosine ratio corresponding to the first half (or micro) step of the motion.

14.3.5. Motor Stopping Phase

At the end of the deceleration phase, the currents are maintained in the coils at their actual DC level (hence keeping the sine/cosine ratio between coils) during the stabilization time t_{stab} (see Table 6). The currents are then set to the hold values, respectively, **Ihold** x sin(TagPos) and **Ihold** x cos(TagPos) as illustrated below. A new positioning order can then be executed.

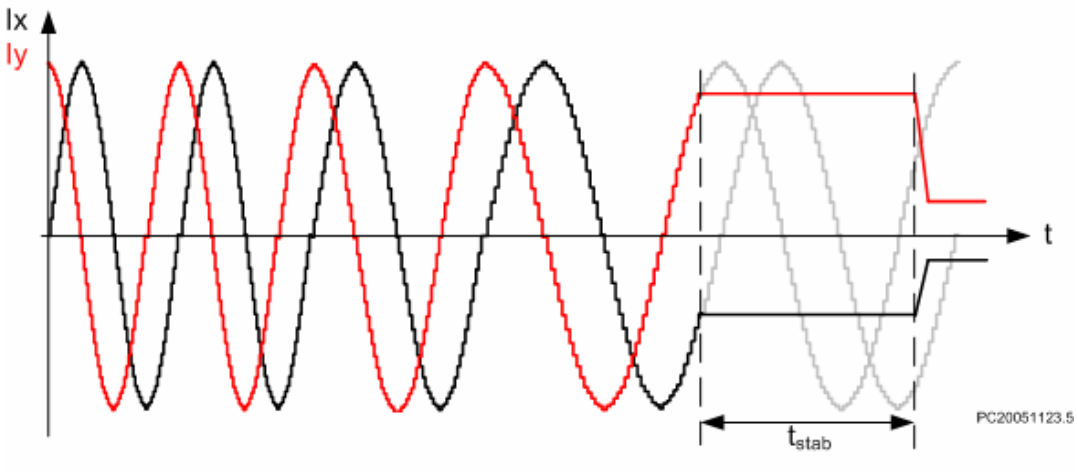

Figure 20: Motor Stopping Phase

14.3.6. Charge Pump Monitoring

If the charge pump voltage is not sufficient for driving the high side transistors (due to a failure), an internal HardStop command is issued. This is acknowledged to the master by raising the flag <CPFail> (available with command GetFullStatus1).

In case this failure occurs while a motion is ongoing, the flag <StepLoss> is also raised.

14.3.7. Electrical Defect on Coils, Detection and Confirmation

The principle relies on the detection of a voltage drop on at least one transistor of the H-bridge. Then the decision is taken to open the transistors of the defective bridge.

This allows the detection of the following short circuits:

- External coil short circuit
- Short between one terminal of the coil and Vbat or Gnd

Open circuits are detected by a 100 percent PWM duty cycle value during a long time.

Table 23: Electrical Defect Detection

Pins	Fault Mode
Yi or Xi	Short circuit to GND
Yi or Xi	Short circuit to Vbat
Yi or Xi	Open
Y1 and Y2	Short circuited
X1 and X2	Short circuited
Xi and Yi	Short circuited

Remark: One cannot detect an internal short in the motor.

14.3.8. Motor Shutdown Mode

A motor shutdown occurs when:

- The chip temperature rises above the thermal shutdown threshold Ttsd (see Thermal Shutdown Mode)
- The battery voltage goes below UV2 (see Battery Voltage Management)
- Flag <ElDef> = '1', meaning an electrical problem is detected on one or both coils, e.g. a short circuit
- Flag <CPFail> = '1', meaning there is a charge pump failure

A motor shutdown leads to the following:

- H-bridges in high impedance mode
- The TagPos register is loaded with the ActPos (to avoid any motion after leaving the motor shutdown mode)

The I^2C interface remains active, being able to receive orders or send status.

The conditions to get out of a motor shutdown mode are:

- Reception of a GetFullStatus1 command AND
- The four causes above are no longer detected

This leads to H-bridges in Ihold mode, hence the circuit is ready to execute any positioning command.

This can be illustrated in the following sequence given as an application tip. The master can check whether there is a problem or not and decide which application strategy to adopt.

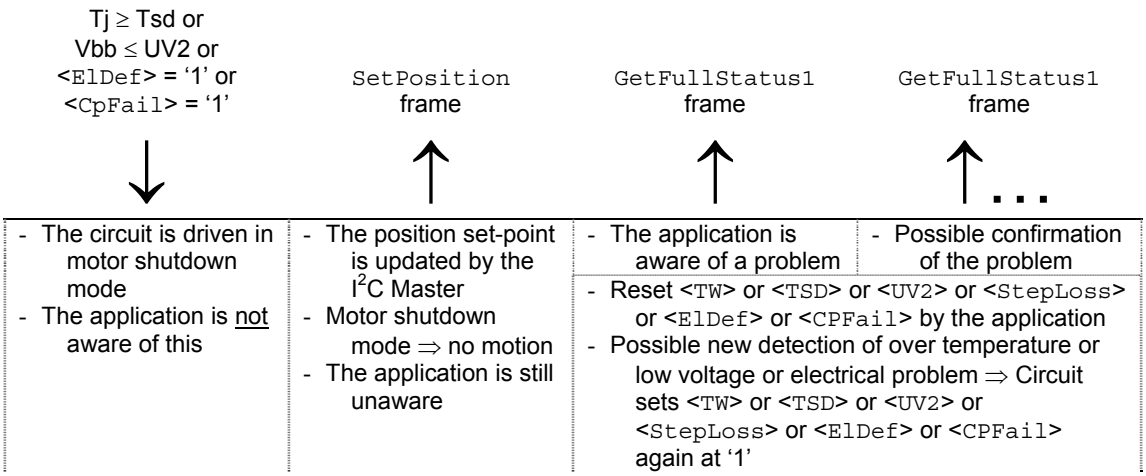

Figure 21: Example of Possible Sequence Used to Detect and Determine Cause of Motor Shutdown

Important: While in shutdown mode, since there is no hold current in the coils, the mechanical load can cause a step loss, which cannot be flagged by the AMIS-30624.

Warning: The application should limit the number of consecutive GetFullStatus1 commands to try to get the AMIS-30624 out of shutdown mode. When this proves to be unsuccessful, for example if there is a permanent defect, the reliability of the circuit could be altered since GetFullStatus1 attempts to disable the protection of the H-bridges.

14.4 Motion Detection

Motion detection is based on the back emf generated internally in the running motor. When the motor is blocked, for example when it hits the end-position, the velocity and as a result also the generated back emf, is disturbed. The AMIS-30624 senses the back emf, calculates a moving average and compares the value with two independent threshold levels: Absolute threshold (AbsThr[3:0]) and Delta threshold (DelThr[3:0]). Instructions for the correct use of these two levels in combination with three additional parameters (MinSamples, FS2StallEn and DC100SDis) are outside the scope of this datasheet. Detailed information is available in a dedicated white paper "Robust Motion Control with AMIS-3062x Stepper Motor Drivers", available on http://www.amis.com/.

If the motor is accelerated by a pulling or propelling force and the resulting back emf increases above the Delta threshold (+ ΔTHR), then <DelStallHi> is set. When the motor is slowing down and the resulting back emf decreases below the Delta threshold (- ΔTHR), then <DelStallLo> is set. When the motor is blocked and the velocity is zero after the acceleration phase, the back emf is low or zero. When this value is below the Absolute threshold, <AbsStall> is set. The <Stall> flag is the OR function of <DelStallLo> OR <DelStallHi> OR <AbsStall>.

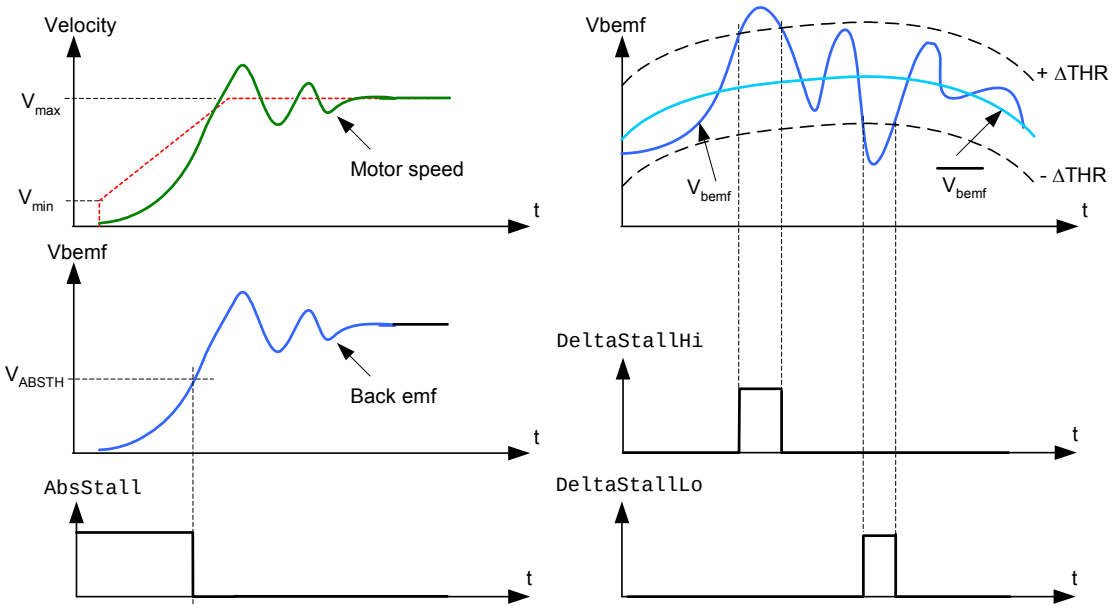

Figure 22: Triggering of the Stall Flags in Function of Measured Back emf and the Set Threshold Levels

Table 24: Truth Table

Condition	<DelStallLo>	<DelStallHi>	<AbsStall>	<Stall>
Vbemf < Average - DelThr	1	0	0	1
Vbemf > Average + DelThr	0	1	0	1
Vbemf < AbsThr	0	0	1	1

The motion will only be detected when the motor is running at the maximum velocity, not during acceleration or deceleration.
If during positioning a mechanical obstacle is detected (stall), an (internal) hardstop is generated. The motor will stop immediately and as a consequence the <StepLoss> and <Stall> flags are set. The position in the internal counter will be copied to the ActPos register. All flags can be read out with the `GetFullStatus1`.

If Stall appears during DualPosition then the first phase is cancelled (via internal Hardstop) and after timeout (26.6ms) the second phase at V_{min} starts.

Important Remark:
Using `GetFullStatus1` will read **AND** clear the following flags: `<Steploss>`, `<Stall>`, `<AbsStall>`, `<DelStallLo>`, and `<DelStallHi>`. New positioning is possible and the ActPos register will be further updated.

Motion detection is disabled when the RAM registers AbsThr[3:0] and DelThr[3:0] are empty or zero. Both levels can be programmed using the I^2C command `SetStallParam` in the registers AbsThr[3:0] and DelThr[3:0]. Also in the OTP register AbsThr[3:0] and DelThr[3:0] can be set using the I^2C command `SetOTPParam`. These values are copied in the RAM registers during power on reset.

Value Table:

Table 25: Absolute Threshold Settings

AbsThr Index	AbsThr Level (V)
0	Disable
1	0.5
2	1.0
3	1.5
4	2.0
5	2.5
6	3.0
7	3.5
8	4.0
9	4.5
A	5.0
B	5.5
C	6.0
D	6.5
E	7.0
F	7.5

Table 26: Delta Threshold Settings

DelThr Index	DelThr Level (V)
0	Disable
1	0.25
2	0.50
3	0.75
4	1.00
5	1.25
6	1.50
7	1.75
8	2.00
9	2.25
A	2.50
B	2.75
C	3.00
D	3.25
E	3.50
F	3.75

MinSamples

MinSamples[2:0] is a Bemf sampling delay time expressed in number of PWM cycles, for more information please refer to the white paper “Robust Motion Control with AMIS-3062x Stepper Motor Drivers”.

Table 27: Back emf Sample Delay Time

Index	MinSamples[2:0]	t_{DELAY} (µs)	
		PWMfreq = 0	PWMfreq = 1
0	000	87	43
1	001	130	65
2	010	174	87
3	011	217	109
4	100	261	130
5	101	304	152
6	110	348	174
7	111	391	196

FS2StallEn

If AbsThr or DelThr <>0 (i.e. motion detection is enabled), then stall detection will be activated AFTER the acceleration ramp + an additional number of full-steps, according to the following table:

Table 28: Activation Delay of Motion Detection

Index	FS2StallEn[2:0]	Delay (Full Steps)
0	000	0
1	001	1
2	010	2
3	011	3
4	100	4
5	101	5
6	110	6
7	111	7

For more information please refer to the white paper “Robust Motion Control with AMIS-3062x Stepper Motor Drivers”.

DC100StEn

When a motor with large back – e.m.f. is operated at high velocity and low supply voltage, then the PWM duty cycle can be as high as 100 percent. This indicates that the supply is too low to generate the required torque and might also result in erroneously triggering the stall detection. The bit “DC100StEn” (Bit 1 in Data 7 of SetStallParam) enables the function where stall detection is switched off when PWM duty cycle equals 100 percent. For more information the white paper “Robust Motion Control with AMIS-3062x Stepper Motor Drivers”.

Motion Qualification Mode

This mode is useful to debug motion parameters and to verify the stability of stepper motor systems. The motion qualification mode is entered by means of the I^2C command TestBemf. The SWI pin will be converted into an analog output on which the Bemf integrator output can be measured. Once activated, it can only be stopped after a POR. During the back emf observation, reading of the SWI state is internally forbidden. More information is available in the white paper “Robust Motion Control with AMIS-3062x Stepper Motor Drivers”.

15.0 I²C Bus Description

15.1 General Description

AMIS-30624 uses a simple bi-directional 2-wire bus for efficient inter-ic control. This bus is called the Inter IC or I²C-bus.

Features include:

- Only two bus lines are required; a serial data line (SDA) and a serial clock line (SCK).
- Each device connected to the bus is software addressable by a unique address and simple master/slave relationships exists at all times; master can operate as master-transmitter or as master receiver.
- Serial, 8-bit oriented, bi-directional data transfers can be made up to 400 kbit/s.
- On-chip filtering rejects spikes on the bus data line to preserve data integrity.
- No need to design bus interfaces because I²C-bus interface is already integrated on-chip.
- IC's can be added to or removed from a system without affecting any other circuits on the bus.

15.2 Concept

The I²C-bus consists of two wires, serial data (SDA) and serial clock (SCK), carrying information between the devices connected on the bus. Each device connected to the bus is recognized by a unique address and operates as either a transmitter or receiver, depending on the function of the device. AMIS-30624 can both receive and transmit data. In addition to transmitters and receivers, devices can also be considered as masters or slaves when performing data transfers. AMIS-30624 is a slave device. See Table 30.

Table 29: Definition of I²C –bus Terminology

Term	Description
Transmitter	The device which sends data on the bus
Receiver	The device which receives data from the bus
Master	The device which initiates a transfer, generates clock signals and terminates a transfer
Slave	The devices addressed by a master
Synchronization	Procedure to synchronizer the clock signals of two or more devices

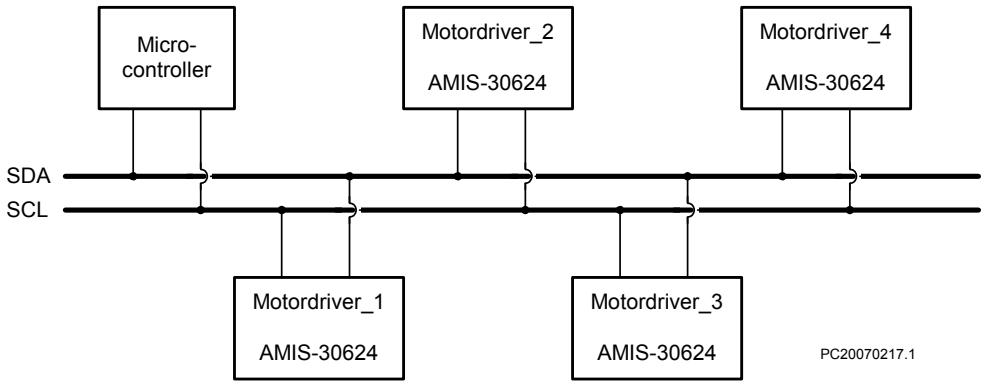

Figure 23: Example of an I²C-bus Configuration Using One Microcontroller and Four Slaves

Figure 23 highlights the master-slave and receiver-transmitter relationships to be found on the I²C-bus. It should be noted that these relationships are not permanent but only depend on the direction of data transfer at that time. The transfer of data would proceed as follows:

1) Suppose the microcontroller wants to send information to motordriver_1:

- Microcontroller (master) addresses motordriver_1 (slave)
- Microcontroller (master-transmitter) sends data to motordriver_1 (slave-receiver)
- Microcontroller terminates the transfer

2) If the microcontroller wants to receive information from motordriver_2:

- Microcontroller (master) addresses motordriver_2 (slave)
- Microcontroller (master-receiver) receives data from motordriver_2 (slave-transmitter)
- Microcontroller terminates the transfer

Even in this case the master generates the timing and terminates the transfer.

Generation of the signals on the I^2C-bus is always the responsibility of the master device. It generates its own clock signal when transferring data on the bus. Bus clock signals from a master can only be altered when they are stretched by a slow slave device holding-down the clock line.

15.3 General Characteristics

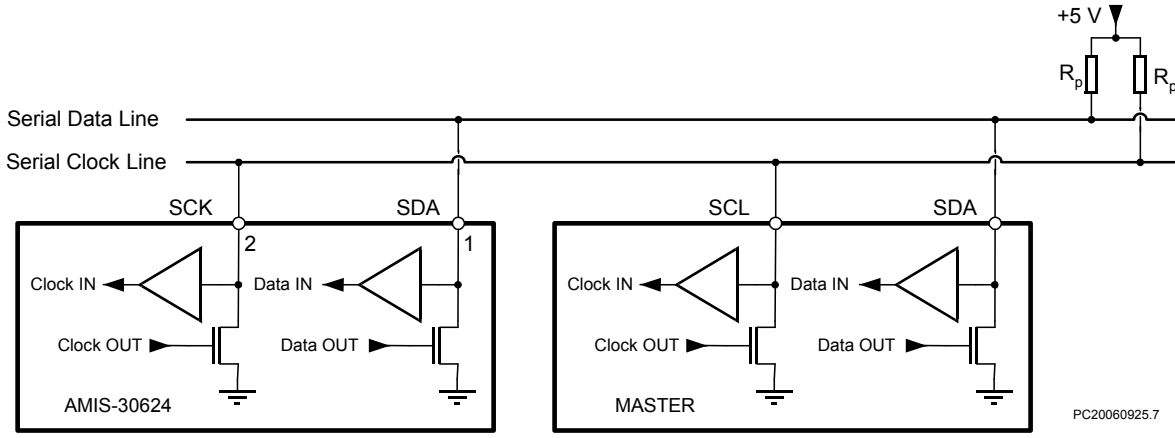

Figure 24: Connection of a Device to the I^2C-bus

Both SDA and SCK are bi-directional lines connected to a positive supply voltage via a pull-up resistor (see Figure 24). When the bus is free both lines are HIGH. The output stages of the devices connected to the bus must have an open drain to perform the wired-AND function. Data on the I^2C-bus can be transferred up to 400kbits/s in fast mode. The number of interfaces connected to the bus is dependent on the maximum bus capacitance limit (See C_B in Table 6) and the available number of addresses.

15.4 Bit Transfer

The levels for logic ‘0’ (LOW) and ‘1’ (HIGH) are not fixed in the I^2C standard but dependent on the used VDD level. Using AMIS-30624, the levels are specified in Table 5. One clock pulse is generated for each data bit transferred.

15.4.1. Data Validity

The data on the SDA line must be stable during the HIGH period of the clock. The HIGH or LOW state of the data line can only change when the clock signal on the SCL line is LOW (See Figure 25).

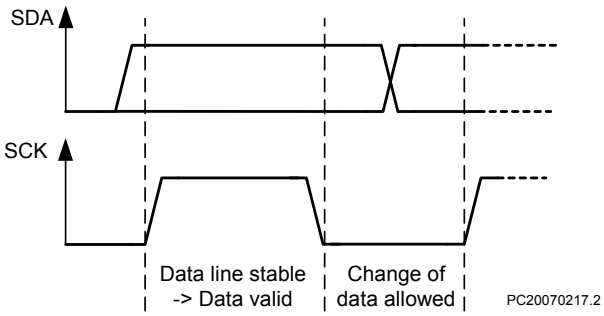

Figure 25: Bit Transfer on the I²C-bus

15.4.2. START and STOP Conditions

Within the procedure of the I²C-bus, unique situations arise, which are defined as START (S) and STOP (P) conditions (See Figure 26).

A HIGH to LOW transition on the SDA line while SCK is HIGH is one such unique case. This situation indicates a START condition. LOW to HIGH transition on the SDA line while SCK is HIGH defines a STOP condition.

START and STOP conditions are always generated by the master. The bus is considered to be busy after the START condition. The bus is considered to be free again a certain time after the STOP condition. The bus free situation is specified as t_{BUF} in Table 6.

The bus stays busy if a repeated START (Sr) is generated instead of a STOP condition. In this respect, the START (S) and repeated START (Sr) conditions are functionally identical (See Figure 27). The symbol S will be used to represent START and repeated START, unless otherwise noted.

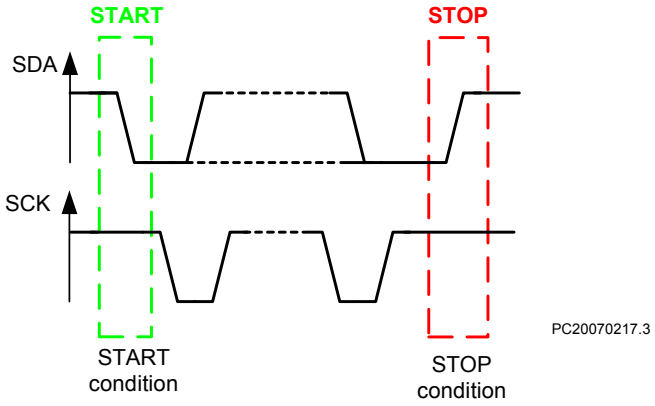

Figure 26: START and STOP Conditions

15.5 Transferring Data

15.5.1. Byte Format

Every byte put on the SDA line must be 8-bits long. The number of bytes that can be transmitted per transfer to AMIS-30624 is restricted to eight. Each byte has to be followed by an acknowledge bit. Data is transferred with the most significant bit (MSB) first (See Figure 27). If a slave can't receive or transmit another complete byte of data, it can hold the clock line SCK LOW to force the master into a wait state. Data transfer then continues when the slave is ready for another byte of data and releases clock line SCK.

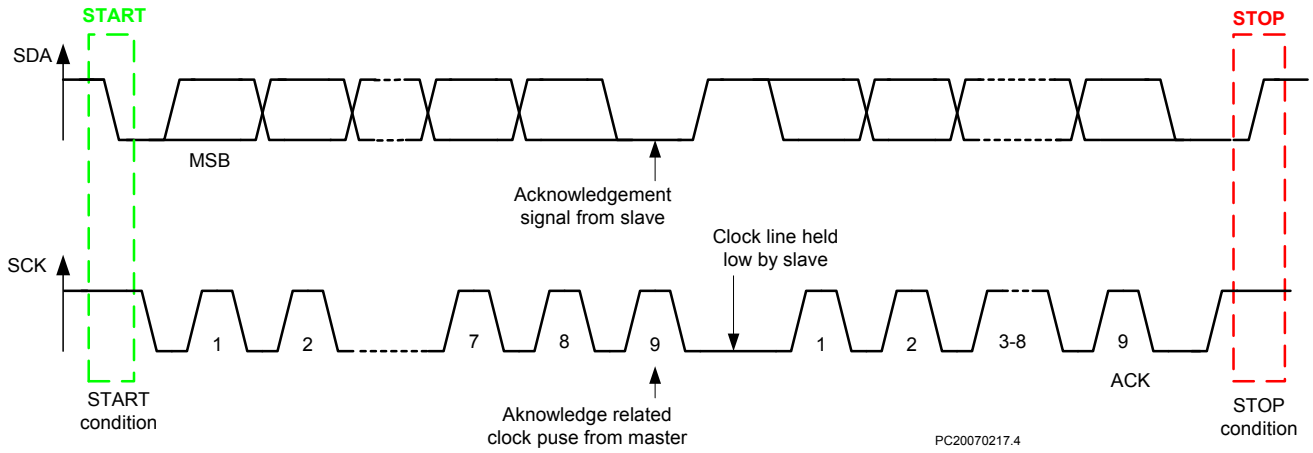

Figure 27: Data Transfer on the I²C-bus

15.5.2. Acknowledge

Data transfer with acknowledge is obligatory. The acknowledge-related clock pulse is generated by the master. The transmitter releases the SDA line (HIGH) during the acknowledge clock pulse. The receiver must pull down the SDA line during the acknowledge clock pulse so that it remains stable LOW during the HIGH period of this clock pulse (see Figure 28). Of course, set-up and hold times must also taken into account (see Table 6). When AMIS-30624 doesn't acknowledge the slave address, the data line will be left HIGH. The master can than generate either a STOP condition to abort the transfer, or a repeated START condition to start a new transfer.

If AMIS-30624 as slave-receiver does acknowledge the slave address but later in the transfer cannot receive any more data bytes, this is indicated by generating a not-acknowledge on the first byte to follow. The master generates than a STOP or a repeated START condition.

If a master-receiver is involved in the transfer, it must signal the end of data to the slave-transmitter by not generating an acknowledge on the last byte that was clocked out of the slave. AMIS-30624 as slave-transmitter shall release the data line to allow the master to generate STOP or repeated START condition.

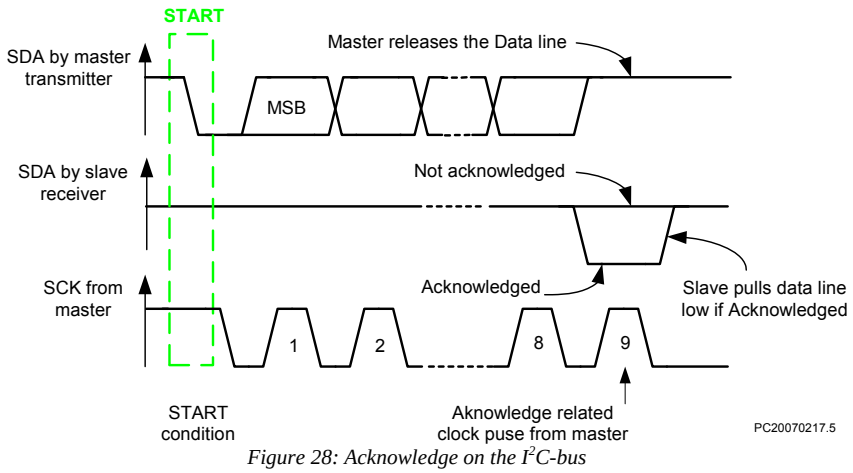

Figure 28: Acknowledge on the I²C-bus

15.5.3. Clock Generation

The master generates the clock on the SCK line to transfer messages on the I^2C-bus. Data is only valid during the HIGH period of the clock.

15.6 Data Formats with 7-bit Addresses

Data transfers follow the format shown in Figure 29. After the START condition (S), a slave address is sent. This address is 7-bit long followed by an eighth bit which is a data direction bit (R/W) – a 'zero' indicates a transmission (WRITE), a 'one' indicates a request for data (READ). A data transfer is always terminated by a STOP condition (P) generated by the master.

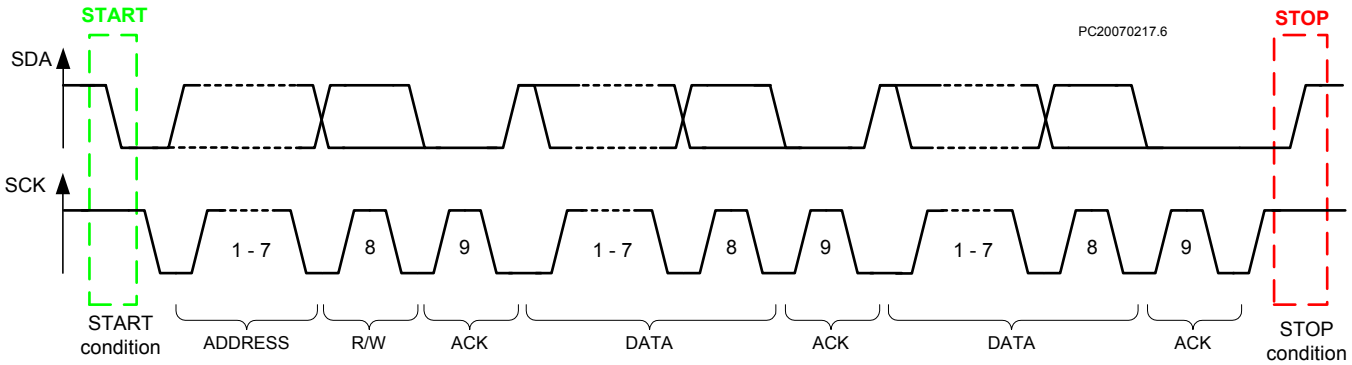

Figure 29: A Complete Data Transfer

However, if a master still wishes to communicate on the bus, it can generate a repeated START (Sr) and address another slave without first generating a STOP condition. Various combinations of read/write formats are then possible within such a transfer.

15.6.1. Data Transfer Formats

15.6.1.1 Writing Data to AMIS-30624

When writing to AMIS-30624, the master-transmitter transmits to slave-receiver and the transfer direction is not changed. A complete transmission consists of:

- Start condition
- The slave address (7-bit)
- Read/Write bit ('0' = write)
- Acknowledge bit
- Any further data bytes are followed by an acknowledge bit. The acknowledge bit is used to signal a correct reception of the data to the transmitter. In this case the AMIS-30624 pulls the SDA line to '0'. The AMIS-30624 reads the incoming data at SDA on every rising edge of the SCK signal
- Stop condition to finish the transmission
-

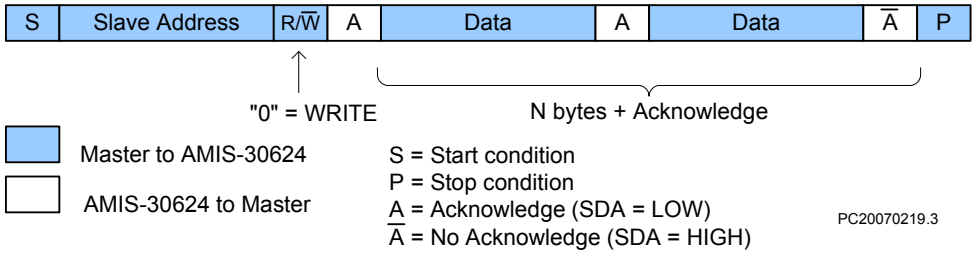

Figure 30: Master Writing Data to AMIS-30624

Some commands for the AMIS-30624 are supporting eight bytes of data, other commands are transmitting two bytes of data. See Table 30.

15.6.1.2 Reading Data to AMIS-30624

When reading data from AMIS-30624 two transmissions are needed:

1) The first transmission consists of two bytes of data:

- The first byte contains the slave address and the write bit.
- The second byte contains the address of an internal register in the AMIS-30624. This internal register address is stored in the circuit RAM.

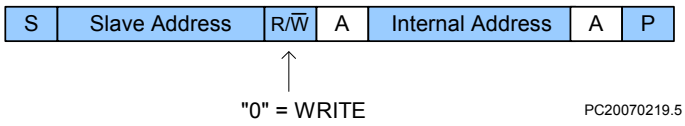

Figure 31: Master Reading Data from AMIS-30624: First Transmission is Addressing

2) The second transmission consists of the slave address and the read bit. Then the master can read the data bits on the SDA line on every rising edge of signal SCK. After each byte of data the master has to acknowledge correct data reception by pulling SDA LOW. The last byte is not acknowledged by the master and therefore the slave knows the end of transmission.

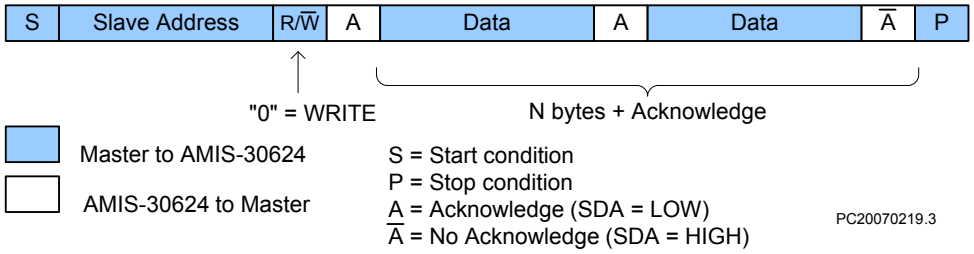

Figure 32: Master Reading Data from AMIS-30624: Second Transmission is Reading Data

Notes:

(1) Each byte is followed by an acknowledgment bit as indicated by the A or Ā in the sequence.

(2) I^2C-bus compatible devices must reset their bus logic on receipt of a START condition such that they all anticipate the sending of a slave address, even if these START conditions are not positioned according to the proper format.

(3) A START condition immediately followed by a STOP condition (void message) is an illegal format.

15.7 7-bit Addressing

The addressing procedure for the I^2C-bus is such that the first byte after the START condition usually determines which slave will be selected by the master. The exception is the general call address which can call all devices. When this address is used all devices should respond with an acknowledge. The second byte of the general call address then defines the action to be taken.

15.7.1. Definition of Bits in the First Byte

The first seven bits of the first byte make up the slave address. The eighth bit is the least significant bit (LSB). It determines the direction of the message. If the LSB is a “zero” it means that the master will write information to a selected slave. A “one” in this position means that the master will read information from the slave. When an address is sent, each device in a system compares the first seven bits after the START condition with its address. If they match, the device considers itself addressed by the master as a slave-receiver or slave-transmitter, depending on the R/ $\overline{W}$ bit.

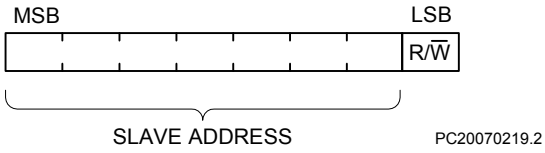

Figure 33: First Byte after START Procedure

AMIS-30624 is provided with a physical address in order to discriminate this circuit from other circuits on the I^2C bus. This address is coded on seven bits (two bits being internally hardwired to '1'), yielding the theoretical possibility of 32 different circuits on the same bus. It is a combination of four OTP memory bits (OTP Memory Structure) and of the externally hardwired address bits (pin HW). HW must either be connected to ground or to Vbat. When HW is not connected and is left floating, correct functionality of the positioner is not guaranteed. The motor will be driven to the programmed secure position (See Hardwired Address – OPEN).

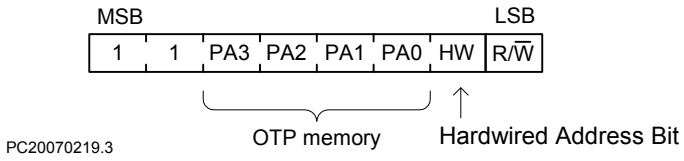

Figure 34: First Byte after START Procedure

15.7.2. General Call Address

The AMIS-30624 supports also a "general call" address "000 0000", which can address all devices. When this address is used all devices should respond with an acknowledge. The second byte of the general call address then defines the action to be taken.

16.0 I²C Application Commands

16.1 Introduction

Communications between the AMIS-30624 and a 2-wire serial bus interface master takes place via a large set of commands.

Reading commands are used to:

- Get actual status information, e.g. error flags
- Get actual position of the stepper motor
- Verify the right programming and configuration of the AMIS-30624

Writing commands are used to:

- Program the OTP memory
- Configure the positioner with motion parameters (max/min speed, acceleration, stepping mode, etc.)
- Provide target positions to the Stepper motor

The I²C-bus master will have to use commands to manage the different application tasks the AMIS-30624 can feature. The commands summary is given in Table 30.

16.2 Commands Table

Table 30: I²C Commands with Corresponding ROM Pointer

Command Mnemonic	Function	Command Byte	
		Binary	Hexadecimal
GetFullStatus1	Returns complete status of the chip	"1000 0001"	0x81
GetFullStatus2	Returns actual, target and secure position	"1111 1100"	0xFC
GetOTPParam	Returns OTP parameter	"1000 0010"	0x82
GotoSecurePosition	Drives motor to secure position	"1000 0100"	0x84
HardStop	Immediate full stop	"1000 0101"	0x85
ResetPosition	Sets actual position to zero	"1000 0110"	0x86
ResetToDefault	Overwrites the chip RAM with OTP contents	"1000 0111"	0x87
SetDualPosition	Drives the motor to two different positions with different speed	"1000 1000"	0x88
SetMotorParam	Sets motor parameter	"1000 1001"	0x89
SetOTP	Zaps the OTP memory	"1001 0000"	0x90
SetPosition	Programs a target and secure position	"1000 1011"	0x8B
SetStallParam	Sets stall parameters	"1001 0110"	0x96
SoftStop	Motor stopping with deceleration phase	"1000 1111"	0x8F
Runvelocity	Drives motor continuously	"1001 0111"	0x97
TestBemf	Outputs Bemf voltage on pin SWI	"1001 1111"	0x9F

These commands are described hereafter, with their corresponding I²C frames. Refer to Data Transfer Formats for more details. A color coding is used to distinguish between master and slave parts within the frames. An example is shown below.

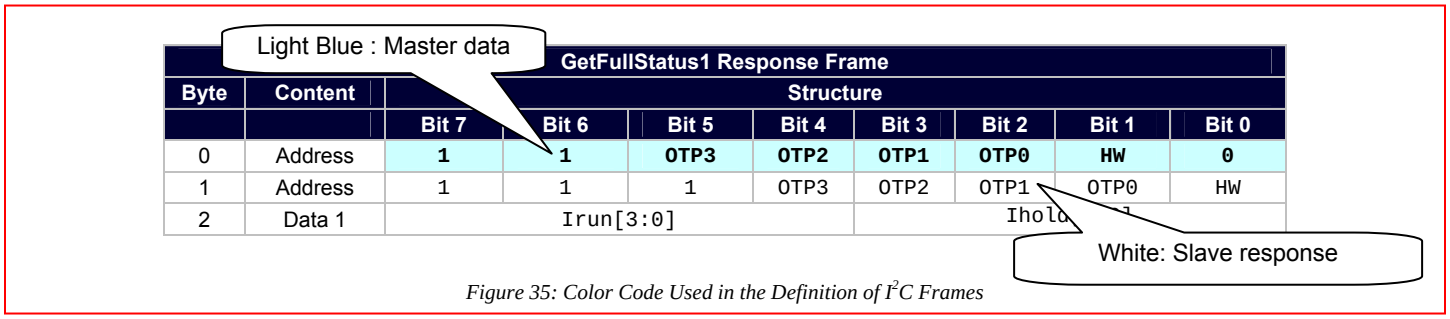

Figure 35: Color Code Used in the Definition of I²C Frames

16.3 Application Commands

16.3.1. GetFullStatus1

This command is provided to the circuit by the master to get a complete status of the circuit and of the stepper motor. Refer to Table 18 and Table 19 to see the meaning of the parameters sent back to the I^2C master.

Note: A `GetFullStatus1` command will attempt to reset flags <TW>, <TSD>, <UV2>, <ElDef>, <StepLoss>, <CPFail>, <OVC1>, <OVC2>, and <VddReset>.

`GetFullStatus1` corresponds to the following I^2C command frame:

GetFullStatus1 Command Frame									
Byte	**Content**	**Structure**							
		Bit 7	**Bit 6**	**Bit 5**	**Bit 4**	**Bit 3**	**Bit 2**	**Bit 1**	**Bit 0**
0	Address	**1**	**1**	**OTP3**	**OTP2**	**OTP1**	**OTP0**	**HW**	**0**
1	Command	**1**	**0**	**0**	**0**	**0**	**0**	**0**	**1**

GetFullStatus1 Response Frame									
Byte	**Content**	**Structure**							
		Bit 7	**Bit 6**	**Bit 5**	**Bit 4**	**Bit 3**	**Bit 2**	**Bit 1**	**Bit 0**
0	Address	**1**	**1**	**OTP3**	**OTP2**	**OTP1**	**OTP0**	**HW**	**1**
1	Address	1	1	1	OTP3	OTP2	OTP1	OTP0	HW
2	Data 1	Irun[3:0]				Ihold[3:0]			
3	Data 2	Vmax[3:0]				Vmin[3:0]			
4	Data 3	AccShape	StepMode[1:0]		Shaft	Acc[3:0]			
5	Data 4	VddReset	StepLoss	ElDef	UV2	TSD	TW	Tinfo[1:0]	
6	Data 5	Motion[2:0]			ESW	OVC1	OVC2	Stall	CPFail
7	Data 6	1	1	1	1	1	1	1	1
8	Data 7	AbsThr[3:0]				DelThr[3:0]			

Where:

`OTP(n)`	OTP address bits PA[3:0]
`HW`	Hardwired address bit
`Irun[3:0]`	Operating current in the motor coil
`Ihold[3:0]`	Standstill current in the motor coil
`Vmax[3:0]`	Maximum velocity
`Vmin[3:0]`	Minimum velocity
`AccShape`	Enables motion without acceleration
`StepMode[1:0]`	Step mode definition
`Shaft`	Direction of movement
`Acc[3:0]`	Acceleration form minimum to maximum velocity
`VddReset`	Reset of digital supply
`StepLoss`	Step loss occurred
`ElDef`	Electrical defect
`UV2`	Battery under voltage detected
`TSD`	Thermal shutdown
`TW`	Thermal warning
`Tinfo[1:0]`	Temperature Info
`Motion[2:0]`	Motion status
`ESW`	External switch status
`OVC1`	Over current in X-coil detected
`OVC2`	Over current in Y-coil detected
`Stall`	Stall detected
`CPFail`	Charge pump failure
`AbsThr[3:0]`	Stall detection absolute threshold
`DelThr[3:0]`	Stall detection delta threshold

16.3.2. GetFullStatus2

This command is provided to the circuit by the master to get the actual, target and secure position of the stepper motor. Both the actual and target position are returned in signed two's complement 16-bit format. Secure position is coded in 10-bit format. According to the programmed stepping mode the LSBs of `ActPos[15:0]` and `TagPos[15:0]` may have no meaning and should be assumed to be '0'. This command also gives additional information concerning stall detection. Refer to Table 18 and Table 19 to see the meaning of the parameters sent back to the I^2C master.

`GetFullStatus2` corresponds to the following I^2C command frame:

GetFullStatus2 Command Frame									
Byte	**Content**	**Structure**							
		Bit 7	**Bit 6**	**Bit 5**	**Bit 4**	**Bit 3**	**Bit 2**	**Bit 1**	**Bit 0**
0	Address	**1**	**1**	**OTP3**	**OTP2**	**OTP1**	**OTP0**	**HW**	**0**
1	Command	**1**	**1**	**1**	**1**	**1**	**1**	**0**	**0**

GetFullStatus2 Response Frame									
Byte	**Content**	**Structure**							
		Bit 7	**Bit 6**	**Bit 5**	**Bit 4**	**Bit 3**	**Bit 2**	**Bit 1**	**Bit 0**
0	Address	**1**	**1**	**OTP3**	**OTP2**	**OTP1**	**OTP0**	**HW**	**1**
1	Address	1	1	1	OTP3	OTP2	OTP1	OTP0	HW
2	Data 1	ActPos[15:8]							
3	Data 2	ActPos[7:0]							
4	Data 3	TagPos[15:8]							
5	Data 4	TagPos[7:0]							
6	Data 5	SecPos[7:0]							
7	Data 6	FS2StallEn[2:0]			1	DC100	SecPos[10:8]		
8	Data 7	AbsStall	DelStallLo	DelStallHi	MinSamples[2:0]			DC100StEn	PWMJEn

Where:

`OTP(n)`	OTP address bits PA[3:0]
`HW`	Hardwired address bit
`ActPos[15:0]`	Actual position
`TagPos[15:0]`	Target position
`SecPos[10:0]`	Secure position
`FS2StallEn[2:0]`	Number of full steps after stall detection is enabled
`DC100`	Flag indicating PWM is at 100 percent duty cycle
`AbsStall`	Stall detected because the absolute threshold is not reached
`DelStallLo`	Stall detected because the delta threshold is under crossed
`DelStallHi`:	Stall detected because the delta threshold is crossed
`MinSamples[2:0]`	Back-emf sampling delay time
`DC100StEn`	Enables the switch off of stall detection when DC100 = 1
`PWMJEn`	PWM jitter enable

16.3.3. GetOTPParam

This command is provided to the circuit by the I²C master to read the content of the OTP memory. More information can be found in OTP Memory Structure.

`GetOTPParam` corresponds to the following I²C command frame:

GetOTPParam Command Frame									
Byte	Content	Structure							
		Bit 7	Bit 6	Bit 5	Bit 4	Bit 3	Bit 2	Bit 1	Bit 0
0	Address	1	1	OTP3	OTP2	OTP1	OTP0	HW	0
1	Command	1	0	0	0	0	0	1	0

GetOTPParam Response Frame									
Byte	Content	Structure							
		Bit 7	Bit 6	Bit 5	Bit 4	Bit 3	Bit 2	Bit 1	Bit 0
0	Address	1	1	OTP3	OTP2	OTP1	OTP0	HW	1
1	OTP byte 0	OTP byte @0x00							
2	OTP byte 1	OTP byte @0x01							
3	OTP byte 2	OTP byte @0x02							
4	OTP byte 3	OTP byte @0x03							
5	OTP byte 4	OTP byte @0x04							
6	OTP byte 5	OTP byte @0x05							
7	OTP byte 6	OTP byte @0x06							
8	OTP byte 7	OTP byte @0x07							

16.3.4. GotoSecurePosition

This command is provided by the I²C master to one or all the stepper motors to move to the secure position `SecPos[10:0]`. See the priority encoder description for more details. The priority encoder table also acknowledges the cases where a `GotoSecurePosition` command will be ignored.

`GotoSecurePosition` corresponds to the following I²C command frame:

GotoSecurePosition Command Frame									
Byte	Content	Structure							
		Bit 7	Bit 6	Bit 5	Bit 4	Bit 3	Bit 2	Bit 1	Bit 0
0	Address	1	1	OTP3	OTP2	OTP1	OTP0	HW	0
1	Command	1	0	0	0	0	1	0	0

16.3.5. HardStop

This command will be internally triggered when an electrical problem is detected in one or both coils, leading to shutdown mode. If this occurs while the motor is moving, the <`StepLoss`> flag is raised to allow warning of the I²C master at the next `GetStatus1` command that steps may have been lost. Once the motor is stopped, `ActPos` register is copied into `TagPos` register to ensure keeping the stop position. The I²C master for some safety reasons can also issue a HardStop command.

`HardStop` corresponds to the following I²C command frame:

HardStop Command Frame									
Byte	Content	Structure							
		Bit 7	Bit 6	Bit 5	Bit 4	Bit 3	Bit 2	Bit 1	Bit 0
0	Address	1	1	OTP3	OTP2	OTP1	OTP0	HW	0
1	Command	1	0	0	0	0	1	0	1

16.3.6. ResetPosition

This command is provided to the circuit by the I²C master to reset `ActPos` and `TagPos` registers to zero. This can be helpful to prepare for instance a relative positioning.

ResetPosition corresponds to the following I²C command frame:

ResetPosition Command Frame									
Byte	Content	Structure							
		Bit 7	Bit 6	Bit 5	Bit 4	Bit 3	Bit 2	Bit 1	Bit 0
0	Address	1	1	OTP3	OTP2	OTP1	OTP0	HW	0
1	Command	1	0	0	0	0	1	1	0

16.3.7. ResetToDefault

This command is provided to the circuit by the I²C master in order to reset the whole slave node into the initial state. ResetToDefault will, for instance, overwrite the RAM with the reset state of the registers parameters (see Table 18). This is another way for the I²C master to initialize a slave node in case of emergency, or simply to refresh the RAM content.

Note: ActPos and TagPos are not modified by a ResetToDefault command.

Important: Care should be taken not to send a ResetToDefault command while a motion is ongoing, since this could modify the motion parameters in a way forbidden by the position controller.

ResetToDefault corresponds to the following I²C command frame:

ResetToDefault Command Frame									
Byte	Content	Structure							
		Bit 7	Bit 6	Bit 5	Bit 4	Bit 3	Bit 2	Bit 1	Bit 0
0	Address	**1**	**1**	**OTP3**	**OTP2**	**OTP1**	**OTP0**	**HW**	**0**
1	Command	**1**	**0**	**0**	**0**	**0**	**1**	**1**	**1**

16.3.8. RunVelocity

This command is provided to the circuit by the I²C master in order to put the motor in continuous motion state.

RunVelocity corresponds to the following I²C command frame:

RunVelocity Command Frame									
Byte	Content	Structure							
		Bit 7	Bit 6	Bit 5	Bit 4	Bit 3	Bit 2	Bit 1	Bit 0
0	Address	1	1	OTP3	OTP2	OTP1	OTP0	HW	0
1	Command	1	0	0	1	0	1	1	1

16.3.9. SetDualPosition

This command is provided to the circuit by the I²C master in order to perform a positioning of the motor using two different velocities. See Section Dual Positioning.

Note1: This sequence cannot be interrupted by another positioning command.

Important: If for some reason ActPos equals Pos1[15:0] at the moment the SetDualPosition command is issued, the circuit will enter in deadlock state. Therefore, the application should check the actual position by a GetFullStatus2 command prior to starting a dual positioning. Another solution may consist of programming a value out of the stepper motor range for Pos1[15:0]. For the same reason Pos2[15:0] should not be equal to Pos1[15:0].

SetDualPosition corresponds to the following I²C command frame:

SetDualPosition Command Frame									
Byte	Content	Structure							
		Bit 7	Bit 6	Bit 5	Bit 4	Bit 3	Bit 2	Bit 1	Bit 0
0	Address	**1**	**1**	**OTP3**	**OTP2**	**OTP1**	**OTP0**	**HW**	**0**
1	Command	**1**	**0**	**0**	**0**	**1**	**0**	**0**	**0**
2	Data 1	1	1	1	1	1	1	1	1
3	Data 2	1	1	1	1	1	1	1	1
4	Data 3	Vmax[3:0]				Vmin[3:0]			
5	Data 4	Pos1[15:8]							
6	Data 5	Pos1[7:0]							
7	Data 6	Pos2[15:8]							
8	Data 7	Pos2[7:0]							

Where:

`Vmax[3:0]` Max. velocity for first motion

`Vmin[3:0]` Min. velocity for first motion and velocity for the second motion

`Pos1[15:0]` First position to be reached during the first motion

`Pos2[15:0]` Relative position of the second motion

16.3.10. SetStallParam

This command sets the motion detection parameters and the related stepper motor parameters, such as the minimum and maximum velocity, the run- and hold current, acceleration and step-mode. See Motion Detection for the meaning of these parameters.

`SetStallParam` corresponds to the following I^{2}C command frame:

SetStallParam Command Frame									
Byte	Content	Structure							
		Bit 7	Bit 6	Bit 5	Bit 4	Bit 3	Bit 2	Bit 1	Bit 0
0	Address	**1**	**1**	**OTP3**	**OTP2**	**OTP1**	**OTP0**	**HW**	**0**
1	Command	**1**	**0**	**0**	**1**	**0**	**1**	**1**	**0**
2	Data 1	1	1	1	1	1	1	1	1
3	Data 2	1	1	1	1	1	1	1	1
4	Data 3	Irun[3:0]				Ihold[3:0]			
5	Data 4	Vmax[3:0]				Vmin[3:0]			
6	Data 5	MinSamples[2:0]			Shaft	Acc[3:0]			
7	Data 6	AbsThr[3:0]				DelThr[3:0]			
8	Data 7	FS2StallEn[2:0]			AccShape	StepMode[1:0]		DC100StEn	PWMJEn

16.3.11. SetMotorParam

This command is provided to the circuit by the I^{2}C master to set the values for the stepper motor parameters (listed below) in RAM. Refer to Table 18 to see the meaning of the parameters sent by the I^{2}C master.

Important: If a `SetMotorParam` occurs while a motion is ongoing, it will modify at once the motion parameters (see Position Controller). Therefore the application should not change parameters other than `Vmax` and `Vmin` while a motion is running, otherwise correct positioning cannot be guaranteed.

`SetMotorParam` corresponds to the following I^{2}C command frame:

SetMotorParam Command Frame									
Byte	Content	Structure							
		Bit 7	Bit 6	Bit 5	Bit 4	Bit 3	Bit 2	Bit 1	Bit 0
0	Address	**1**	**1**	**OTP3**	**OTP2**	**OTP1**	**OTP0**	**HW**	**0**
1	Command	**1**	**0**	**0**	**0**	**1**	**0**	**0**	**1**
2	Data 1	1	1	1	1	1	1	1	1
3	Data 2	1	1	1	1	1	1	1	1
4	Data 3	Irun[3:0]				Ihold[3:0]			
5	Data 4	Vmax[3:0]				Vmin[3:0]			
6	Data 5	SecPos[10:8]			Shaft	Acc[3:0]			
7	Data 6	SecPos[7:0]							
8	Data 7	1	PWMfreq	1	AccShape	StepMode[1:0]		1	PWMJEn

16.3.12. SetOTPParam

This command is provided to the circuit by the I²C master to program and zap the OTP data `D[7:0]` in OTP address `OTPA[2:0]`.

Important: This command must be sent under a specific Vbb voltage value. See parameter VbbOTP in Table 5. This is a mandatory condition to ensure reliable zapping.

`SetOTPParam` corresponds to the following I²C command frame:

SetOTPParam Command Frame									
Byte	Content	Structure							
		Bit 7	Bit 6	Bit 5	Bit 4	Bit 3	Bit 2	Bit 1	Bit 0
0	Address	**1**	**1**	**OTP3**	**OTP2**	**OTP1**	**OTP0**	**HW**	**0**
1	Command	**1**	**0**	**0**	**1**	**0**	**0**	**0**	**0**
2	Data 1	1	1	1	1	1	1	1	1
3	Data 2	1	1	1	1	1	1	1	1
4	Data 3	1	1	1	1	1	OTPA[2:0]		
5	Data 4	D[7:0]							

Where:
`OTPA[2:0]`: OTP address
`D[7:0]`: Corresponding OTP data

16.3.13. SetPosition

This command is provided to the circuit by the I²C master to drive the motor to a given absolute position. See Positioning for more details. The priority encoder table (see Priority Encoder) acknowledges the cases where a `SetPosition` command will be ignored.

`SetPosition` corresponds to the following I²C command frame:

SetPosition Command Frame									
Byte	Content	Structure							
		Bit 7	Bit 6	Bit 5	Bit 4	Bit 3	Bit 2	Bit 1	Bit 0
0	Address	1	1	OTP3	OTP2	OTP1	OTP0	HW	0
1	Command	1	0	0	0	1	0	1	1
2	Data 1	1	1	1	1	1	1	1	1
3	Data 2	1	1	1	1	1	1	1	1
4	Data 3	Pos[15:8]							
5	Data 4	Pos[7:0]							

Where:
`Pos [15:0]` Signed 16-bit position set-point for motor.

16.3.14. SoftStop

This command will be internally triggered when the chip temperature rises above the thermal shutdown threshold (see Table 5 and Section 14.2.5). It provokes an immediate deceleration to `Vmin` (see Minimum Velocity) followed by a stop, regardless of the position reached. Once the motor is stopped, `TagPos` register is overwritten with value in `ActPos` register to ensure keeping the stop position. The I²C Master for some safety reasons can also issue a SoftStop command.

`SoftStop` corresponds to the following I²C command frame:

SoftStop Command Frame									
Byte	Content	Structure							
		Bit 7	Bit 6	Bit 5	Bit 4	Bit 3	Bit 2	Bit 1	Bit 0
0	Address	**1**	**1**	**OTP3**	**OTP2**	**OTP1**	**OTP0**	**HW**	**0**
1	Command	**1**	**0**	**0**	**0**	**1**	**1**	**1**	**1**

16.3.15. TestBemf

This command is provided to the circuit by the I²C master in order to output the Bemf integrator output to the SWI output of the chip. Once activated, it can be stopped only after POR. During the Bemf observation, reading of the SWI state is internally forbidden.

`TestBemf` corresponds to the following I^2C command frame:

TestBemf Command Frame									
Byte	Content	Structure							
		Bit 7	Bit 6	Bit 5	Bit 4	Bit 3	Bit 2	Bit 1	Bit 0
0	Address	1	1	OTP3	OTP2	OTP1	OTP0	HW	0
1	Command	1	0	0	1	1	1	1	1

17.0 Resistance to Electrical and Electromagnetic Disturbances

17.1 Electrostatic Discharges

Table 31: Absolute Maximum Ratings

Parameter		Min.	Max.	Unit
Vesd (1)	Electrostatic discharge voltage on all pins	-2	+2	kV

Notes:
(1) Human body model (100pF via 1.5 kΩ, according to JEDEC EIA-JESD22-A114-B.)

17.2 Electrical Transient Conduction Along Supply Lines

Test pulses are applied to the power supply wires of the equipment implementing the AMIS-30624 (see application schematic), according to ISO 7637-1 document. Operating Classes are defined in ISO 7637-2.

Table 32: Test Pulses and Test Levels According to ISO 7637-1

Pulse	Amplitude	Rise Time	Pulse Duration	Rs	Operating Class
#1	-100V	≤ 1µs	2ms	10Ω	C
#2a	+100V	≤ 1µs	50µs	2Ω	B
#3a	-150V (from +13.5V)	5ns	100ns (burst)	50Ω	A
#3b	+100V (from +13.5V)	5ns	100ns (burst)	50Ω	A
#5b (load dump)	+21.5V (from +13.5V)	≤ 10ms	400ms	≤ 1Ω	C

17.3 EMC

Bulk current injection (BCI), according to ISO 11452-4. Operating Classes are defined in ISO 7637-2.

Table 33: Bulk Current Injection Operating Classes

Current	Operating Class
60mA envelope	A
100mA envelope	B
200mA envelope	C

17.4 Power Supply Micro-interruptions

According to ISO 16750-2

Table 34: Immunity to Power Supply Micro-interruptions

Test	Operating Class
10µs micro-interruptions	A
100µs micro-interruptions	B
5ms micro-interruptions	B
50ms micro-interruptions	C
300ms micro-interruptions	C

18.0 Package Outline

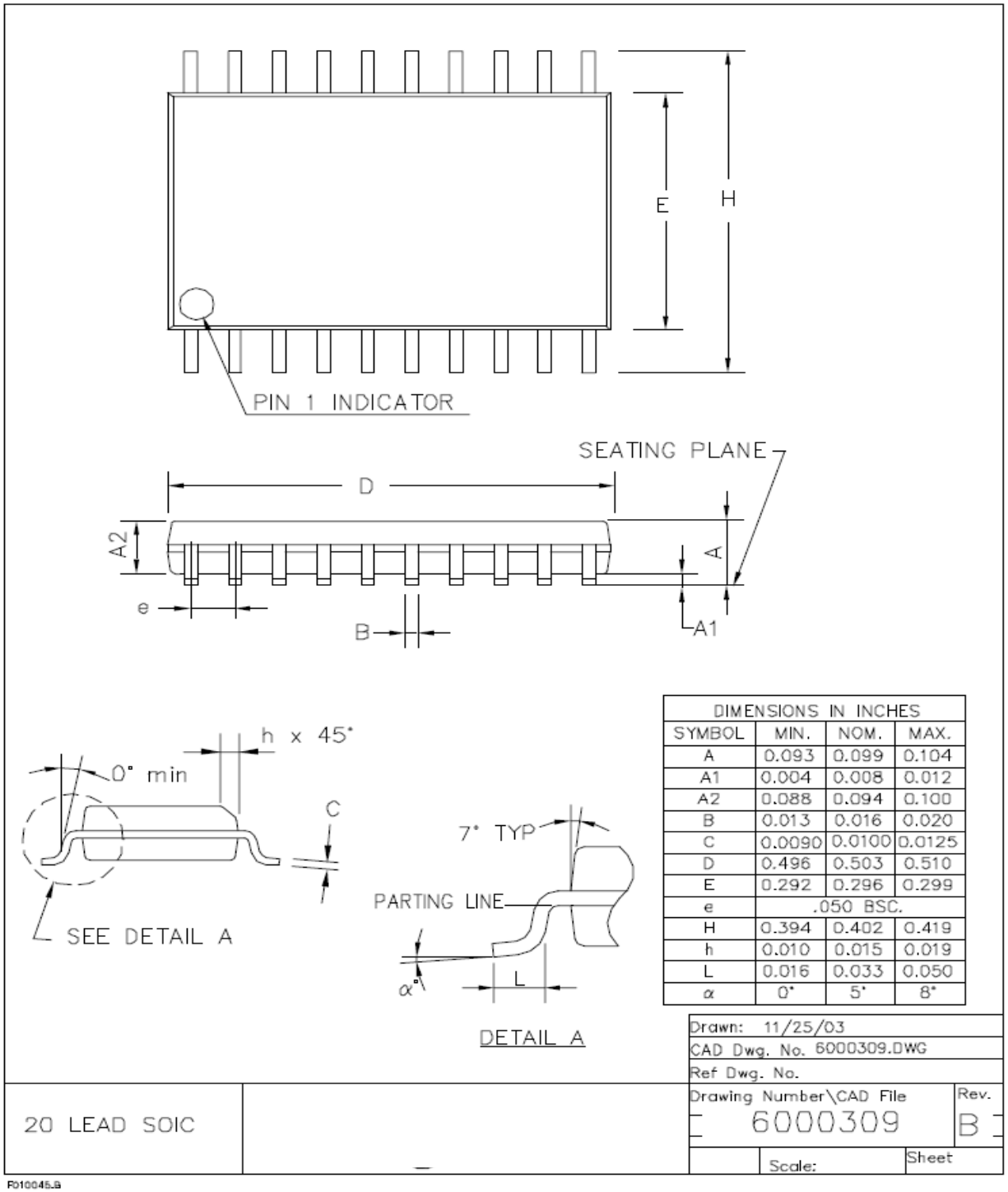

Figure 36: SOIC-20: Plastic Small Outline; 20 leads; Body Width 300mil. AMIS reference: SOIC300 20 300G

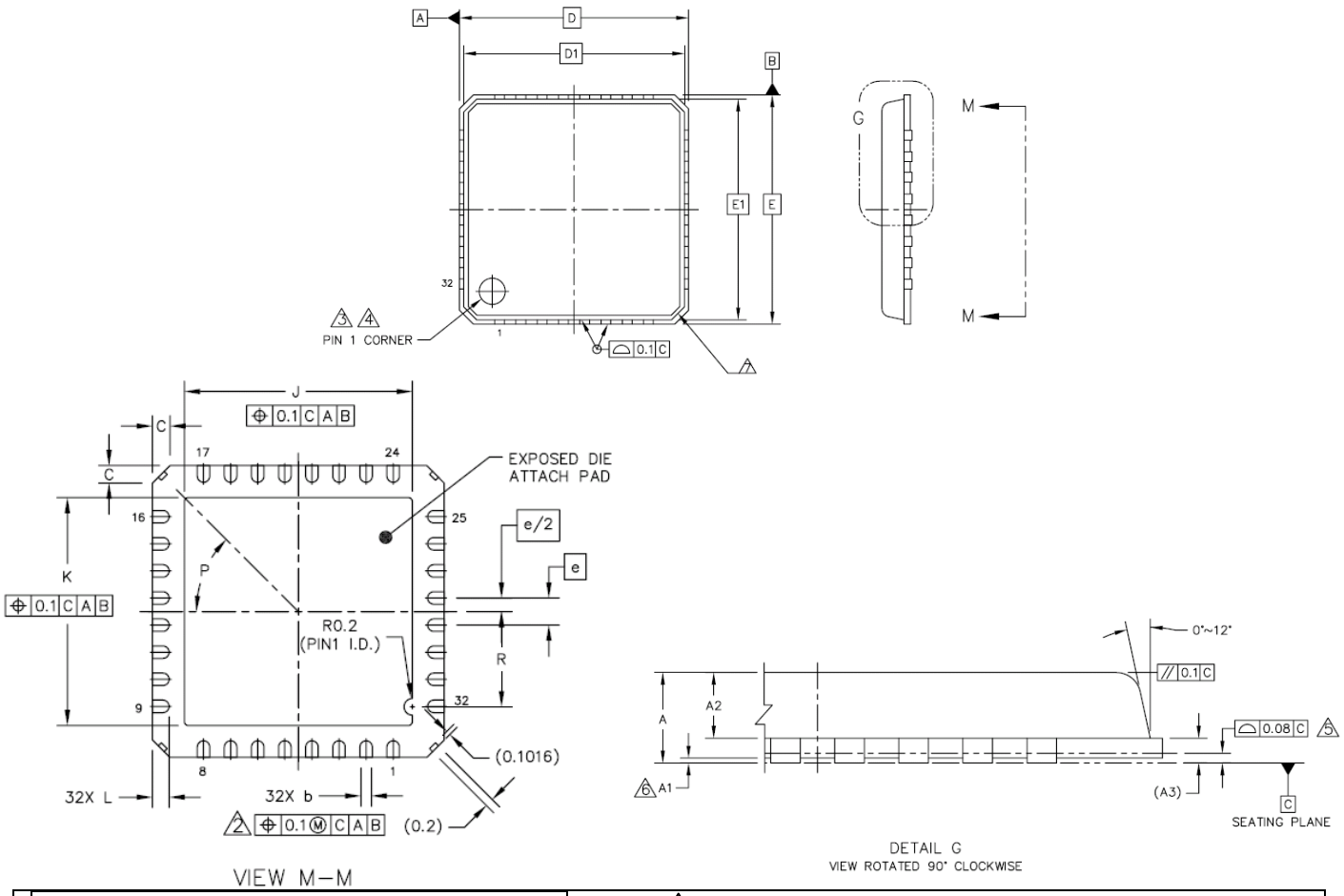

Dimensions:

Dim	Min	Nom	Max	Unit
A	0.8		0.9	mm
A1	0	0.02	0.05	mm
A2	0.576	0.615	0.654	mm
A3		0.203		mm
b	0.25	0.3	0.35	mm
C	0.24	0.42	0.6	mm
D		7		mm
D1		6.75		mm
E		7		mm
E1		6.75		mm
e		0.65		mm
J	5.37	5.47	5.57	mm
K	5.37	5.47	5.57	mm
L	0.35	0.4	0.45	mm
P		45		Degree
R	2.185		2.385	mm

Notes

2) Dimensions apply to plated terminal and are measured between 0.2 and 0.25 mm from terminal tip.

3) The pin #1 indication must be placed on the top surface of the package by using indentation mark or other feature of package body.

4) Exact shape and size of this feature is optional

5) Applied for exposed pad and terminals. Exclude embedding part of exposed pad from measuring.

6) Applied only to terminals

7) Exact shape of each corner is optional

7x7 NQFP

Figure 37: NQFP-32: No lead Quad Flat Pack; 32 pins; body size 7 x 7 mm. AMIS reference: NQFP-32

19.0 Soldering

19.1 Introduction to Soldering Surface Mount Packages

This text gives a very brief insight to a complex technology. A more in-depth account of soldering ICs can be found in the ON Semiconductor “Data Handbook IC26; Integrated Circuit Packages” (document order number 9398 652 90011). There is no soldering method that is ideal for all surface mount IC packages. Wave soldering is not always suitable for surface mount ICs, or for printed-circuit boards with high population densities. In these situations re-flow soldering is often used.

19.2 Re-flow Soldering

Re-flow soldering requires solder paste (a suspension of fine solder particles, flux and binding agent) to be applied to the PCB by screen printing, stencilling or pressure-syringe dispensing before package placement. Several methods exist for reflowing; for example, infrared/convection heating in a conveyor type oven.

Throughput times (preheating, soldering and cooling) vary between 100 and 200 seconds depending on the heating method. Typical re-flow peak temperatures range from 215 to 260°C. The top-surface temperature of the packages should preferably be kept below 230°C.

19.3 Wave Soldering

Conventional single wave soldering is not recommended for surface mount devices (SMDs) or PCBs with a high component density, as solder bridging and non-wetting can present major problems. To overcome these problems, the double-wave soldering method was specifically developed.
If wave soldering is used the following conditions must be observed for optimal results:

- Use a double-wave soldering method comprising a turbulent wave with high upward pressure followed by a smooth laminar wave.
- For packages with leads on two sides and a pitch (e):
  - Larger than or equal to 1.27mm, the footprint longitudinal axis is preferred to be parallel to the transport direction of the PCB;
  - Smaller than 1.27mm, the footprint longitudinal axis must be parallel to the transport direction of the PCB. The footprint must incorporate solder thieves at the downstream end.
- For packages with leads on four sides, the footprint must be placed at a 45º angle to the transport direction of the PCB. The footprint must incorporate solder thieves downstream and at the side corners.

During placement and before soldering, the package must be fixed with a droplet of adhesive. The adhesive can be applied by screen printing, pin transfer or syringe dispensing. The package can be soldered after the adhesive is cured. Typical dwell time is four seconds at 250°C. A mildly-activated flux will eliminate the need for removal of corrosive residues in most applications.

19.4 Manual Soldering

Fix the component by first soldering two diagonally-opposite end leads. Use a low voltage (24V or less) soldering iron applied to the flat part of the lead. Contact time must be limited to 10 seconds at up to 300°C.

When using a dedicated tool, all other leads can be soldered in one operation within two to five seconds between 270 and 320°C.

Table 35: Soldering Process

Package	Soldering Method	
	Wave	Re-flow(1)
BGA, SQFP	Not suitable	Suitable
HLQFP, HSQFP, HSOP, HTSSOP, SMS	Not suitable(2)	Suitable
PLCC (3) , SO, SOJ	Suitable	Suitable
LQFP, QFP, TQFP	Not recommended(3)(4)	Suitable
SSOP, TSSOP, VSO	Not recommended(5)	Suitable

Notes:
(1) All surface mount (SMD) packages are moisture sensitive. Depending upon the moisture content, the maximum temperature (with respect to time) and body size of the package, there is a risk that internal or external package cracks may occur due to vaporization of the moisture in them (the so called popcorn effect). For details, refer to the drypack information in the “Data Handbook IC26; Integrated Circuit Packages; Section: Packing Methods.”
(2) These packages are not suitable for wave soldering as a solder joint between the printed-circuit board and heatsink (at bottom version) can not be achieved, and as solder may stick to the heatsink (on top version).
(3) If wave soldering is considered, then the package must be placed at a 45° angle to the solder wave direction. The package footprint must incorporate solder thieves downstream and at the side corners.
(4) Wave soldering is only suitable for LQFP, TQFP and QFP packages with a pitch (e) equal to or larger than 0.8mm; it is definitely not suitable for packages with a pitch (e) equal to or smaller than 0.65mm.
(5) Wave soldering is only suitable for SSOP and TSSOP packages with a pitch (e) equal to or larger than 0.65mm; it is definitely not suitable for packages with a pitch (e) equal to or smaller than 0.5mm.

20.0 Revision History

Revision	Date	Modifications
1.0	July 16, 2002	First non-preliminary issue
2.1	December 5th , 2005	Complete review
3.0	February 21, 2007	Public release
3.1	March 23, 2007	Updatel^{2}C commands, adding links
4.0	June 17, 2008	Move content into ON Semiconductor template; update OPN table

21.0 Company or Product Inquiries

For more information about ON Semiconductor's products or services visit our Web site at http://www.amis.com.

ON Semiconductor and are registered trademarks of Semiconductor Components Industries, LLC (SCILLC). SCILLC reserves the right to make changes without further notice to any products herein. SCILLC makes no warranty, representation or guarantee regarding the suitability of its products for any particular purpose, nor does SCILLC assume any liability arising out of the application or use of any product or circuit, and specifically disclaims any and all liability, including without limitation special, consequential or incidental damages. "Typical" parameters which may be provided in SCILLC data sheets and/or specifications can and do vary in different applications and actual performance may vary over time. All operating parameters, including "Typicals" must be validated for each customer application by customer's technical experts. SCILLC does not convey any license under its patent rights nor the rights of others. SCILLC products are not designed, intended, or authorized for use as components in systems intended for surgical implant into the body, or other applications intended to support or sustain life, or for any other application in which the failure of the SCILLC product could create a situation where personal injury or death may occur. Should Buyer purchase or use SCILLC products for any such unintended or unauthorized application, Buyer shall indemnify and hold SCILLC and its officers, employees, subsidiaries, affiliates, and distributors harmless against all claims, costs, damages, and expenses, and reasonable attorney fees arising out of, directly or indirectly, any claim of personal injury or death associated with such unintended or unauthorized use, even if such claim alleges that SCILLC was negligent regarding the design or manufacture of the part. SCILLC is an Equal Opportunity/Affirmative Action Employer. This literature is subject to all applicable copyright laws and is not for resale in any manner.

PUBLICATION ORDERING INFORMATION

LITERATURE FULFILLMENT:
Literature Distribution Center for ON Semiconductor
P.O. Box 5163, Denver, Colorado 80217 USA
Phone: 303-675-2175 or 800-344-3860 Toll Free USA/Canada
Fax: 303-675-2176 or 800-344-3867 Toll Free USA/Canada
Email: orderlit@onsemi.com

N. American Technical Support: 800-282-9855
Toll Free USA/Canada
Europe, Middle East and Africa Technical Support:
Phone: 421 33 790 2910
Japan Customer Focus Center
Phone: 81-3-5773-3850

ON Semiconductor Website: www.onsemi.com

Order Literature: http://www.onsemi.com/orderlit

For additional information, please contact your local Sales Representative