AME, Inc.

AME8821

250mA Hi-PSRR, Low-Quiescent LDO with In-Rush Current Control For USB Application

■ General Description

The AME8821 family of positive, linear regulators feature low quiescent current (17μA typ.) with low dropout voltage, making them ideal for battery applications. The space-saving SOT-25/TSOT-25 packages are attractive for "Pocket" and "Hand Held"applications.

These rugged devices have both Thermal Shutdown, and Current Limitation to prevent device failure under the "Worst" operating conditions. In application requires a low noise regulated supply. The AME8821 family uses the SR pin to program the output voltage's slew rate to control the in-rush current. This is specifically used in the USB application where large load capacitance is present at start-up.

The AME8821 also features a logic-enabled sleep mode to shutdown the regulator, reducing quiescent current to 1μA typical at T_A= 25°C.

The AME8821 is stable with an output capacitance of 4.7μF or larger.

■ Features

- Guaranteed 250mA Output
- 17μA Quiescent Current
- Over-Temperature Shutdown
- Over-Current Limitation
- Noise Reduction SR Capacitor
- Power-Saving Shutdown Mode
- Space-Saving SOT-25/TSOT-25 Packages
- Factory Pre-set Output Voltages
- Enable pin option
  - ENB active low enable
  - EN active high enable
- All AME's Lead Free Products Meet RoHS Standards

■ Applications

- Instrumentation
- Portable Electronics
- Wireless Devices
- Cordless Phones
- PC Peripherals
- Battery Powered Widgets

■ Function Block Diagram

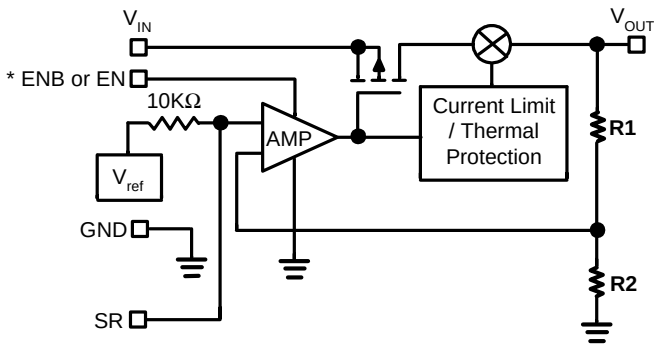

* AME8821A: ENB, AME8821B: EN

■ Typical Application

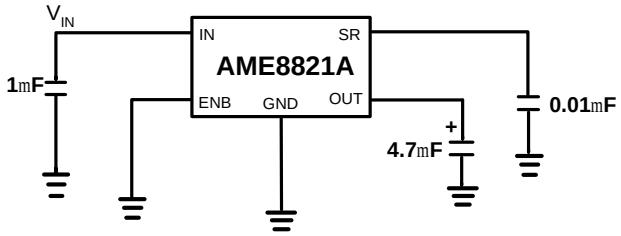

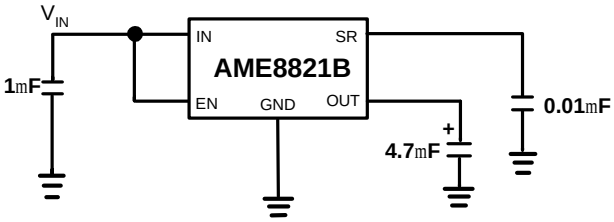

■ Pin Configuration

SOT-25/TSOT-25
Top View

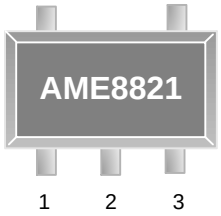

AME8821AEEV

1. IN
2. GND
3. ENB
4. SR
5. OUT

*** Die Attach:**
Conductive Epoxy

SOT-25/TSOT-25
Top View

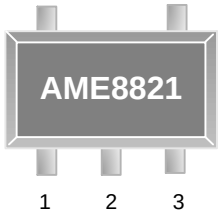

AME8821BEEV

1. IN
2. GND
3. EN
4. SR
5. OUT

*** Die Attach:**
Conductive Epoxy

■ Pin Description

Pin Number	Pin Name	Pin Description
1	IN	Input voltage pin. It should be decoupled with 1μF or greater capacitor.
2	GND	Ground connection pin.
3	EN	Enable pin. When pulled low, the PMOS pass transistor turns off, current consuming less than 1μA.
	ENB	Enable bar pin. When pulled high, the PMOS pass transistor turns off, current consuming less than 1μA.
4	SR	The SR(Slew Rate) terminal is used to control the V_{OUT} in-rush current.
5	OUT	LDO voltage regulator output pin. It should be decoupled with a 4.7μF or greater value low ESR ceramic capacitor.

■ Ordering Information

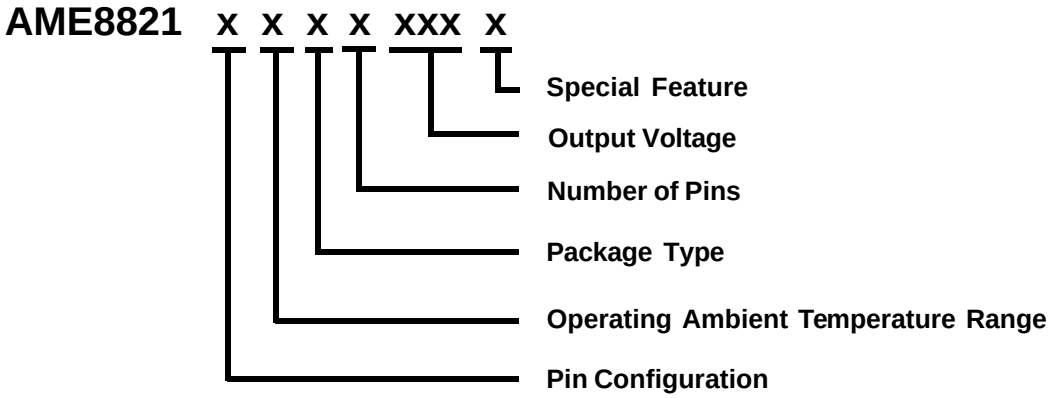

Pin Configuration	Operating Ambient Temperature Range	Package Type	Number of Pins	Output Voltage	Special Feature
A: 1. IN (SOT-25) 2. GND (TSOT-25) 3. ENB 4. SR 5. OUT B: 1. IN (SOT-25) 2. GND (TSOT-25) 3. EN 4. SR 5. OUT	E: -40°C to 85°C	E: SOT-2X	V: 5	180: V=1.8V 250: V=2.5V 285: V=2.85V 300: V=3.0V 330: V=3.3V	Y: Lead free & Low profile Z: Lead free

■ Ordering Information

Part Number	Marking*	Output Voltage	Package	Operating Ambient Temperature Range
AME8821AEEV180Z	BHXww	1.8V	SOT-25	- 40°C to 85°C
AME8821AEEV180Y	BHXww	1.8V	TSOT-25	- 40°C to 85°C
AME8821AEEV250Z	BHYww	2.5V	SOT-25	- 40°C to 85°C
AME8821AEEV250Y	BHYww	2.5V	TSOT-25	- 40°C to 85°C
AME8821AEEV285Z	BHZww	2.85V	SOT-25	- 40°C to 85°C
AME8821AEEV285Y	BHZww	2.85V	TSOT-25	- 40°C to 85°C
AME8821AEEV300Z	BIAww	3.0V	SOT-25	- 40°C to 85°C
AME8821AEEV300Y	BIAww	3.0V	TSOT-25	- 40°C to 85°C
AME8821AEEV330Z	BIBww	3.3V	SOT-25	- 40°C to 85°C
AME8821AEEV330Y	BIBww	3.3V	TSOT-25	- 40°C to 85°C
AME8821BEEV180Z	BICww	1.8V	SOT-25	- 40°C to 85°C
AME8821BEEV180Y	BICww	1.8V	TSOT-25	- 40°C to 85°C
AME8821BEEV250Z	BIDww	2.5V	SOT-25	- 40°C to 85°C
AME8821BEEV250Y	BIDww	2.5V	TSOT-25	- 40°C to 85°C
AME8821BEEV285Z	BIEww	2.85V	SOT-25	- 40°C to 85°C
AME8821BEEV285Y	BIEww	2.85V	TSOT-25	- 40°C to 85°C
AME8821BEEV300Z	BIFww	3.0V	SOT-25	- 40°C to 85°C
AME8821BEEV300Y	BIFww	3.0V	TSOT-25	- 40°C to 85°C
AME8821BEEV330Z	BIGww	3.3V	SOT-25	- 40°C to 85°C
AME8821BEEV330Y	BIGww	3.3V	TSOT-25	- 40°C to 85°C

Note: ww represents the date code and pls refer to the Date Code Rule before Package Dimension.

* A line on top of the first character represents lead free plating such as $\overline{B}$HXww.

Please consult AME sales office or authorized Rep./Distributor for output voltage and package type availability.

■ Absolute Maximum Ratings

Parameter	Maximum	Unit
Input Voltage	6	V
Output Current	P_D / (V_{IN} - V_{OUT})	mA
Output Voltage	GND-0.3 to V_{IN}+0.3	V
ESD Classification	C*	

Caution: Stress above the listed absolute maximum rating may cause permanent damage to the device
* HBM C: 4000V+

■ Recommended Operating Conditions

Parameter	Symbol	Rating	Unit
Ambient Temperature Range	T_A	- 40 to 85	°C
Junction Temperature Range	T_J	- 40 to 125	
Storage Temperature Range	T_{STG}	-65 to 150	

■ Thermal Information

Parameter	Package	Die Attach	Symbol	Maximum	Unit
Thermal Resistance* (Junction to Case)	SOT-25 TSOT-25	Conductive Epoxy	θ_{JC}	81	°C / W
Thermal Resistance (Junction to Ambient)			θ_{JA}	260	
Internal Power Dissipation			P_D	400	mW
Solder Iron (10 Sec)**				350	°C

* Measure θ_{JC} on center of molding compound if IC has no tab.
** MIL-STD-202G 210F

■ Electrical Specifications

Over operating temperature range(T_J = -40°C to 125°C), $V_{IN} = V_{OUT(nom)} + 1V$, or $V_{IN} = V_{IN(min)}$ whichever is greater, I_{OUT} = 1mA, $V_{EN} = V_{IN}$(V_{ENB} = 0), and C_{OUT} = 4.7µF, C_{IN} = 1µF unless otherwise noted. Typical values are at T_A = 25°C.

Parameter	Symbol	Test Condition		Min	Typ	Max	Units
Input Voltage	V_{IN}			Note1		5.5	V
Output Voltage Accuracy	$V_{OUT(nom)}$	T_A = 25°C		-1.5		1.5	%
		T_J = -40°C to 125°C		-3		3	
Output Voltage Line Regulation $\frac{DV_{OUT} \times DV_{IN}}{V_{OUT}} \times 100\%$	REG_{LINE}	V_{OUT} = 1.8V, 2.5V < V_{IN} < 5.5V	T_A = 25°C	-0.30	0.2	0.3	%/V
			T_J = -40°C to 125°C	-0.40		0.4	
		V_{OUT} = 2.5V, 3V < V_{IN} < 5.5V	T_A = 25°C	-0.25	0.15	0.25	
			T_J = -40°C to 125°C	-0.35		0.35	
		V_{OUT} = 2.85V, 3.3V < V_{IN} < 5.5V	T_A = 25°C	-0.25	0.15	0.25	
			T_J = -40°C to 125°C	-0.35		0.35	
		V_{OUT} = 3.0V, 3.5V < V_{IN} < 5.5V	T_A = 25°C	-0.25	0.15	0.25	
			T_J = -40°C to 125°C	-0.35		0.35	
		V_{OUT} = 3.3V, 3.8V < V_{IN} < 5.5V	T_A = 25°C	-0.2	0.1	0.2	
			T_J = -40°C to 125°C	-0.3		0.3	
Output Current	I_{OUT}	(See Note2)		250			mA
Output Current Limit	I_{LIM}	V_{OUT} = 0V, T_A = 25°C		300	350	750	mA
Quiescent Current	I_Q	10µA < I_{OUT} < 250mA	T_A = 25°C		17	25	µA
		10µA < I_{OUT} < 250mA	T_J = -40°C to 125°C			30	
Output Voltage Load Regulation $\frac{\frac{DV_{OUT}}{V_{OUT}} \times 100\%}{DI_{OUT}}$	REG_{LOAD}	1mA <= I_{OUT} <= 250mA	T_A = 25°C	-0.1	0.0025	0.1	%/mA

Note1 : $V_{IN} = V_{OUT} + V_{DROP}$

Note2 : Continuous output current and operating junction temperature are limited by internal protection circuitry, but it is not recommended that the device operate under conditions beyond those specified in this table for extended periods of time.

■ Electrical Specifications (contd.)

Parameter	Symbol	Test Condition		Min	Typ	Max	Units
Dropout Voltage @ V_{OUT} = V_{OUT}(nom) - 2%V_{OUT}(nom)	V_{DROP}	$V_{OUT(nom)}$ = 1.8V, I_{OUT} = 250mA	T_A = 25°C		1000	1100	mV
			T_J = -40°C to 125°C			1200	
		$V_{OUT(nom)}$ = 2.5V, I_{OUT} = 250mA	T_A = 25°C		500	600	
			T_J = -40°C to 125°C			650	
		$V_{OUT(nom)}$ = 2.85V, I_{OUT} = 250mA	T_A = 25°C		400	550	
			T_J = -40°C to 125°C			600	
		$V_{OUT(nom)}$ = 3V, I_{OUT} = 250mA	T_A = 25°C		400	550	
			T_J = -40°C to 125°C			600	
		$V_{OUT(nom)}$ = 3.3V, I_{OUT} = 250mA	T_A = 25°C		400	550	
			T_J = -40°C to 125°C			600	
Thermal Shutdown Temerature	T_{SHDN}	Thermal shutdown increasing			150		°C
Temerature Hysterisis	T_{HYS}				20		
Output Voltage Temperature Coefficient	T_C				30		ppm
Power Supply Ripple Rejection	PSRR	V_{OUT} = 3.3V, f = 1KHz, I_{OUT} = 100mA, C_{OUT} = 4.7µF, $C_{(SR)}$ = 0.01µF	T_A = 25°C		65		dB
Output Voltage Noise	e_N	BW = 200Hz to 100KHz, I_{OUT} = 250mA, C_{OUT} = 4.7µF, $C_{(SR)}$ = 0.47µF	T_A = 25°C		100		μV_{RMS}
Enable Bar High (Shutdown)	$V_{ENB(HI)}$	V_{IN} = 2.5V to 5.5V		1.4		V_{IN}	V
Enable High (Enabled)	$V_{EN(HI)}$						
Enable Bar Low (Enabled)	$V_{ENB(LO)}$			0		0.3	
Enable Low (Shutdown)	$V_{EN(LO)}$						
Enable / Enable Bar Pin Current (Enabled)	I_{EN} / I_{ENB}	ENB = 0, EN = V_{IN}, V_{IN} = 2.5V to 5.5V			0.1	1	µA
Shutdown Current	I_{SHDN}	ENB = V_{IN}, EN = 0, V_{IN} = 2.5V to 5.5V			1	2	µA
Start up Time	T_{STR}	V_{OUT} = 3.3V, R_{LOAD} = 22Ω, C_{OUT} = 10µF	$C_{(SR)}$ = 0.01µF, T_A = 25°C		20		mS
			$C_{(SR)}$ = 0.1µF, T_A = 25°C		200		
			$C_{(SR)}$ = 0.22µF, T_A = 25°C		450		

■ Detail Description

The AME8821 family of CMOS regulators contain a PMOS pass transistor, voltage reference, error amplifier, over-current protection, and thermal shutdown function.

The P-channel pass transistor receives data from the error amplifier, over-current limit, and thermal protection circuits. During normal operation, the error amplifier compares the output voltage to a precision reference. Over-current and thermal shutdown circuits become active when the junction temperature exceeds 150°C, or the current exceeds about 350mA. During thermal shutdown, the output voltage remains low. Normal operation is restored when the junction temperature drops below 130°C.

The AME8821 switches from voltage mode to current mode when the load exceeds the rated output current. This prevents over-stress.

■ External Capacitors

The AME8821 is stable with an output capacitor to ground of 4.7μF or greater. Ceramic capacitors have the lower ESR, and will offer the best AC performance. Conversely, Aluminum Electrolytic capacitors exhibit the higher ESR, resulting in the poor AC response. Unfortunately, large value ceramic capacitors are comparatively expensive. One option is to parallel a 0.1μF ceramic capacitor with a 10μF Aluminum Electrolytic. The benefit is low ESR, high capacitance, and low overall cost.

A second capacitor is recommended between the input and ground to stabilize V_{IN}. The input capacitor should be at least 1μF to have a beneficial effect. All capacitors should be placed in close proximity to the pins. A "Quiet" ground termination is desirable. This can be achieved with a "Star" connection

■ Enable

The Enable pin is optional. EN for active high enable, ENB for active low enable. When disable the Enable Pin EN = 0, ENB = V_{IN}, the PMOS pass transistor shuts off, and all internal circuits are powered down. In this state, the standby current is less than 1μA.

Output Voltage vs Load Current

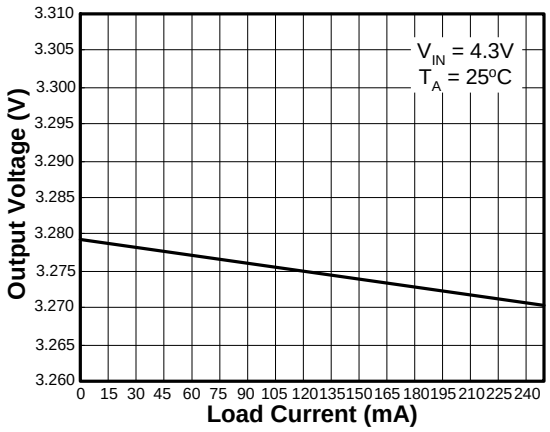

Quiescent Current vs Temperature

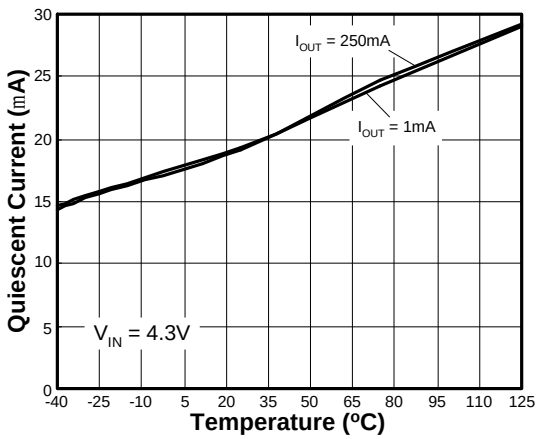

Dropout Voltage vs. Temperature

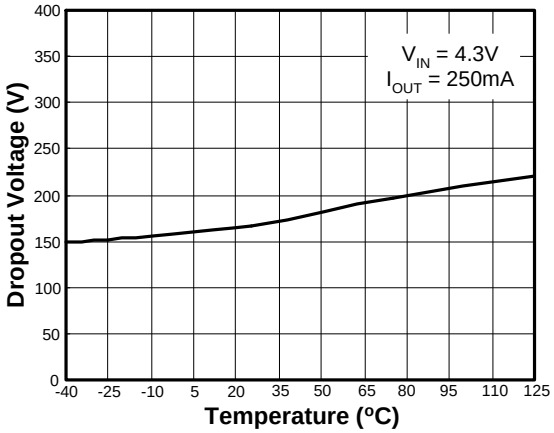

Output Spectral Noise Density vs. Frequency

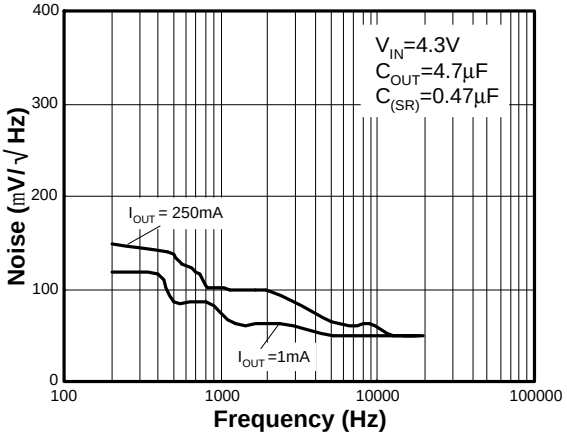

Output Impedance vs. Frequency

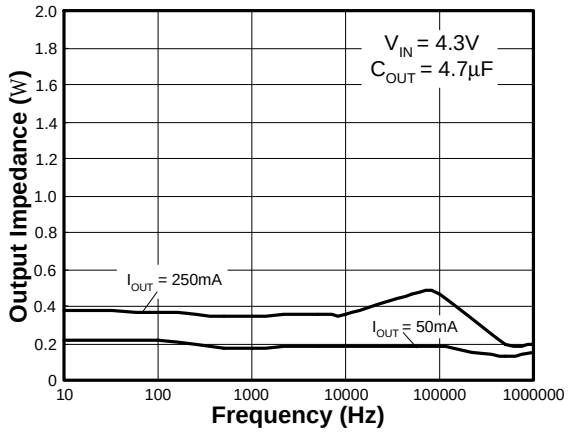

Power Supply Ripple Rejection Ratio

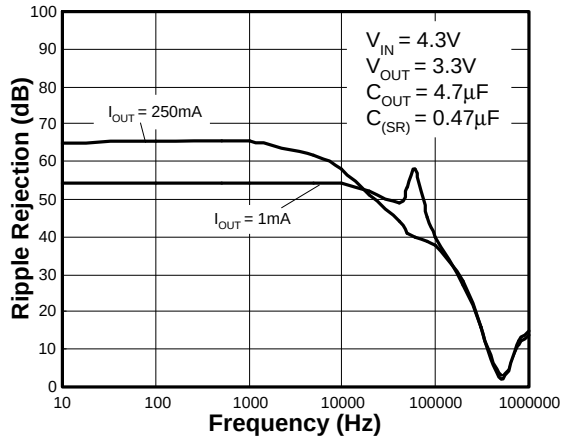

Line Transient Response

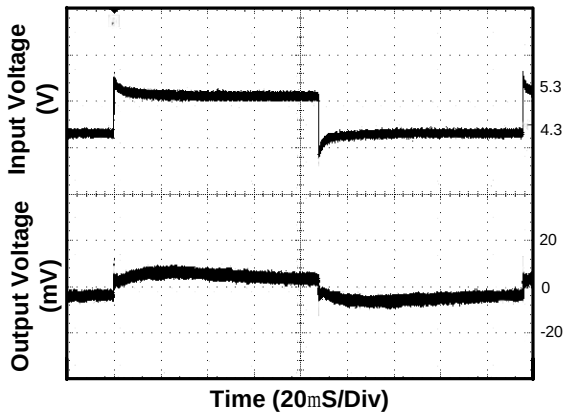

Load Transient Response

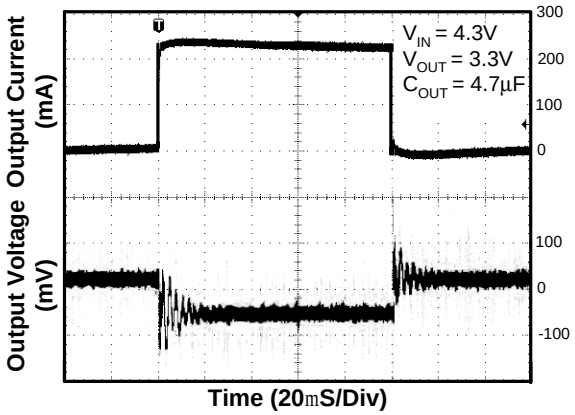

Output Voltage, Enable Voltage vs Time (Start-Up)

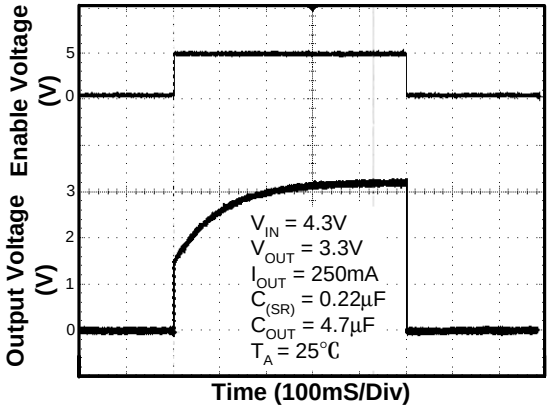

Output Voltage, Enable Voltage vs Time (Start-Up)

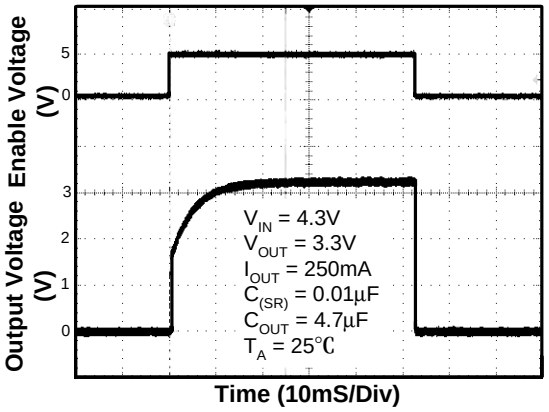

Output Voltage, Enable Voltage vs Time (Start-Up)

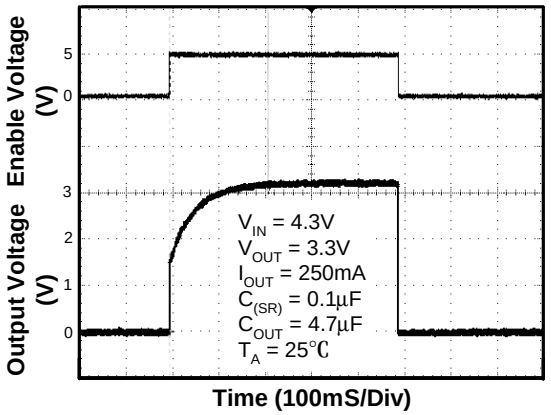

Output Voltage vs. Temperature

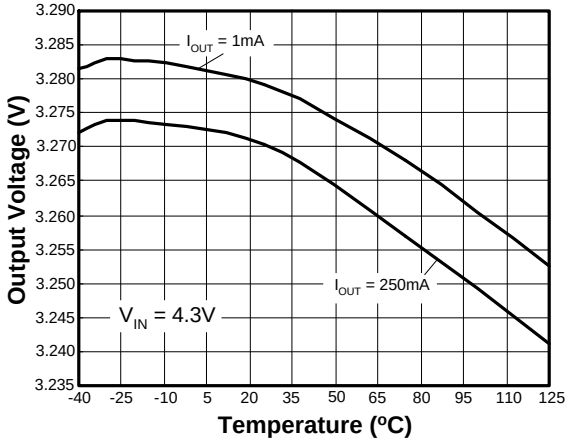

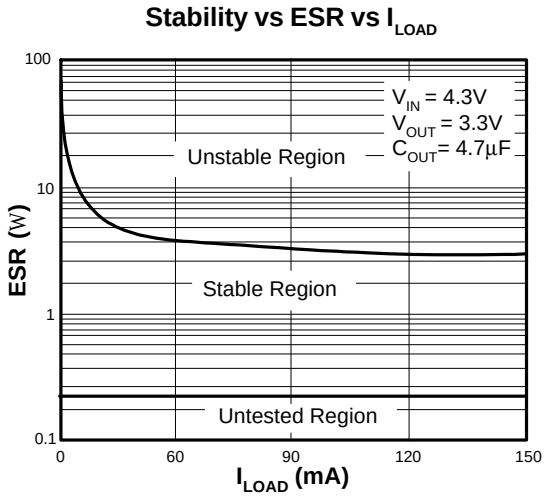
Stability vs ESR vs I LOAD
100
10
1
0.1
ESR (W)
0
60
90
120
150
I LOAD (mA)
V IN = 4.3V
V OUT = 3.3V
C OUT = 4.7µF
Unstable Region
Stable Region
Untested Region

■ Date Code Rule

Marking			Date Code		Year
A	A	A	W	W	xxx0
A	A	A	W	W	xxx1
A	A	A	W	W	xxx2
A	A	A	W	W	xxx3
A	A	A	W	W	xxx4
A	A	A	W	W	xxx5
A	A	A	W	W	xxx6
A	A	A	W	W	xxx7
A	A	A	W	W	xxx8
A	A	A	W	W	xxx9

■ Tape and Reel Dimension

SOT-25

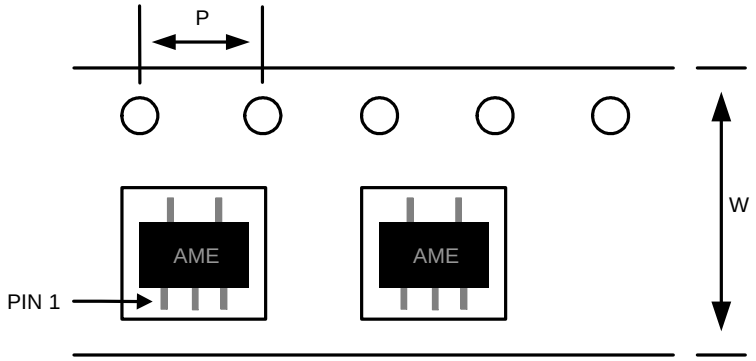

Carrier Tape, Number of Components Per Reel and Reel Size

Package	Carrier Width (W)	Pitch (P)	Part Per Full Reel	Reel Size
SOT-25	8.0±0.1 mm	4.0±0.1 mm	3000pcs	180±1 mm

■ Tape and Reel Dimension

TSOT-25

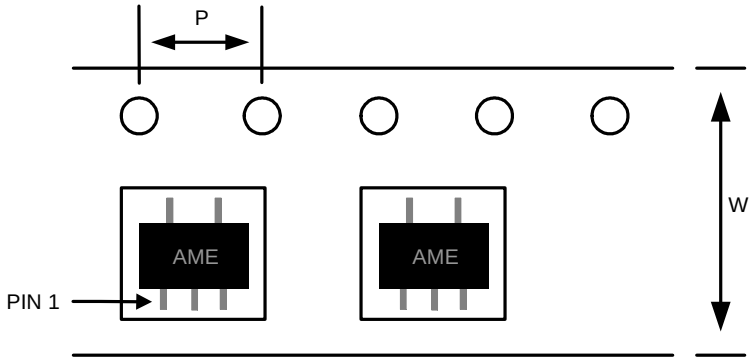

Carrier Tape, Number of Components Per Reel and Reel Size

Package	Carrier Width (W)	Pitch (P)	Part Per Full Reel	Reel Size
TSOT-25	8.0±0.1 mm	4.0±0.1 mm	3000pcs	180±1 mm

■ Package Dimension

SOT-25

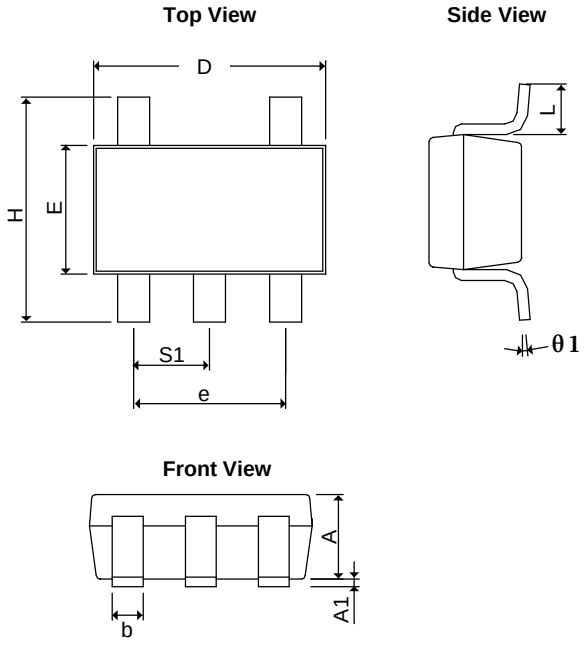

SYMBOLS	MILLIMETERS		INCHES	
	MIN	MAX	MIN	MAX
A	1.20REF		0.0472REF	
A_1	0.00	0.15	0.0000	0.0059
b	0.30	0.55	0.0118	0.0217
D	2.70	3.10	0.1063	0.1220
E	1.40	1.80	0.0551	0.0709
e	1.90 BSC		0.07480 BSC	
H	2.60	3.00	0.10236	0.11811
L	0.37BSC		0.0146BSC	
q1	0°	10°	0°	10°
S_1	0.95BSC		0.0374BSC	

TSOT-25

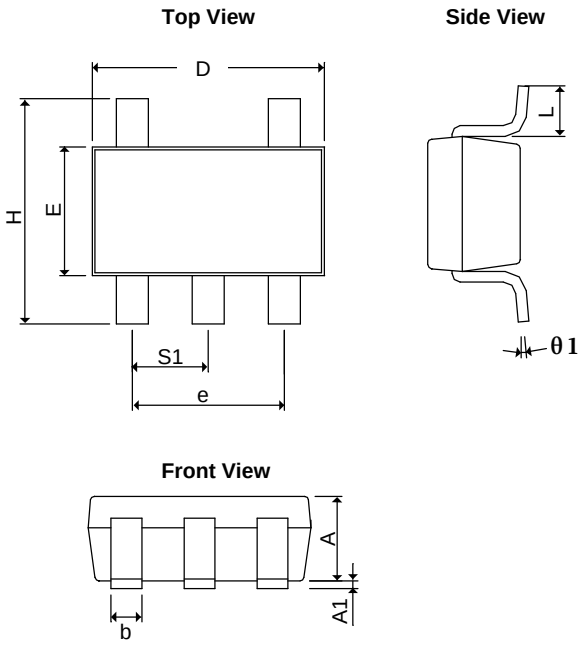

SYMBOLS	MILLIMETERS		INCHES	
	MIN	MAX	MIN	MAX
$A+A_1$	0.90	1.25	0.0354	0.0492
b	0.30	0.50	0.0118	0.0197
D	2.70	3.10	0.1063	0.1220
E	1.40	1.80	0.0551	0.0709
e	1.90 BSC		0.07480 BSC	
H	2.40	3.00	0.09449	0.11811
L	0.35BSC		0.0138BSC	
q1	0°	10°	0°	10°
S_1	0.95BSC		0.0374BSC	



www.ame.com.tw
E-Mail: sales@ame.com.tw

Life Support Policy:
These products of AME, Inc. are not authorized for use as critical components in life-support devices or systems, without the express written approval of the president of AME, Inc.
AME, Inc. reserves the right to make changes in the circuitry and specifications of its devices and advises its customers to obtain the latest version of relevant information.
© AME, Inc. , July 2007
Document: 1009-DS8821-A.01

Corporate Headquarter
AME, Inc.
2F, 302 Rui-Guang Road, Nei-Hu District
Taipei 114, Taiwan.
Tel: 886 2 2627-8687
Fax: 886 2 2659-2989

U.S.A.(Subsidiary)
Analog Microelectronics, Inc.
3100 De La Cruz Blvd., Suite 201
Santa Clara, CA. 95054-2438
Tel : (408) 988-2388
Fax: (408) 988-2489