AME8808 **750mA CMOS LDO**

■ General Description

The AME8808 family of positive, linear regulators feature low quiescent current (30µA typ.) with low dropout voltage, making them ideal for battery applications. The space-saving SOT-223 and DPAK-2 packages are attractive for "Pocket" and "Hand Held" applications.

These rugged devices have both Thermal Shutdown, and Current Fold-back to prevent device failure under the "Worst" of operating conditions.

The AME8808 is stable with an output capacitance of 2.2µF or greater.

■ Features

- Very Low Dropout Voltage
- Guaranteed 750mA Output
- Accurate to within 1.5%
- 30µA Quiescent Current
- Over-Temperature Shutdown
- Current Limiting
- Short Circuit Current Fold-back
- Space-Saving SOT-223 and DPAK-2 Package
- Factory Pre-set Output Voltages
- Low Temperature Coefficient

■ Applications

- Instrumentation
- Portable Electronics
- Wireless Devices
- Cordless Phones
- PC Peripherals
- Battery Powered Widgets
- Electronic Scales

■ Functional Block Diagram

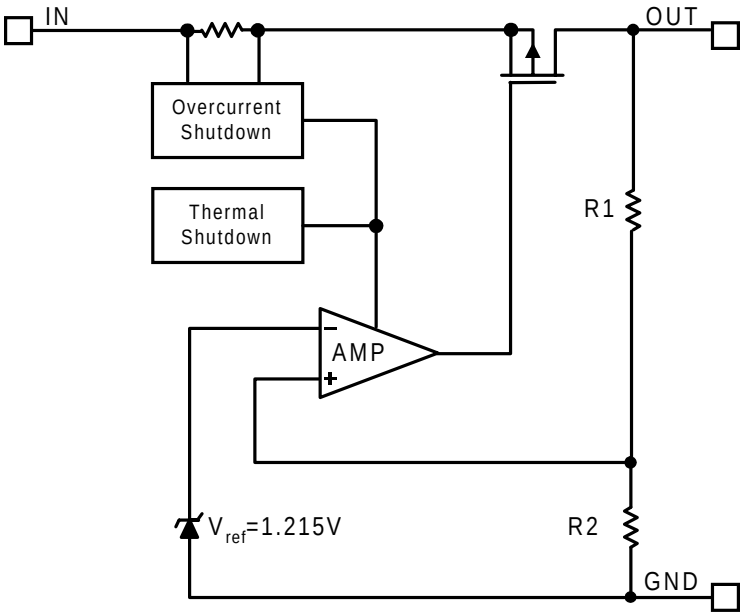

■ Typical Application

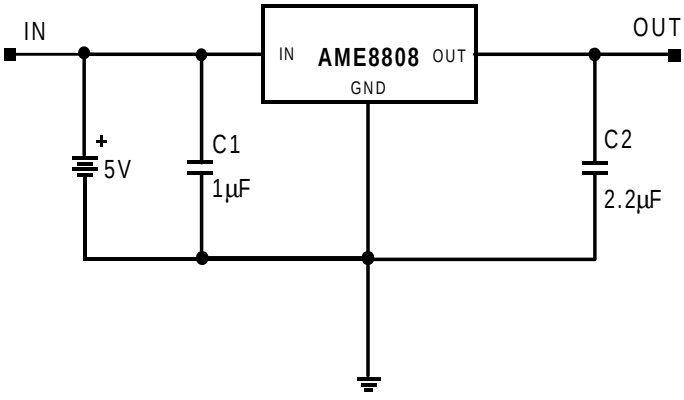

■ Pin Configuration

SOT-223 Top View

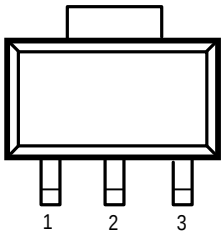

1. GND
2. V_{OUT}
3. V_{IN}

DPAK-2 Top View

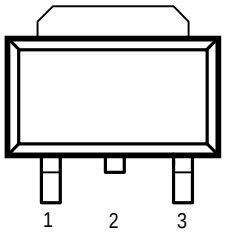

1. GND
2. V_{OUT} (Connected with heat sink)
3. V_{IN}

■ Ordering Information

Part Number	Marking	Output Voltage	Package	Operating Temp. Range
AME8808AEGT	AETyww	3.3V	SOT-223	-40°C to +85°C
AME8808BEGT	AEUyww	3.0V	SOT-223	-40°C to +85°C
AME8808CEGT	AEVyww	2.8V	SOT-223	-40°C to +85°C
AME8808DEGT	AEWyww	2.5V	SOT-223	-40°C to +85°C
AME8808EEGT	AEXyww	3.8V	SOT-223	-40°C to +85°C
AME8808FEGT	AEYyww	3.6V	SOT-223	-40°C to +85°C
AME8808GEGT	AEZyww	3.5V	SOT-223	-40°C to +85°C
AME8808HEGT	AFAyww	2.7V	SOT-223	-40°C to +85°C
AME8808IEGT	AFByww	3.4V	SOT-223	-40°C to +85°C
AME8808JEGT	AGUyww	2.85V	SOT-223	-40°C to +85°C
AME8808KEGT	AHWyww	3.7V	SOT-223	-40°C to +85°C
AME8808LEGT	AJGyww	1.5V	SOT-223	-40°C to +85°C
AME8808MEGT	AJHyww	1.8V	SOT-223	-40°C to +85°C
AME8808NEGT	AKUyww	2.9V	SOT-223	-40°C to +85°C
AME8808OEGT	AKVyww	3.1V	SOT-223	-40°C to +85°C

Please consult AME sales office or authorized Rep./Distributor for other output voltage and package type availability.

■ Ordering Information (contd.)

Part Number	Marking	Output Voltage	Package	Operating Temp. Range
AME8808AECS	AME8808 AECS yyww	3.3V	DPAK-2	-40°C to +85°C
AME8808BECS	AME8808 BECS yyww	3.0V	DPAK-2	-40°C to +85°C
AME8808CECS	AME8808 CECS yyww	2.8V	DPAK-2	-40°C to +85°C
AME8808DECS	AME8808 DECS yyww	2.5V	DPAK-2	-40°C to +85°C
AME8808EECS	AME8808 EECS yyww	3.8V	DPAK-2	-40°C to +85°C
AME8808FECS	AME8808 FECS yyww	3.6V	DPAK-2	-40°C to +85°C
AME8808GECS	AME8808 GECS yyww	3.5V	DPAK-2	-40°C to +85°C
AME8808HECS	AME8808 HECS yyww	2.7V	DPAK-2	-40°C to +85°C
AME8808IECS	AME8808 IECS yyww	3.4V	DPAK-2	-40°C to +85°C
AME8808JECS	AME8808 JECS yyww	2.85V	DPAK-2	-40°C to +85°C
AME8808KECS	AME8808 KECS yyww	3.7V	DPAK-2	-40°C to +85°C
AME8808LECS	AME8808 LECS yyww	1.5V	DPAK-2	-40°C to +85°C
AME8808MECS	AME8808 MECS yyww	1.8V	DPAK-2	-40°C to +85°C
AME8808NECS	AME8808 NECS yyww	2.9V	DPAK-2	-40°C to +85°C
AME8808OECS	AME8808 OECS yyww	3.1V	DPAK-2	-40°C to +85°C

Please consult AME sales office or authorized Rep./Distributor for other output voltage and package type availability.

■ Absolute Maximum Ratings

Parameter	Maximum	Unit
Input Voltage	8	V
Output Current	1	A
Input, Output Voltage	GND - 0.3 to V_{DD} + 0.3	V
ESD Classification	B	

■ Recommended Operating Conditions

Parameter	Rating	Unit
Supply Voltage	4.5 to 5.5	V
Ambient Temperature Range	-40 to +85	^{o}C
Junction Temperature	-40 to +125	^{o}C

■ Thermal Information

Parameter		Maximum	Unit
Thermal Resistance (θ_{jc})	SOT-223	160	^{o}C / W
	DPAK-2	60	
Internal Power Dissipation (P_D) ($\Delta T = 100^{o}C$)	SOT-223	625	mW
	DPAK-2	3,000	
Maximum Junction Temperature		150	^{o}C
Maximum Lead Temperature (10 Sec)		300	^{o}C

Caution: Stress above the listed absolute rating may cause permanent damage to the device

■ Electrical Specifications

TA = 25° C unless otherwise noted

Parameter	Symbol	Test Condition		Min	Typ	Max	Units
Input Voltage	V_{IN}			Note 1		8	V
Output Voltage Accuracy	V_O	I_O=1mA		-1.5		1.5	%
Dropout Voltage	$V_{DROPOUT}$	I_O=750mA V_O=V_{ONOM} -2.0%	1.5V<$V_{O(NOM)}$<=2.0V		See chart	1400	mV
			2.0V<$V_{O(NOM)}$<=2.8V			1000	
			2.8V<$V_{O(NOM)}$<3.8V			750	
Output Current	I_O	V_O>1.2V		750			mA
Current Limit	I_{LIM}	V_O>1.2V		750	850		mA
Short Circuit Current	I_{SC}	V_O<0.8V			300	600	mA
Quiescent Current	I_Q	I_O=0mA			30	50	μA
Ground Pin Current	I_{GND}	I_O=1mA to 750mA			30	50	μA
Line Regulation	REG_{LINE}	I_O=5mA V_{IN}=V_O+1 to V_O+2	V_O < 2.0V			0.15	%
			V_O >= 2.0V		0.02	0.1	%
Load Regulation	REG_{LOAD}	I_O=1mA to 750mA			0.2	1	%
Over Temerature Shutdown	OTS				150		°C
Over Temerature Hysterisis	OTH				30		°C
V_O Temperature Coefficient	TC				30		ppm/°C
Power Supply Rejection	PSRR	I_O=100mA C_O=2.2mF	f=1kHz		50		dB
			f=10kHz		20		
			f=100kHz		15		
Output Voltage Noise	eN	f=10Hz to 100kHz I_O=10mA,C_{BYP}=0mF	Co=2.2mF		30		mVrms
			Co=100mF		20		

Note1:$V_{IN(min)}$=V_{OUT}+$V_{DROPOUT}$

■ Detailed Description

The AME8808 family of CMOS regulators contain a PMOS pass transistor, voltage reference, error amplifier, over-current protection, and thermal shutdown.

The P-channel pass transistor receives data from the error amplifier, over-current shutdown, and thermal protection circuits. During normal operation, the error amplifier compares the output voltage to a precision reference. Over-current and Thermal shutdown circuits become active when the junction temperature exceeds 150ºC, or the current exceeds 750mA. During thermal shutdown, the output voltage remains low. Normal operation is restored when the junction temperature drops below 120ºC.

The AME8808 switches from voltage mode to current mode when the load exceeds the rated output current. This prevents over-stress. The AME8808 also incorporates current foldback to reduce power dissipation when the output is short circuited. This feature becomes active when the output drops below 0.8 volts, and reduces the current flow by 65%. Full current is restored when the voltage exceeds 0.8 volts.

■ External Capacitors

The AME8806/8809 is stable with an output capacitor to ground of 2.2µF or greater. Ceramic capacitors have the lowest ESR, and will offer the best AC performance. Conversely, Aluminum Electrolytic capacitors exhibit the highest ESR, resulting in the poorest AC response. Unfortunately, large value ceramic capacitors are comparatively expensive. One option is to parallel a 0.1µF ceramic capacitor with a 10µF Aluminum Electrolytic. The benefit is low ESR, high capacitance, and low overall cost.

A second capacitor is recommended between the input and ground to stabilize Vin. The input capacitor should be at least 0.1µF to have a beneficial effect.

All capacitors should be placed in close proximity to the pins. A "Quiet" ground termination is desirable. This can be achieved with a "Star" connection.

■ Enable

The Enable pin normally floats high. When actively, pulled low, the PMOS pass transistor shuts off, and all internal circuits are powered down. In this state, the quiescent current is less than 1µA. This pin behaves much like an electronic switch.

Ground Current vs. Input Voltage

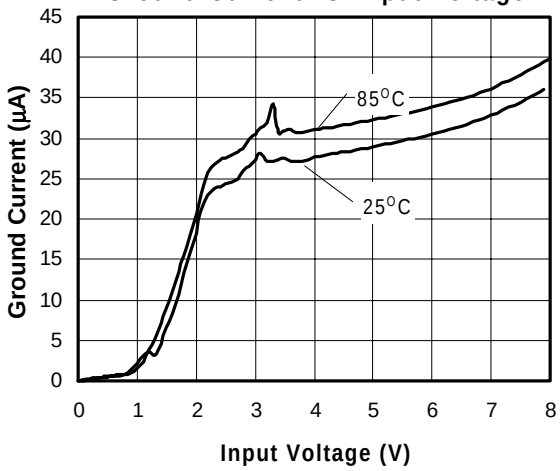

Load Step (1mA-600mA)

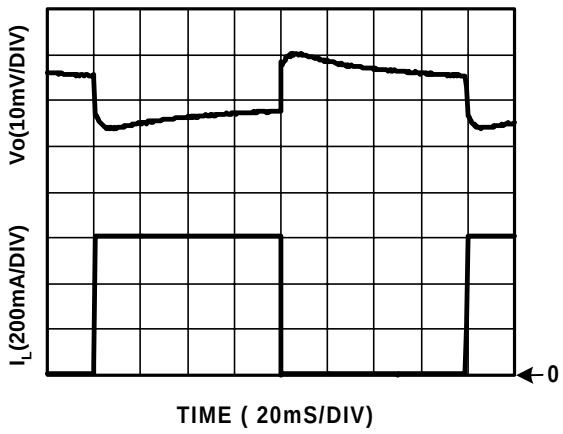

Drop Out Voltage vs. Output Voltage

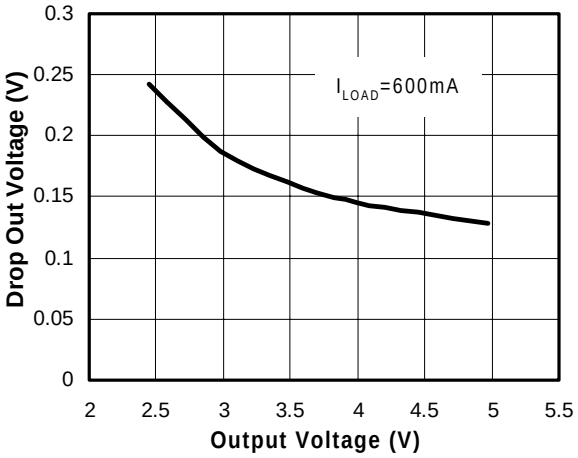

Power Supply Rejection Ratio

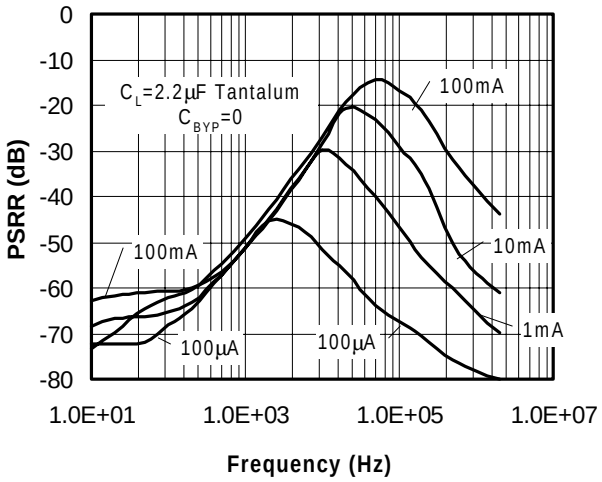

Safe Operating Area

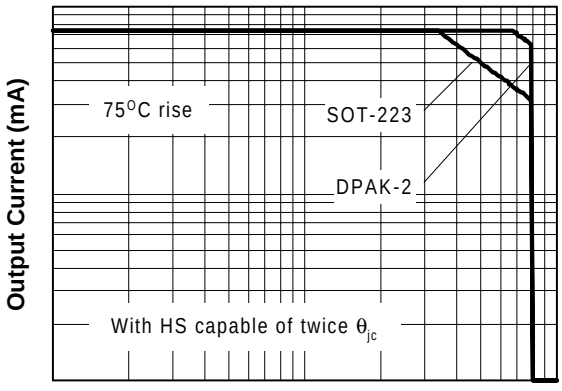

Line Transient Response

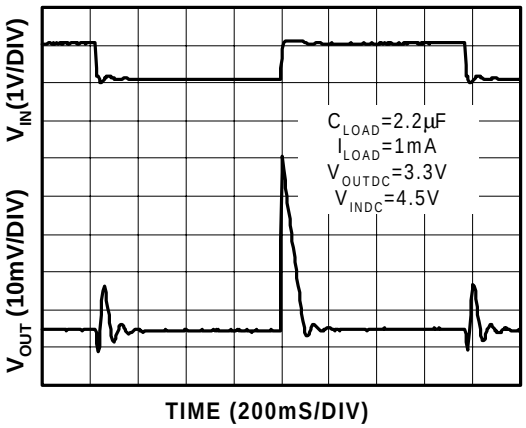

Noise Measurement

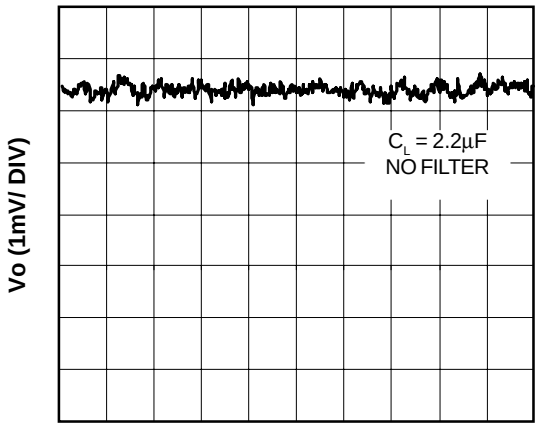

Overtemperature Shutdown

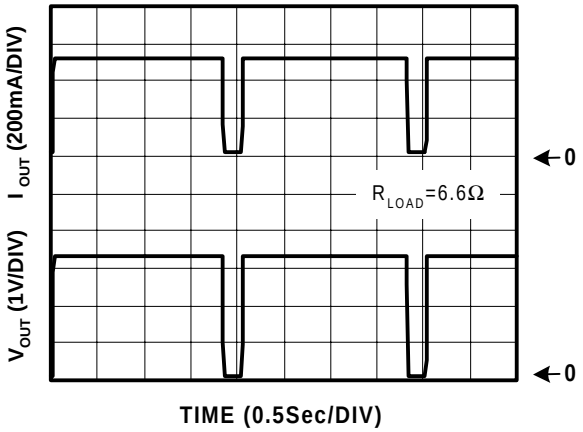

Current Limit Response

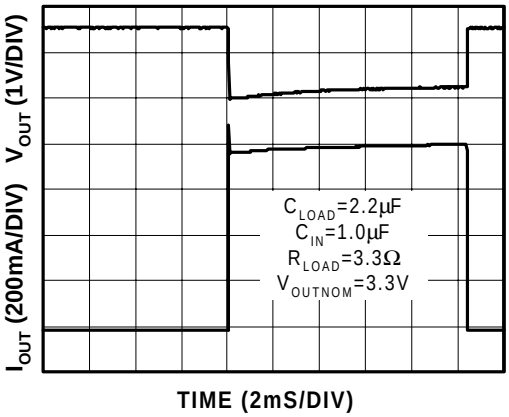

Short Circuit Response

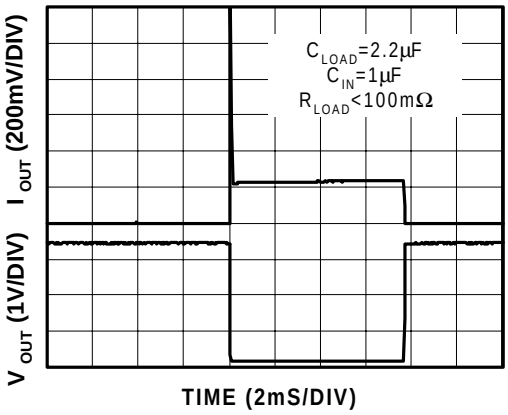

■ Package Dimension

TO-252 (DPAK)

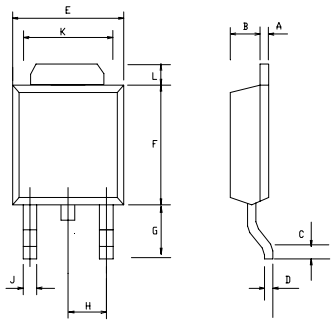

SYMBOLS	MILLIMETERS		INCHES	
	MIN	MAX	MIN	MAX
A	0.45	0.58	0.0177	0.023
B	1.60	1.95	0.06	0.0768
C	0.51	-	0.02	-
D	0.45	0.60	0.0177	0.0236
E	6.40	6.80	0.252	0.2677
F	5.40	5.80	0.2126	0.2283
G	2.20	2.85	0.0866	0.1122
H	-	* 2.30	-	* 0.0906
I	-	0.90	-	0.0354
J	-	0.97	-	0.038
K	5.20	5.50	0.20	0.22
L	0.89	2.03	0.035	0.08

* : Typical value

NOTES :
1. CONTROLLING DIMENSION : MILLIMETERS.
2. MAXIMUM LEAD THICKNESS INCLUDES LEAD FINISH THICKNESS MINIMUM LEAD THICKNESS IS THE MINIMUM THICKNESS OF BASE MATERIAL.

TO-252 (DPAK)

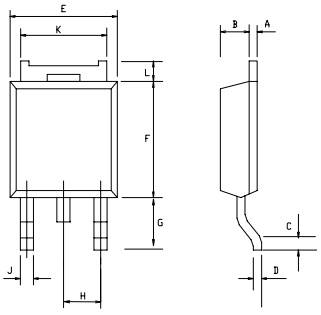

SYMBOLS	MILLIMETERS		INCHES	
	MIN	MAX	MIN	MAX
A	0.45	0.58	0.0177	0.023
B	1.60	1.95	0.06	0.0768
C	0.51	-	0.02	-
D	0.45	0.60	0.0177	0.0236
E	6.40	6.80	0.252	0.2677
F	5.40	5.80	0.2126	0.2283
G	2.20	2.85	0.0866	0.1122
H	-	* 2.30	-	* 0.0906
I	-	0.90	-	0.0354
J	-	0.97	-	0.038
K	5.20	5.50	0.20	0.22
L	0.89	2.03	0.035	0.08

* : Typical value

NOTES :
1. CONTROLLING DIMENSION : MILLIMETERS.
2. MAXIMUM LEAD THICKNESS INCLUDES LEAD FINISH THICKNESS MINIMUM LEAD THICKNESS IS THE MINIMUM THICKNESS OF BASE MATERIAL.

■ Package Dimension

SOT-223

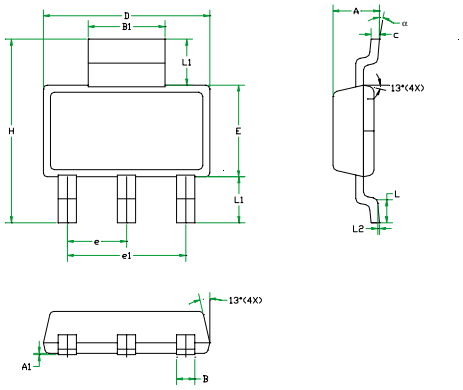

SYMBOLS	MILLIMETERS		INCHES	
	MIN	MAX	MIN	MAX
A	1.50	1.80	0.0591	0.0709
A_1	0.02	0.10	0.0008	0.0039
B	0.60	0.838	0.0236	0.033
B_1	2.895	3.15	0.1140	0.1240
C	0.24	0.381	0.0094	0.0150
D	6.299	6.706	0.2480	0.2640
E	3.30	3.708	0.1299	0.1460
e	2.30 BSC		0.090 BSC	
e_1	4.60 BSC		0.181 BSC	
H	6.70	7.30	0.2638	0.2874
L	0.91 MIN		0.0360 MIN	
L_1	2.00 MAX		0.0787 MAX	
L_2	0.06 BSC		0.0024 BSC	
α	0°	10°	0°	10°



www.analogmicro.com
E-Mail: info@analogmicro.com

Life Support Policy:
These products of Analog Microelectronics, Inc. are not authorized for use as critical components in life-support devices or systems, without the express written approval of the president of Analog Microelectronics, Inc.
Analog Microelectronics, Inc. reserves the right to make changes in the circuitry and specifications of its devices and advises its customers to obtain the latest version of relevant information.
© Analog Microelectronics, Inc., August 2001
Document: 2006-DS8808-C

Corporate Headquarters
Analog Microelectronics, Inc.
3100 De La Cruz Blvd. Suite 201
Santa Clara, CA. 95054-2046
Tel : (408) 988-2388
Fax: (408) 988-2489

Asia Pacific Headquarters
AME, Inc.
2F, 187 Kang-Chien Road, Nei-Hu District
Taipei 114, Taiwan, R.O.C.
Tel : 886 2 2627-8687
Fax: 886 2 2659-2989