AME

AME5176

Synchronous Boost Converter With Low Quiescent Current

■ General Description

The AME5176 is a high efficiency synchronous boost converter, which is based on a hysteretic controller topology using synchronous rectification to obtain maximum efficiency at minimal quiescent currents. The converter provides a power supply solution for products powered by a variety of batteries such as single-cell, dual-cell, tree-cell alkaline, NiCd or NiMH, or one-cell Li-Ion or Li-polymer battery.

The output voltage is internally programmable in a range from 1.8V to 5V in increments of 0.1V. Moreover, the converter can be switched off by an enable pin to minimize battery drain. The maximum average input current is limited to 450mA for current limit.

■ Features

- Very Low Start-up Voltage at 0.8V
- Output Voltage Range: 1.8V~5V in 0.1V increments
- Output Voltage Accuracy ± 2%
- Output Currents up to 100mA
- No Schottky Diode Required
- Support Inductor of Multilayer Type
- Typical Shutdown Current Less than 0.7uA
- Typical Quiescent Current Less than 6.5uA
- Over Current Protection
- Over Temperature Protection
- Available in SOT-23, SOT-25 and SOT-89 Package
- RoHS Compliant and Halogen Free

■ Application

- All One-Cell, Two-Cell and Three-Cell Alkalie, NiCd, NimH and Single-Cell Batteries
- Wireless Mouse
- Mobile-Applications
- Hand-Held Devices

■ Typical Application

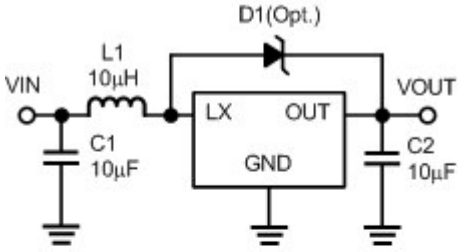

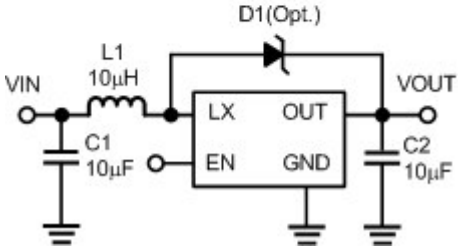

■ Functional Block Diagram

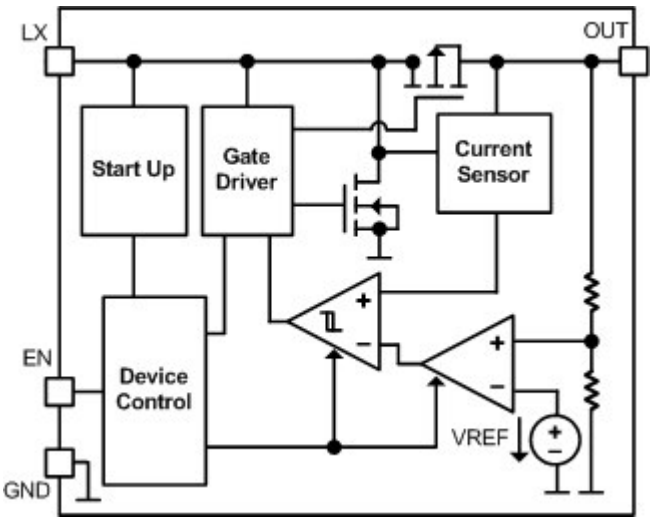

■ Pin Configuration

SOT-25
Top View

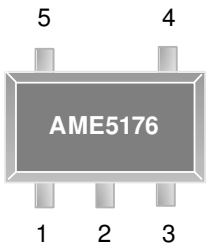

AME5176-AEVxxx

1. LX
2. GND
3. OUT
4. NC
5. EN

*** Die Attach:**
Conductive Epoxy

SOT-25
Top View

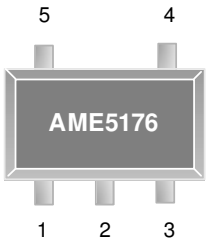

AME5176-BEVxxx

1. EN
2. OUT
3. NC
4. GND
5. LX

*** Die Attach:**
Non-Conductive Epoxy

SOT-23
Top View

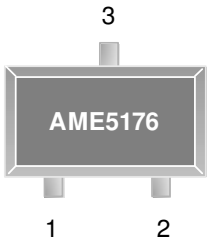

AME5176-AETxxx

1. GND
2. LX
3. OUT

*** Die Attach:**
Non-Conductive Epoxy

SOT-89
Top View

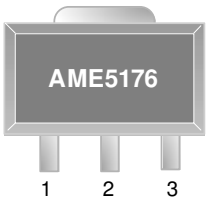

AME5176-AFTxxx

1. GND
2. OUT
3. LX

*** Die Attach:**
Non-Conductive Epoxy

■ Pin Description

Pin No.				Pin Name	Pin Description
SOT-25		SOT-89	SOT-23		
A	B				
1	5	3	2	LX	Switch pin which connected to inductor.
2	4	1	1	GND	Ground.
3	2	2	3	OUT	Output Voltage Pin.
4	3	N/A	N/A	NC	No connect Pin.
5	1	N/A	N/A	EN	Chip Enable (Active High).

■ Ordering Information

AME5176 - x x x xxx

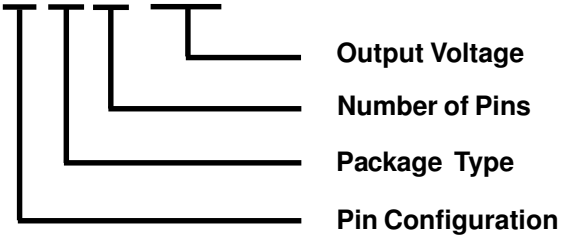

Pin Configuration	Package Type	Number of Pins	Output Voltage
A (SOT-23) 1. GND 2. LX 3. OUT A (SOT-25) 1. LX 2. GND 3. OUT 4. NC 5. EN B (SOT-25) 1. EN 2. OUT 3. NC 4. GND 5. LX A (SOT-89) 1. GND 2. OUT 3. LX	E: SOT-2X F: SOT-89	T: 3 V: 5	180: 1.8V 190: 1.9V 200: 2.0V : : : : 490: 4.9V 500: 5.0V

■ Absolute Maximum Ratings

Parameter	Maximum	Unit
Input Voltage	-0.3V to 7	V
LX Voltage	-0.3V to 7	V
Output Voltage	-0.3V to 7	V
EN Voltage	-0.3V to 7	V
Electrostatic Discharge (HBM)	2000	V
Electrostatic Discharge (MM)	200	V
Electrostatic Discharge (CDM)	1000	V
Junction Temperature	150	°C
Storage Temperature	-65 to +150	°C

■ Recommended Operating Conditions

Parameter	Symbol	Rating	Unit
Input Voltage	V_{IN}	0.8V to 5.5	V
Output Voltage	V_{OUT}	1.8V to 5	
Junction Temperature Range	T_J	-40 to +125	°C
Ambient Temperature Range	T_A	-40 to +85	

■ Thermal Information

Parameter	Package	Die Attach	Symbol	Maximum	Unit
Thermal Resistance* (Junction to Case)	SOT-23	Non-Conductive Epoxy	θ_{JC}	140	°C / W
	SOT-25	Non-Conductive Epoxy		140	
		Conductive Epoxy		81	
	SOT-89	Non-Conductive Epoxy		46	
Thermal Resistance (Junction to Ambient)	SOT-23	Non-Conductive Epoxy	θ_{JA}	280	
	SOT-25	Non-Conductive Epoxy		280	
		Conductive Epoxy		260	
	SOT-89	Non-Conductive Epoxy		180	
Internal Power Dissipation	SOT-23	Non-Conductive Epoxy	P_D	400	mW
	SOT-25	Non-Conductive Epoxy		400	
		Conductive Epoxy		400	
	SOT-89	Non-Conductive Epoxy		550	
Lead Temperature (soldering 10 sec)**				260	°C

* Measure θ_{JC} on backside center of molding compound if IC has no tab.
** MIL-STD-202G 210F

■ Electrical Specifications

T_A = 25°C, unless otherwise noted.

Parameter	Symbol	Test Condition	Min	Typ	Max	Units
DC/DC Stage						
Minimum Input Voltage At Startup	$V_{START-UP}$	I_{OUT}=1mA, V_{IN}:0→2V		0.8		V
Hold-on Voltage(V)	V_{HOLD}	I_{OUT}=1mA, V_{IN}:2V→0V			0.7	V
Output Accuracy	ΔV_{OUT}		-2		2	%
Output Voltage	ΔV_{OUT}	V_{OUT}=1.8V		1.8		V
		V_{OUT}=2.1V		2.1		V
		V_{OUT}=2.2V		2.2		V
		V_{OUT}=2.7V		2.7		V
		V_{OUT}=3.0V		3		V
		V_{OUT}=3.3V		3.3		V
		V_{OUT}=5.0V		5		V
Quiescent Current	I_Q	V_{OUT} x 1.2		6.5	10	μA
Power MOSFET						
Rectifying Switch on Resistance	$R_{DS(ON)_P}$	V_{OUT}=3.3V		1		Ω
Main Switch on Resistance	$R_{DS(ON)_N}$	V_{OUT}=3.3V		1		Ω
Enable Control (SOT-25 Only)						
EN Logic-High Voltage	V_{IH}		0.8			V
EN Logic-Low Voltage	V_{IL}				0.4	V
EN Input Current	I_{EN}	Clamp on GND or V_{OUT}		0.1	1	μA
Shutdown Current	I_{SD}	V_{EN}=0V, V_{IN}=1.2V I_{OUT}=0mA		0.7		μA
Protection						
Switch Current Limit	I_{SW}	V_{OUT}=3.3V		450		mA
NMOS Leakage	$I_{leakage_N}$	V_{OUT}=3.3V			1	μA
PMOS Leakage	$I_{leakage_P}$	V_{OUT}=3.3V			1	μA
Thermal Shutdown Temperature	T_{SD}			150		°C
Thermal Shutdown Hysteresis	ΔT_{SD}			20		°C

■ Detailed Description

The AME5176 is a high efficiency synchronous boost converter, which is based on a hysteretic current controller topology using synchronous rectification to obtain maximum efficiency at minimal quiescent current condition. The converter allows the use of low cost chip inductor (Support Inductor of Multilayer Type) and small ceramic input and output capacitors total only three external components.

Enable Function

The AME5176 has a dedicated enable pin. The device is enabled when pull the EN above 0.8V. Furthermore, the device is disabled when pull the EN below 0.4V.

Over Current Limit

The AME5176 provide the current limit protection function. When inductor current reaches the internal switch current limit threshold, the internal switch will be turned off. When the over current state is eliminated, the IC resumes its nornal operation.

Over Temperature Protection

When the junction temperature exceeds 150°C, the over temperature protection circuit turns off the internal switch, the converter will not turn back on until the device has cooled approximately 20 degrees. For normal operation, the junction temperature cannot exceed T_J=+125°C.

■ Application Information

Inductor

The Inductor is required to supply energy to the load while being driven by switched high side MOSFET. Choose inductance that will affect the period proportional to inductance. Therefore, choosing greater inductance can improve system efficiency since the switching frequency is decreased to reduce system switching losses. Finally, the choice of which style inductor to utilize mainly depends on the price vs. size requirements and any EMI constraints. Suggesting the inductance range is from 10μH to 33μH.

Input Capacitor

Use low ESR capacitors for the best performance. When using ceramic capacitors make sure that they have enough capacitance to provide sufficient charge to prevent excessive voltage ripple at input terminal. Furthermore, an input capacitor improves EMI problems in the power supply circuit.

Output Capacitor

The output capacitor is required to place enough capacitance to improve the system efficiency and output ripple. Ceramic capacitors are recommended. Low ESR capacitors are preferred to keep the output voltage ripple low. Furthermore, the output capacitance can be estimated by:

$$C_{OUT} \geq \frac{L}{2}$$

Where L is the inductance. The characteristics of the output capacitor also affect the stability transient behavior of the regulation system. The AME5176 can be optimized for a wide range of capacitance and ESR values, such as solid tantalum, ceramic, and aluminum electrolytic capacitors.

Component Reference	Manufacturer	Part Number	Value
C1	Murata	GRM188R60JA106ME47	10µF, 6.3V, X5R
C2	Murata	GRM188R60JA106ME47	10µF, 6.3V, X5R
L1	Murata	LQH43PN100M26	10µH
D1	ON semi	MBR130T1G	1A, 30V

Table 1. List of Components

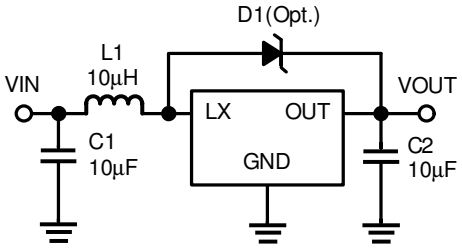

Typical Application Circuit

Layout Considerations

PCB Layout is important to achieve stable operation for switching power system at the high switching frequencies and high peak currents conditions. For best results, follow these guidelines:

(1) The input capacitor placed as close and wide as possible to V_{IN} and GND pins of the IC is recommended.

(2) The output capacitor placed as close and wide as possible to V_{OUT} and GND pins of the IC is recommended.

(3) Place Lx Pin as short and wide to the IC as possible.

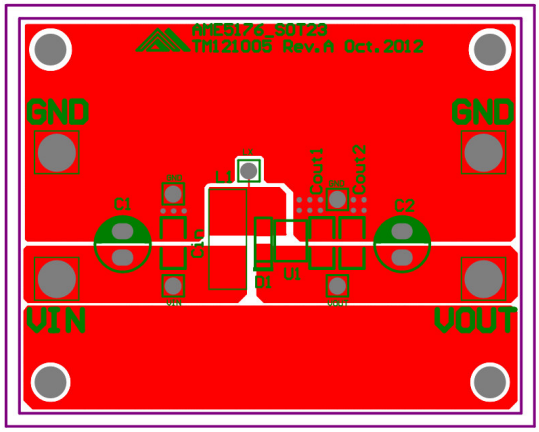

PCB Top View

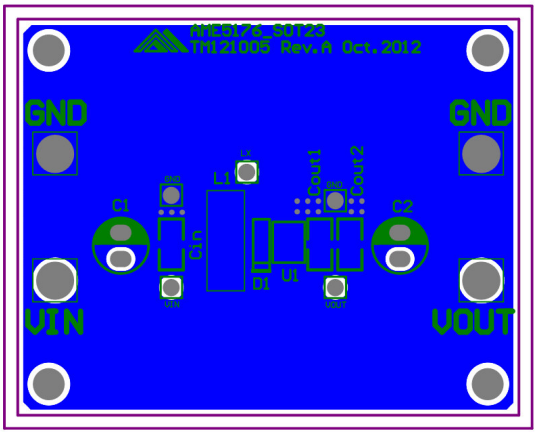

PCB Bottom View

■ Characterization Curve

Efficiency vs. Output Current

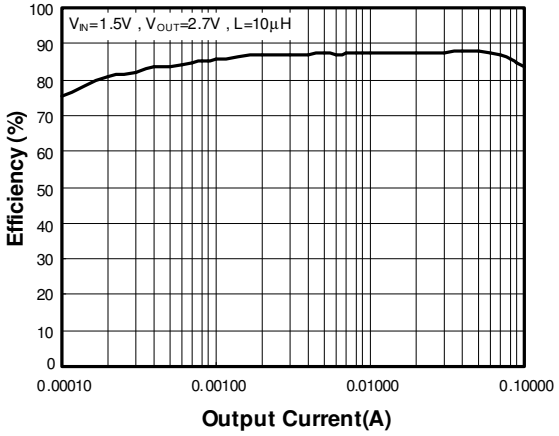

Quiescent Current vs. Temperature

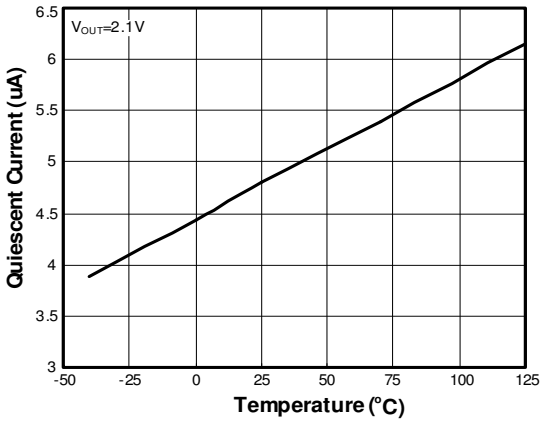

Output Voltage vs. Temperature

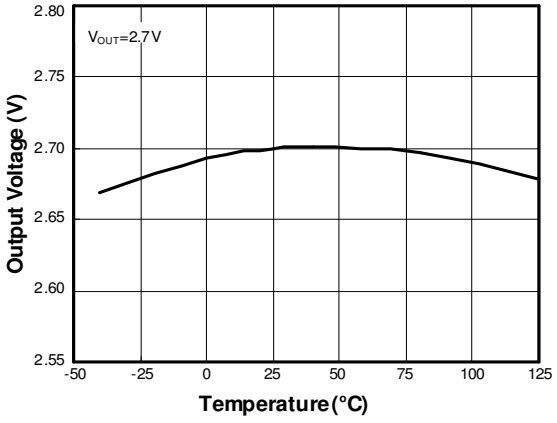

CCM Output Voltage Ripple

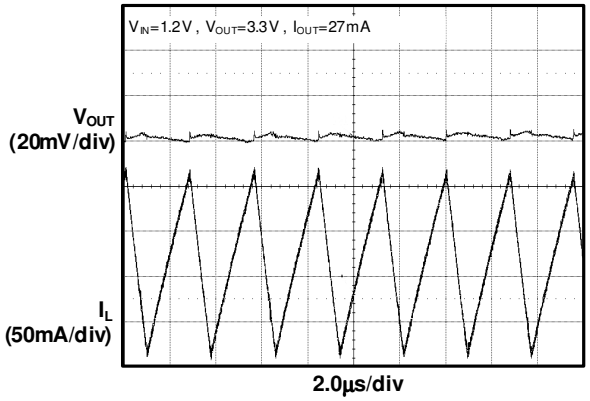

DCM Output Voltage Ripple

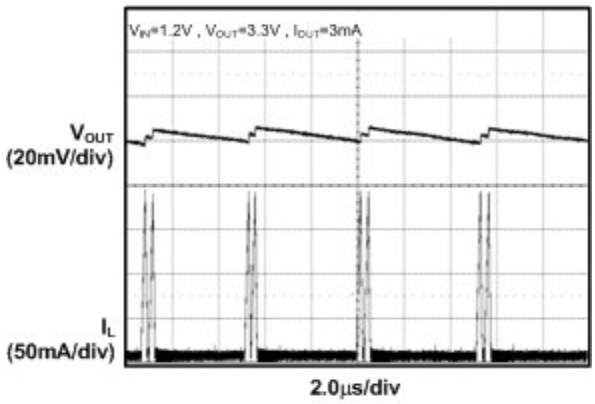

Power ON from Input Voltage

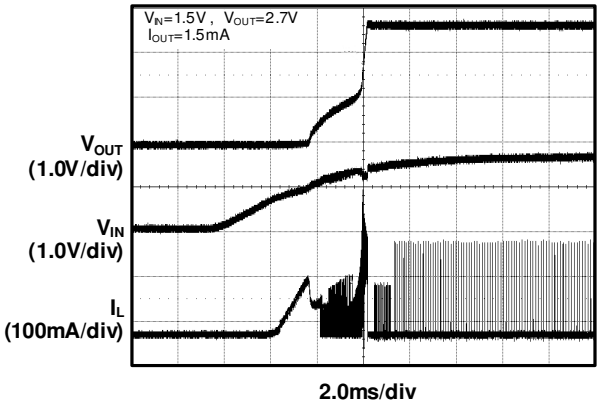

■ Tape and Reel Dimension

SOT-23

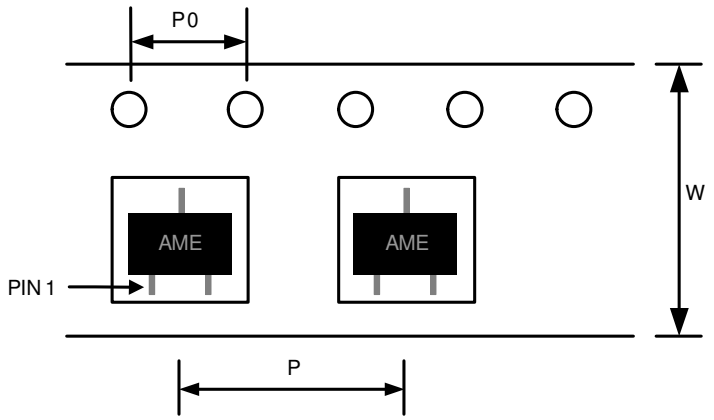

Carrier Tape, Number of Components Per Reel and Reel Size

Package	Carrier Width (W)	Pitch (P)	Pitch (P0)	Part Per Full Reel	Reel Size
SOT-23	8.0±0.1 mm	4.0±0.1 mm	4.0±0.1 mm	3000pcs	180±1 mm

SOT-25

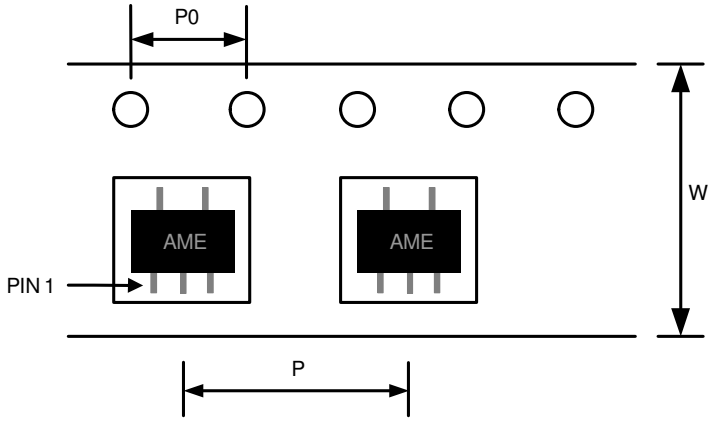

Carrier Tape, Number of Components Per Reel and Reel Size

Package	Carrier Width (W)	Pitch (P)	Pitch (P0)	Part Per Full Reel	Reel Size
SOT-25	8.0±0.1 mm	4.0±0.1 mm	4.0±0.1 mm	3000pcs	180±1 mm

■ Tape and Reel Dimension (Contd.)

SOT-89

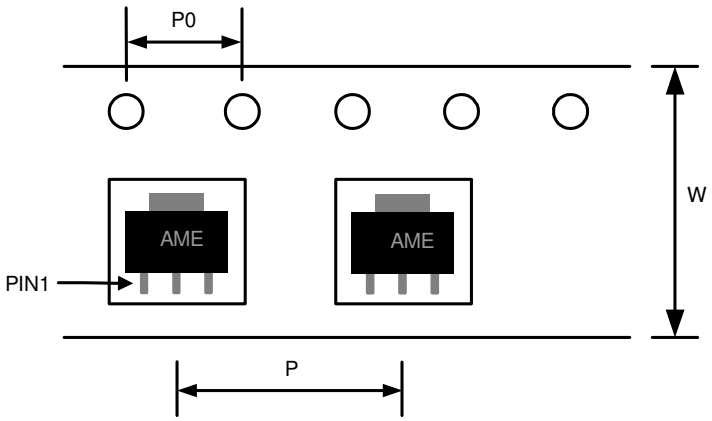

Carrier Tape, Number of Components Per Reel and Reel Size

Package	Carrier Width (W)	Pitch (P)	Pitch (P0)	Part Per Full Reel	Reel Size
SOT-89	12.0±0.1 mm	8.0±0.1 mm	4.0±0.1 mm	1000pcs	180±1 mm

■ Package Dimension

SOT-23

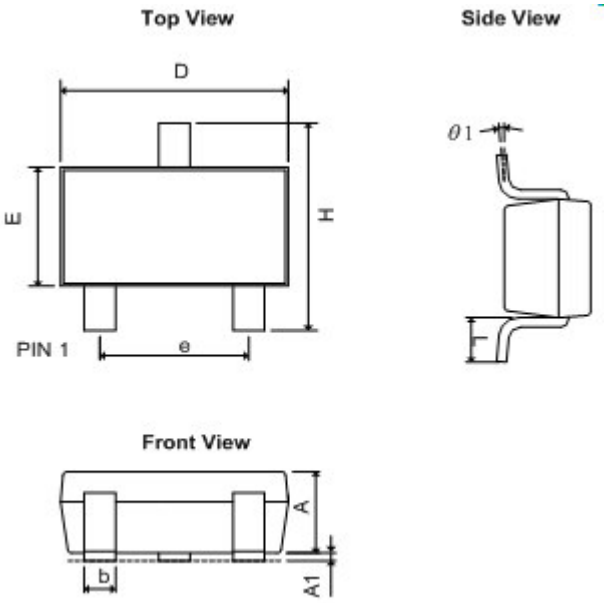

SYMBOLS	MILLIMETERS		INCHES	
	MIN	MAX	MIN	MAX
A	0.90	1.40	0.0354	0.0551
A_1	0.00	0.15	0.0000	0.0059
b	0.30	0.50	0.0118	0.0197
D	2.70	3.10	0.1063	0.1220
E	1.40	1.80	0.0551	0.0709
e	1.90 BSC		0.0748 BSC	
H	2.40	3.00	0.0945	0.1181
L	0.35BSC		0.0138 BSC	
θ1	0°	10°	0°	10°

■ Lead Pattern Drawing

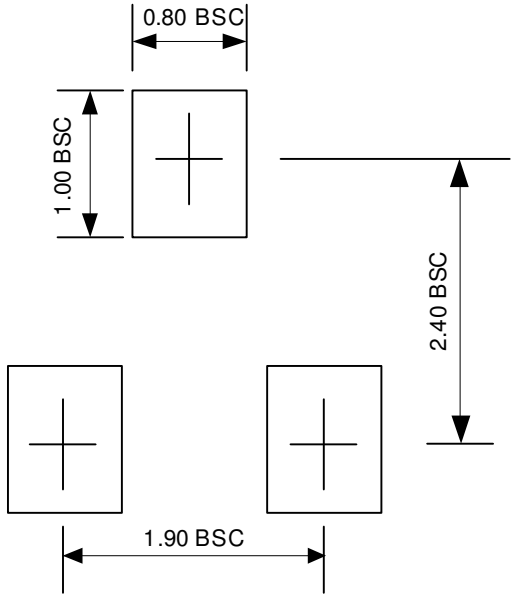

Note:

1. Lead pattern unit description:
   BSC: Basic. Represents theoretical exact dimension or dimension target.
2. Dimensions in Millimeters.
3. General tolerance ±0.05mm unless otherwise specified.

■ Package Dimension (Contd.)

SOT-25

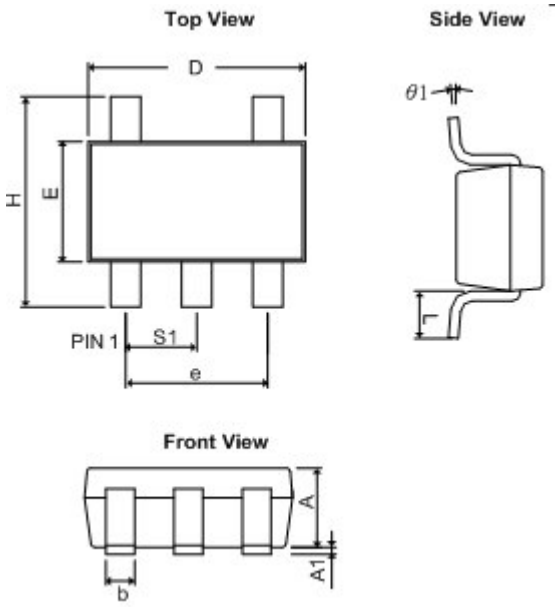

SYMBOLS	MILLIMETERS		INCHES	
	MIN	MAX	MIN	MAX
A	0.90	1.30	0.0354	0.0512
A_1	0.00	0.15	0.0000	0.0059
b	0.30	0.55	0.0118	0.0217
D	2.70	3.10	0.1063	0.1220
E	1.40	1.80	0.0551	0.0709
e	1.90 BSC		0.0748 BSC	
H	2.60	3.00	0.1024	0.1181
L	0.37 BSC		0.0146 BSC	
θ1	0°	10°	0°	10°
S_1	0.95 BSC		0.0374 BSC	

■ Lead Pattern Drawing

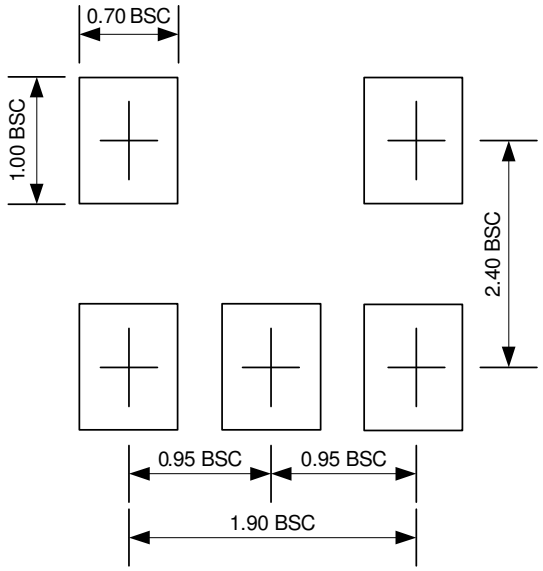

Note:

1. Lead pattern unit description:
   BSC: Basic. Represents theoretical exact dimension or dimension target.
2. Dimensions in Millimeters.
3. General tolerance ±0.05mm unless otherwise specified.

■ Package Dimension (Contd.)

SOT-89

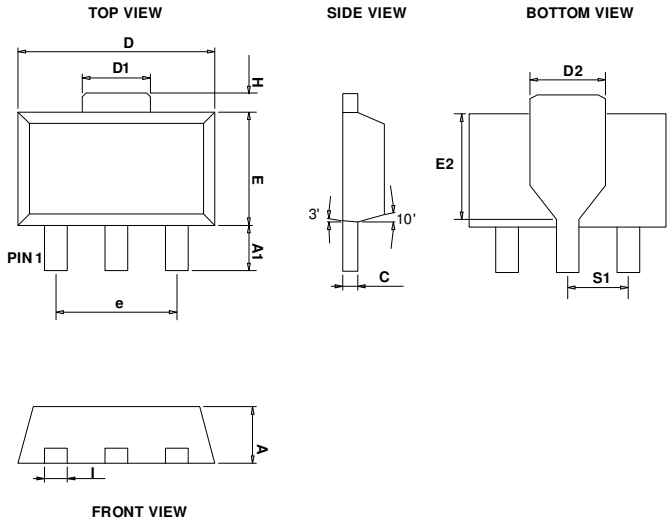

SYMBOLS	MILLIMETERS		INCHES	
	MIN	MAX	MIN	MAX
A	1.39	1.60	0.0547	0.0630
A_1	0.8 REF		0.0315 REF	
C	0.35	0.44	0.0138	0.0173
D	4.39	4.60	0.1728	0.1811
D_1	1.35	1.83	0.0531	0.0720
E	2.28	2.60	0.0898	0.1024
I	0.32	0.56	0.0126	0.0220
e	3.00 REF		0.1181 REF	
H	0.70 REF		0.0276 REF	
S1	1.50 REF		0.0591 REF	
E2	2.05	2.60	0.0807	0.1024
D2	1.50	1.85	0.0591	0.0728

■ Lead Pattern Drawing

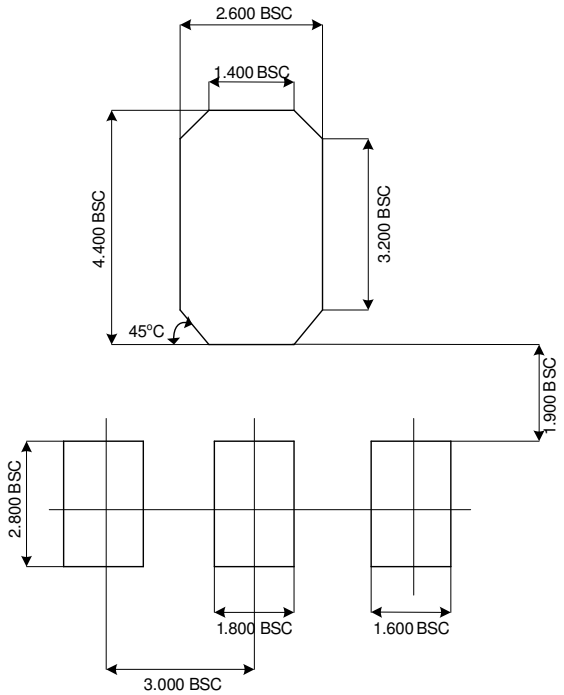

Note:

1. Lead pattern unit description:
   BSC: Basic. Represents theoretical exact dimension or dimension target.
2. Dimensions in Millimeters.
3. General tolerance ±0.05mm unless otherwise specified.



www.ame.com.tw
E-Mail: sales@ame.com.tw

Life Support Policy:
These products of AME, Inc. are not authorized for use as critical components in life-support devices or systems, without the express written approval of the president of AME, Inc.

AME, Inc. reserves the right to make changes in the circuitry and specifications of its devices and advises its customers to obtain the latest version of relevant information.

© AME, Inc. , November 2014

Document: A015A-DS5176-B.01

Corporate Headquarter

AME, Inc.

8F, 12, WenHu St., Nei-Hu
Taipei 114, Taiwan .
Tel: 886 2 2627-8687
Fax: 886 2 2659-2989