# Series AME25-CJZ

## 25 Watt | AC-DC / DC-DC Converter

Picture coming soon

### FEATURES:

- I/O Isolation 3000VAC
- Operating Temp: -25 ˚C to +70 ˚C
- Input: 85-264VAC, 47-63Hz, or 120-370VDC
- Over current, Over Voltage Protection
- Continuous Short circuit protection
- Energy Star compliant
- Compact package
- Efficiency up to 87%

## Models

### Single output

| Model | Input Voltage (VAC/Hz) | Input Voltage (VDC) | Output Voltage (V) | Output Current max (A) | Maximum capacitive Load (µF) | Efficiency 230VAC (%) |
|---|---|---|---|---|---|---|
| AME25-3.3SCJZ | 85-264/47-63 | 120-370 | 3.3 | 4.1 | 48000 | 73 |
| AME25-5SCJZ | 85-264/47-63 | 120-370 | 5 | 4.1 | 12240 | 74 |
| AME25-9SCJZ | 85-264/47-63 | 120-370 | 9 | 2.5 | 5600 | 78 |
| AME25-12SCJZ | 85-264/47-63 | 120-370 | 12 | 2.1 | 5400 | 82 |
| AME25-15SCJZ | 85-264/47-63 | 120-370 | 15 | 1.6 | 2400 | 83 |
| AME25-24SCJZ | 85-264/47-63 | 120-370 | 24 | 1.1 | 1440 | 85 |
| AME25-48SCJZ | 85-264/47-63 | 120-370 | 48 | 0.5 | 500 | 87 |

## Input Specifications

| Parameters | Conditions | Typical | Maximum | Units |
|---|---|---|---|---|
| Current (full load) | 115 VAC | | 600 | mA |
| | 230 VAC | | 340 | mA |
| Inrush current <2ms (cold start) | 115 VAC | 16 | | A |
| | 230 VAC | 30 | | A |
| Leakage current | 230VAC/50Hz | | 0.3 | mA |
| External fuse | Recommended slow blow type | 3.15 | | A |

## Output Specifications

| Parameters | Conditions | Typical | Maximum | Units |
|---|---|---|---|---|
| Voltage accuracy | | ±2 | | % |
| Line regulation | Full load, main output | ±0.5 | | % |
| | Full load, auxiliary output | ±1.5 | | % |
| Load regulation (single output) | 10-100% load | ±1 | | % |
| Load Regulation (dual output) | 10-100% Balanced load | ±2 | | % |
| Load Regulation (triple & asymmetric separated output) | 10-100% Balanced load, main output | ±3 | | |
| | 10-100% Balanced load, auxiliary output | ±5 | | |
| Minimum load | Single output | 0 | | % |
| | Others | 10 | | % |
| Ripple & Noise * | | 50 | 150 | mV p-p |
| Hold-up time | 115VAC, 20MHz bandwidth | 15 | | ms |
| | 230VAC, 20MHz bandwidth | 80 | | ms |
| Voltage adjustment range | | | ±10 | % of Vout |

## Isolation Specifications

| Parameters | Conditions | Typical | Rated | Units |
|---|---|---|---|---|
| Tested I/O voltage | 60 sec | | 3000 | VAC |
| Isolation voltage between Main and Auxiliary output | 60 sec | | 500 | VDC |
| Isolation Resistance | | >1000 | | MΩ |

## General Specifications

| Parameters | Conditions | Typical | Maximum | Units |
|---|---|---|---|---|
| Switching frequency | 100% load | 65 | | KHz |
| Protection class | | Class I | | |
| Over current protection | | ≥110 | | % of Iout |
| Over voltage protection | | Zener diode clamp | | |
| Short circuit protection | | Continuous, Auto recovery | | |
| Operating temperature | See derating curve | -25 to +70 | | ºC |
| Storage temperature | | -25 to +105 | | ºC |
| Maximum Case temperature | | | 100 | ºC |
| Temperature coefficient | | ±0.02 | | % / ºC |
| Cooling | Free air convection | | | |
| Humidity | Non condensing | | 95 | % RH |
| Case material | | Plastic (flammability to UL 94V-0) | | |
| Weight | | 120 | | g |
| Dimensions (L x W x H) | | 2.76 x 1.89 x 0.93 inches 70.0 x 48.0 x 23.5 mm | | |
| MTBF | | > 300,000 hrs (MIL-HDBK -217F, t=+25ºC)/Full Load | | |

NOTE: All specifications in this datasheet are measured at an ambient temperature of 25°C, humidity<75%, nominal input voltage and at rated output load unless otherwise specified.

## Safety Specifications

| Parameters | | |
|---|---|---|
| Agency approvals | cULus, CE | |
| Standards | Information technology Equipment | IEC/EN/UL 60950-1 |
| | EMI - Conducted and radiated emission | EN55022, class B |
| | Electrostatic Discharge Immunity | IEC 61000-4-2 Level 3 |
| | RF, Electromagnetic Field Immunity | IEC 61000-4-3 Level 3 |
| | Electrical Fast Transient/Burst Immunity | IEC 61000-4-4 Level 3 |
| | Surge Immunity | IEC 61000-4-5 Level 3 |
| | RF, Conducted Disturbance Immunity | IEC 61000-4-6 Level 3 |
| | Power frequency Magnetic Field Immunity | IEC 61000-4-8 Level 3 |
| | Voltage dips, Short Interruptions Immunity | IEC 61000-4-11 Class 2 |

## Dimensions

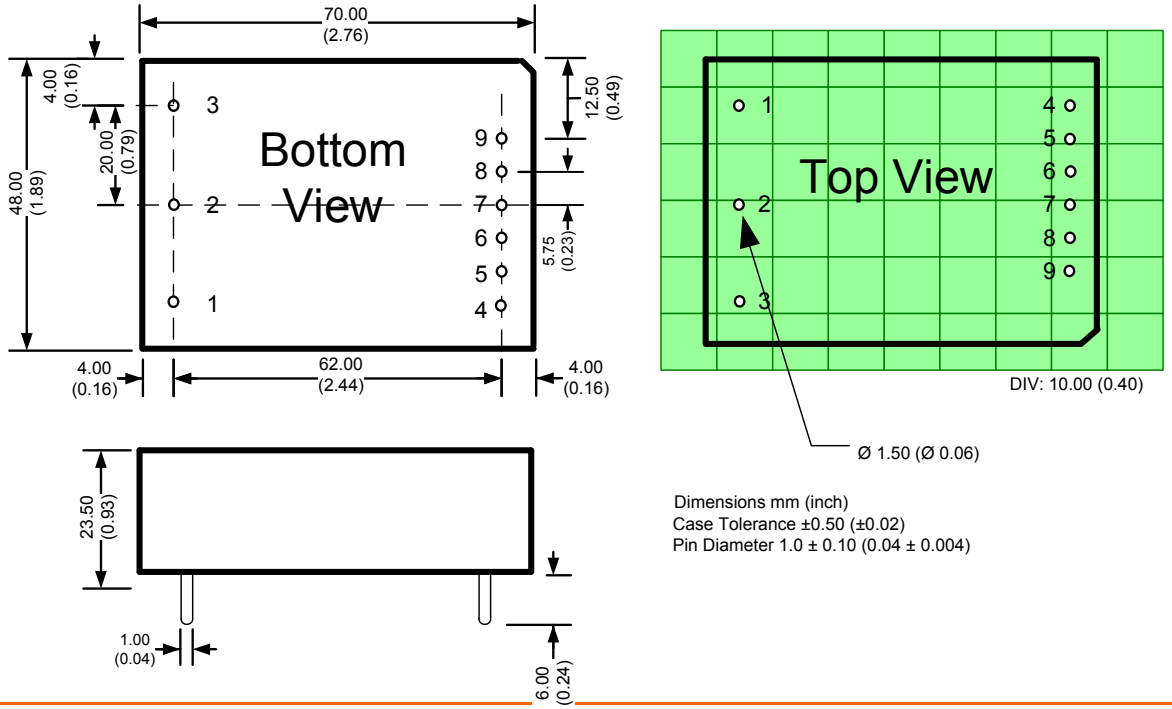


Dimensions mm (inch)
Case Tolerance ±0.50 (±0.02)
Pin Diameter 1.0 ± 0.10 (0.04 ± 0.004)

## Pin Out Specifications

| Pin | Single |
|---|---|
| 1 | Ground |
| 2 | AC Input (N) |
| 3 | AC Input (L) |
| 4 | Trim |
| 5 | -V Output |
| 6 | No pin |
| 7 | No pin |
| 8 | No pin |
| 9 | +V Output |

## Derating

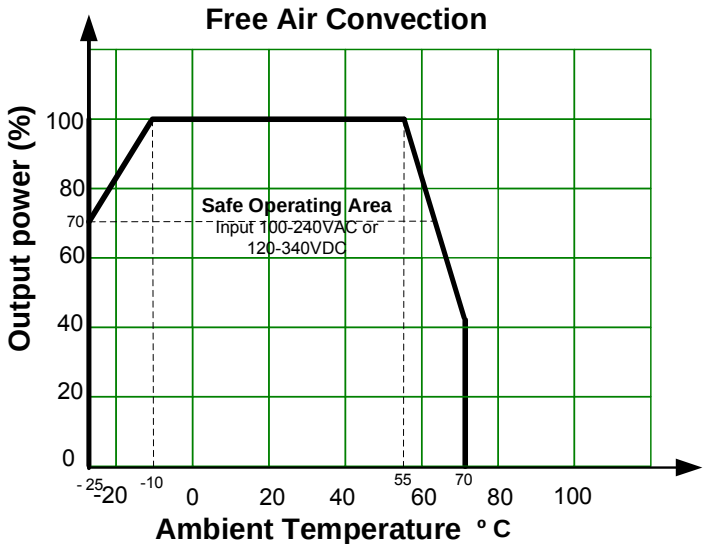


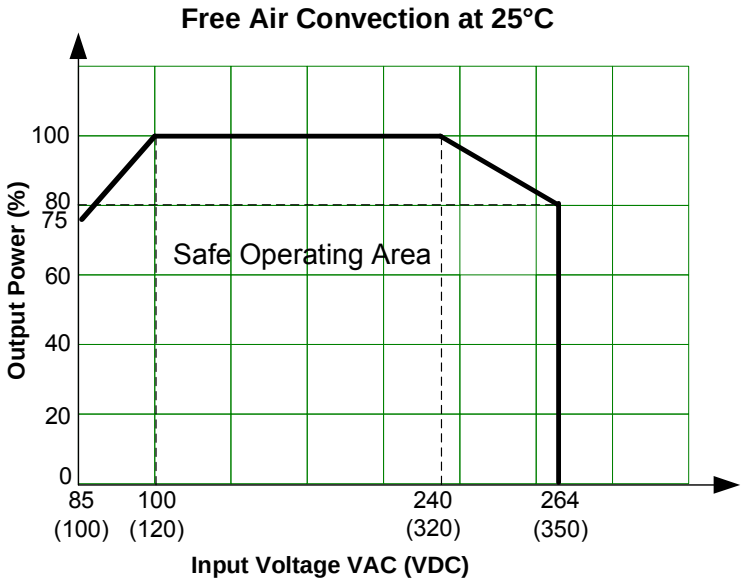


## Typical application circuits

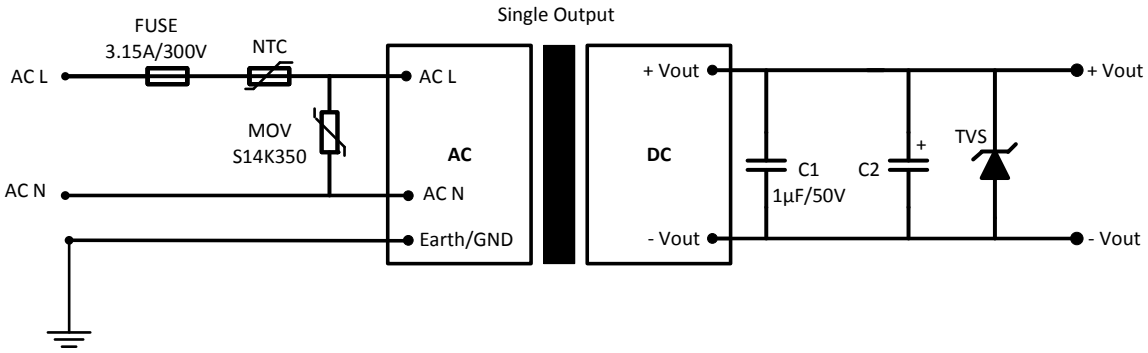


| Model | C2 | TVS |
|---|---|---|
| Single 3.3 & 5 Vout | 330 µF | 7V |
| Single 9 Vout | 330 µF | 12V |
| Single 12 & 15 Vout | 330 µF | 20V |
| Single 24 Vout | 120 µF | 30V |
| Single 48 Vout | 68 µF | 64V |

## Trimming

Output voltage can be externally trimmed by utilizing the methods as shown below

### Fixed Resistor  Variable Potentiometer

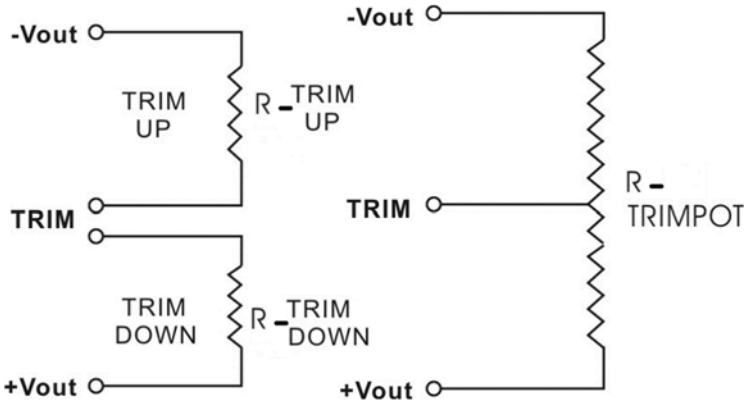


Leave open if not used.

AME20-3.3SCJZ

| Trim down % | 1 | 2 | 3 | 4 | 5 | 6 | 7 | 8 | 9 | 10 |
|---|---|---|---|---|---|---|---|---|---|---|
| Vout (VDC) | 3.27 | 3.23 | 3.2 | 3.17 | 3.14 | 3.1 | 3.07 | 3.04 | 3 | 2.97 |
| Rt down (KΩ) | 181.7 | 84.657 | 59.638 | 45.602 | 36.62 | 28.7 | 24.517 | 21.275 | 17.939 | 15.957 |
| Trim up % | 1 | 2 | 3 | 4 | 5 | 6 | 7 | 8 | 9 | 10 |
| Vout (VDC) | 3.33 | 3.37 | 3.4 | 3.43 | 3.47 | 3.5 | 3.53 | 3.56 | 3.6 | 3.63 |
| Rt up (KΩ) | 174.371 | 63.611 | 42.843 | 32.178 | 24.053 | 20.166 | 17.322 | 15.153 | 12.95 | 11.656 |

AME20-5SCJZ

| Trim down % | 1 | 2 | 3 | 4 | 5 | 6 | 7 | 8 | 9 | 10 |
|---|---|---|---|---|---|---|---|---|---|---|
| Vout (VDC) | 4.95 | 4.9 | 4.85 | 4.8 | 4.75 | 4.7 | 4.65 | 4.6 | 4.55 | 4.5 |
| Rt down (KΩ) | 160.7 | 78.2 | 50.7 | 36.95 | 28.7 | 23.2 | 19.271 | 16.325 | 14.033 | 12.2 |
| Trim up % | 1 | 2 | 3 | 4 | 5 | 6 | 7 | 8 | 9 | 10 |
| Vout (VDC) | 5.05 | 5.1 | 5.15 | 5.2 | 5.25 | 5.3 | 5.35 | 5.4 | 5.45 | 5.5 |
| Rt up (KΩ) | 164 | 81.5 | 54 | 40.25 | 32 | 26.5 | 22.571 | 19.625 | 17.333 | 15.5 |

AME20-9SCJZ

| Trim down % | 1 | 2 | 3 | 4 | 5 | 6 | 7 | 8 | 9 | 10 |
|---|---|---|---|---|---|---|---|---|---|---|
| Vout (VDC) | 8.91 | 8.82 | 8.73 | 8.64 | 8.55 | 8.46 | 8.37 | 8.28 | 8.19 | 8.1 |
| Rt down (KΩ) | 389.533 | 221.43 | 153.157 | 116.145 | 92.925 | 76.997 | 65.393 | 56.562 | 49.617 | 44.011 |
| Trim up % | 1 | 2 | 3 | 4 | 5 | 6 | 7 | 8 | 9 | 10 |
| Vout (VDC) | 9.09 | 9.18 | 9.27 | 9.36 | 9.45 | 9.54 | 9.63 | 9.72 | 9.81 | 9.9 |
| Rt up (KΩ) | 328.532 | 126.639 | 78.148 | 56.357 | 43.975 | 35.99 | 30.412 | 26.297 | 23.134 | 20.629 |

AME20-12SCJZ

| Trim down % | 1 | 2 | 3 | 4 | 5 | 6 | 7 | 8 | 9 | 10 |
|---|---|---|---|---|---|---|---|---|---|---|
| Vout (VDC) | 11.88 | 11.76 | 11.64 | 11.52 | 11.4 | 11.28 | 11.16 | 11.04 | 10.92 | 10.8 |
| Rt down (KΩ) | 183.233 | 111.59 | 79.474 | 61.246 | 49.499 | 41.299 | 35.249 | 30.602 | 26.921 | 23.933 |
| Trim up % | 1 | 2 | 3 | 4 | 5 | 6 | 7 | 8 | 9 | 10 |
| Vout (VDC) | 12.12 | 12.24 | 12.36 | 12.48 | 12.6 | 12.72 | 12.84 | 12.96 | 13.08 | 13.2 |
| Rt up (KΩ) | 211.778 | 57.03 | 32.596 | 22.642 | 17.238 | 13.845 | 11.516 | 9.819 | 8.527 | 7.511 |

AME20-15SCJZ

| Trim down % | 1 | 2 | 3 | 4 | 5 | 6 | 7 | 8 | 9 | 10 |
|---|---|---|---|---|---|---|---|---|---|---|
| Vout (VDC) | 14.85 | 14.7 | 14.55 | 14.4 | 14.25 | 14.1 | 13.95 | 13.8 | 13.65 | 13.5 |
| Rt down (KΩ) | 616.5 | 304 | 199.833 | 147.75 | 116.5 | 95.667 | 80.786 | 69.625 | 60.944 | 54 |
| Trim up % | 1 | 2 | 3 | 4 | 5 | 6 | 7 | 8 | 9 | 10 |
| Vout (VDC) | 15.15 | 15.3 | 15.45 | 15.6 | 15.75 | 15.9 | 16.05 | 16.2 | 16.35 | 16.5 |
| Rt up (KΩ) | 124 | 61.5 | 40.667 | 30.25 | 24 | 19.833 | 16.857 | 14.625 | 12.889 | 11.5 |

AME20-24SCJZ

| Trim down % | 1 | 2 | 3 | 4 | 5 | 6 | 7 | 8 | 9 | 10 |
|---|---|---|---|---|---|---|---|---|---|---|
| Vout (VDC) | 23.76 | 23.52 | 23.28 | 23.04 | 22.8 | 22.56 | 22.32 | 22.08 | 21.84 | 21.6 |
| Rt down (KΩ) | 471.081 | 287.942 | 205.845 | 159.249 | 129.221 | 108.258 | 92.793 | 80.914 | 71.504 | 63.865 |
| Trim up % | 1 | 2 | 3 | 4 | 5 | 6 | 7 | 8 | 9 | 10 |
| Vout (VDC) | 24.24 | 24.48 | 24.72 | 24.96 | 25.2 | 25.44 | 25.68 | 25.92 | 26.16 | 26.4 |
| Rt up (KΩ) | 239.556 | 64.606 | 36.982 | 25.728 | 19.619 | 15.783 | 13.15 | 11.232 | 9.771 | 8.622 |

AME20-48SCJZ

| Trim down % | 1 | 2 | 3 | 4 | 5 | 6 | 7 | 8 | 9 | 10 |
|---|---|---|---|---|---|---|---|---|---|---|
| Vout (VDC) | 47.52 | 47.04 | 46.56 | 46.08 | 45.6 | 45.12 | 44.64 | 44.16 | 43.68 | 43.2 |
| Rt down (KΩ) | 5501.011 | 2921.325 | 1974.775 | 1483.386 | 1182.489 | 979.298 | 832.871 | 722.336 | 635.938 | 566.549 |
| Trim up % | 1 | 2 | 3 | 4 | 5 | 6 | 7 | 8 | 9 | 10 |
| Vout (VDC) | 48.48 | 48.96 | 49.44 | 49.92 | 50.4 | 50.88 | 51.36 | 51.84 | 52.32 | 52.8 |
| Rt up (KΩ) | 420.217 | 191.396 | 123.671 | 91.211 | 72.163 | 59.636 | 50.773 | 44.17 | 39.06 | 34.99 |

**NOTE: 1.** Datasheets are updated as needed and as such, specifications are subject to change without notice. Once printed or downloaded, datasheets are no longer controlled by Aimtec; refer to www.aimtec.com for the most current product specifications. **2.** Product labels shown, including safety agency certifications on labels, may vary based on the date manufactured. **3.** Mechanical drawings and specifications are for reference only. **4.** All specifications are measured at an ambient temperature of 25°C, humidity<75%, nominal input voltage and at rated output load unless otherwise specified. **5.** Aimtec may not have conducted destructive testing or chemical analysis on all internal components and chemicals at the time of publishing this document. CAS numbers and other limited information are considered proprietary and may not be available for release. **6.** This product is not designed for use in critical life support systems, equipment used in hazardous environments, nuclear control systems or other such applications which necessitate specific safety and regulatory standards other the ones listed in this datasheet. **7.** Warranty is in accordance with Aimtec's standard Terms of Sale available at www.aimtec.com.