ADDtek
www.addmtek.com

AMC2596

150 KHz, 3A STEP DOWN VOLTAGE REGULATOR

DESCRIPTION

The AMC2596 series are highly integrated step down voltage regulator capable of driving a 3A load with extremely regulated output voltages over line & load regulation. These devices are available in fixed output voltages of 3.3V. 5V and an adjustable output versions.

These regulators require a minimum number of external components and are simpler to use by an internal frequency compensation and a fixed – frequency oscillator.

By operating a switching frequency of 150KHz, the AMC2596 series require smaller sized filter components. This feature makes the application design more cost effective than lower frequency switch regulators. A standard 5-lead TO-220 package with several different lead bend options, and a 5-lead TO-263 surface mount package is available

The AMC2596 series feature a guaranteed ±4% tolerance of output voltage over input to output load conditions.

FEATURES

- **150 KHz fixed frequency internal oscillator**
- **Guaranteed 3A output load current**
- **Input voltage range up to 40V**
- **3.3V, 5V and adjustable output versions**
- **Adjustable version output voltage range, 1.2V to 37V**
- **±4% max over line and load conditions**
- **Requires only 4 external components**
- **Excellent line and load regulation specifications**
- **Available in TO-220 and TO-263 packages**
- **TTL shutdown capability**
- **Low power standby mode, I_Q typically 80 µA**
- **High efficiency**
- **Thermal shutdown and current limit protection**

APPLICATIONS

- Portable DVD players
- On-card switching regulators
- Simple high-efficiency step-down (buck) regulator

VOLTAGE OPTIONS

AMC2596-3.3	3.3V Fixed
AMC2596-5.0	5.0V Fixed
AMC2596-ADJ	Adjustable Output

PACKAGE PIN OUT

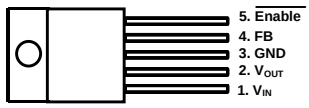

5-Pin Plastic TO-220
(Top View)

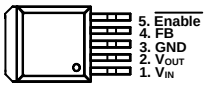

5-Pin Plastic TO-263
Surface Mount
(Top View)

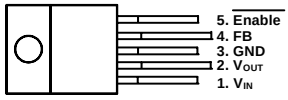

5-Pin Plastic TO-220B
(Top View)

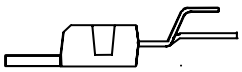

(Side View)

ORDER INFORMATION

T_A (°C)	P	Plastic TO-220 5-pin	PB	Plastic TO-220B 5-pin	DD	Plastic TO-263 5-pin
-40 to 125°C	**AMC2596-ADJPF**		**AMC2596-ADJPBF**		**AMC2596-ADJDDF**	
	AMC2596-X.XPF		**AMC2596-X.XPBF**		**AMC2596-X.XDDF**	

Note： 1. All surface-mount packages are available in Tape & Reel. Append the letter "T" to part number (i.e. AMC2596-X.XDDFT).
2. The letter "F" is marked for Lead Free process.

Copyright © 2006 ADDtek Corp.

TYPICAL APPLICATION

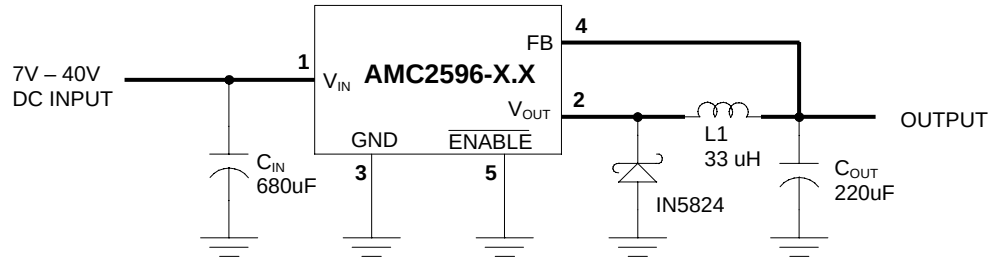

Fixed Output Voltage Version

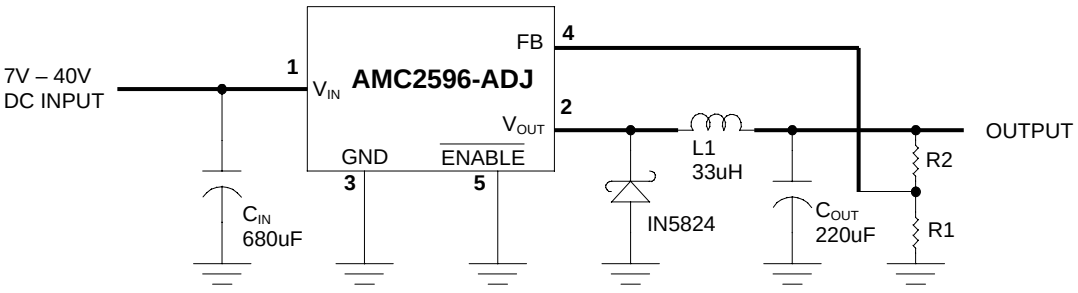

Adjustable Output Voltage Version

Where V_{REF} = 1.23V, R1 between 1K and 5K

ABSOLUTE MAXIMUM RATINGS (Note 1)

Maximum Supply Voltage	45V
ON/OFF Pin Input Voltage	-0.3≦V≦+25V
Feedback Pin Voltage	-0.3≦V≦+25V
Output Voltage to Ground (Steady State)	-1V
Power dissipation	Internally limited
Storage Temperature Range	-65°C to +150°C
ESD Susceptibility --- Human Body Model (Note 2)	2KV
Surface Mount Package--- Vapor Phase (60 sec.)	+215°C
--- Infrared (10 sec.)	+245°C
Through Hole Package (Soldering, 10 sec.)	+260°C
Maximum Junction Temperature, Tj	+150°C

Note: Exceeding these ratings could cause damage to the device. All voltages are with respect to Ground.
Currents are positive into, negative out of the specified terminal.

Copyright © 2006 ADDtek Corp.

THERMAL DATA

P, PB, DD PACKAGE:	
Thermal Resistance-Junction to Tab, θ_{JT}	3.0°C /W
Thermal Resistance-Junction to Ambient, θ_{JA}	45°C /W
Junction Temperature Calculation: $T_J = T_A + (P_D \times \theta_{JA})$. The θ_{JA} numbers are guidelines for the thermal performance of the device/pc-board system. All of the above assume no ambient airflow.	

BLOCK DIAGRAM

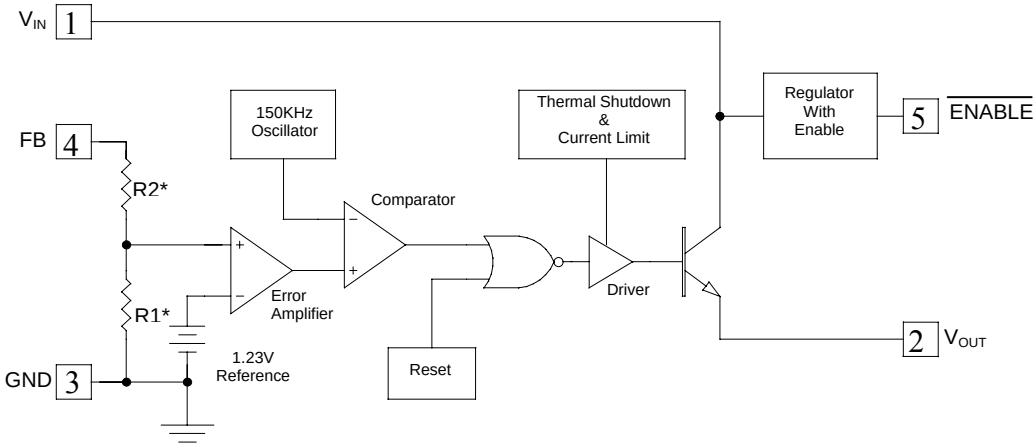

V_{OUT} = 3.3V : R2/R1 = 1.7
V_{OUT} = 5.0V : R2/R1 = 3.1
V_{OUT} = Adjustable : R2 = 0, R1 = Open

RECOMMENDED OPERATING CONDITIONS

Temperature Range	-40°C≦T_J≦+125°C
Supply Voltage	4.5V to 40V

ELECTRICAL CHARACTERISTICS

Unless otherwise specified, these specifications apply V_{IN} = 12V, I_{LOAD} = 0.5A and the operating ambient temperatures T_J = 25°C.

Parameter		Symbol	Conditions	Min	Typ	Max	Units
Output Voltage	AMC2596-3.3	V_{OUT}	4.75V ≤ V_{IN} ≤ 40V, 0.2A ≤ I_{LOAD} ≤ 3A	3.168	3.3	3.342	V
Efficiency		η	V_{IN} = 12V, I_{LOAD} = 3A (Note 3)		73		%
Output Voltage	AMC2596-5.0	V_{OUT}	7V ≤ V_{IN} ≤ 40V, 0.2A ≤ I_{LOAD} ≤ 3A	4.800	5.0	5.200	V
Efficiency		η	V_{IN} = 12V, I_{LOAD} = 3A (Note 3)		80		%
Feedback Voltage	AMC2596-ADJ	V_{FB}	4.5V ≤ V_{IN} ≤ 40V, 0.2A ≤ I_{LOAD} ≤ 3A	1.193	1.230	1.267	V
Efficiency		η	V_{IN} = 12V, I_{LOAD} = 3A (Note 3)		73		%
Feedback Bias Current		Ib	Adjustable Version Only, V_{FB} =1.3V		10	50	nA
Oscillator Frequency		f_{OSC}	(Note 4)	127	150	173	KHz
Saturation Voltage		V_{SAT}	I_{OUT} = 3A (Note 5,6)		1.16	1.4	V
Max Duty Cycle (ON)		DC	(Note 8,9)		100		%
Min Duty Cycle (OFF)					0		
Current Limit		I_{LIMIT}	Peak Current (Note 5,6)	3.6	4.5	6.9	A
Output Leakage Current		I_{LEAK}	Output = 0V (Note 5,7)		2	50	μA
			Output = -1V (Note 8)			30	mA
Quiescent Current		I_Q	(Note 9)		5	10	mA
Standby Current		I_{STBY}	ENABLE pin=5V (OFF) (Note 8)		80	200	μA
ENABLE Pin Threshold Voltage		V_{IH}	Low(Regulator ON)			0.6	V
		V_{IL}	High(Regulator OFF)	2.0			
ENABLE Pin Input Current		I_H	V_{LOGIC}=2.5V(Regulator OFF)		5	15	μA
		I_L	V_{LOGIC}=0.5V(Regulator OFF)		0.02	5	μA

Note 1：Absolute Maximum Ratings indicate limits beyond which damage to the device may occur. Operating Ratings indicate conditions for which the device is intended to be functional, but do not guarantee specific performance limits. For guaranteed specifications and test conditions, see the Electrical Characteristics.

Note 2：The human body model is a 100 pF capacitor discharged through a 1.5K resister into each pin.

Note 3：External components such as the catch diode, inductor, input and output capacitors, and voltage programming resistors can affect switching regulator system performance. When the AMC2596 is used as shown in the Figure 1 test circuit, system performance will be as shown in system parameters section of Electrical Characteristics.

Note 4：The switching frequency is reduced when the second stage current limit is activated. The amount of reduction is determined by the severity of current over-load.

Note 5：No diode, inductor or capacitor connected to output pin.

Note 6：Feedback pin removed from output and connected to 0V to force the output transistor switch ON.

Note 7：Feedback pin removed from output and connected to 12V for the 3.3V, 5V, and the ADJ. version, and 15Vfor the 12V version, to force the output transistor switch OFF.

Note 8：V_{IN}＝40V

Copyright © 2006 ADDtek Corp.

CHARACTERIZATION CURVES

Typical application circuit, T_J=25°C, unless otherwise specified.

Line Regulation

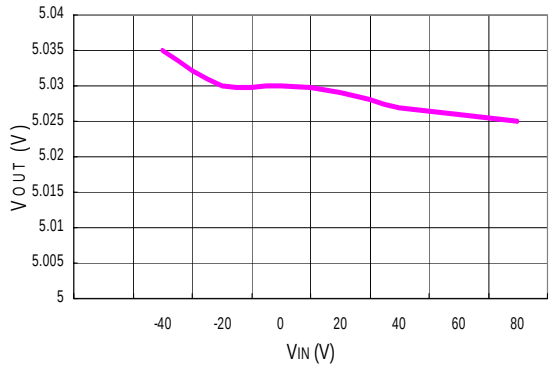

Output Voltage vs. Temperature

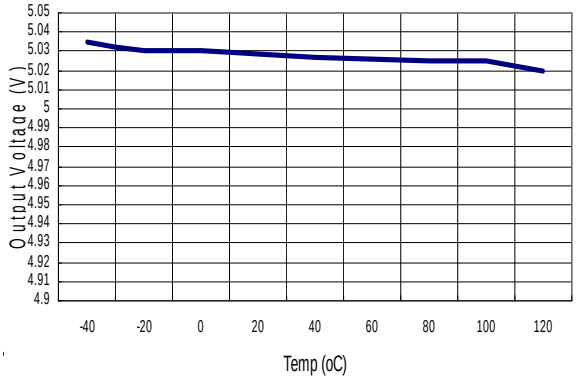

Saturation Voltage vs. Load Current

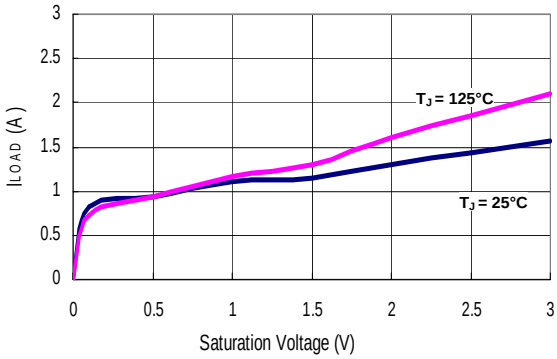

Quiescent Current vs. Input Voltage

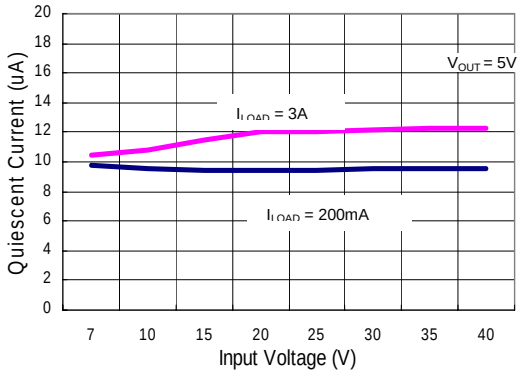

Standby Current vs. Temperature

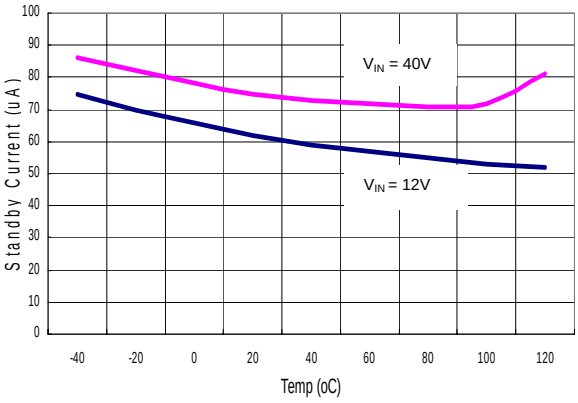

Dropout Voltage vs. Temperature

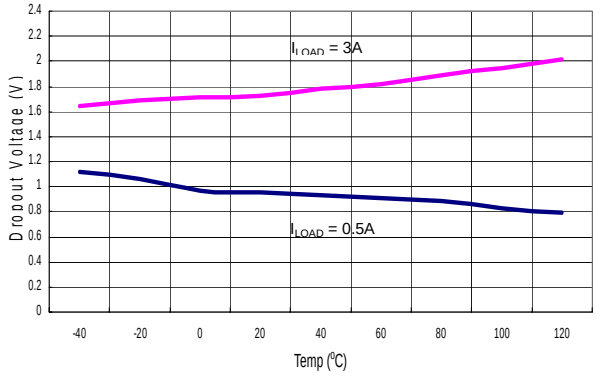

Copyright © 2006 ADDtek Corp.

CHARACTERIZATION CURVES (continued)

Typical application circuit, T_J=25°C, unless otherwise specified.

Load Transient Response

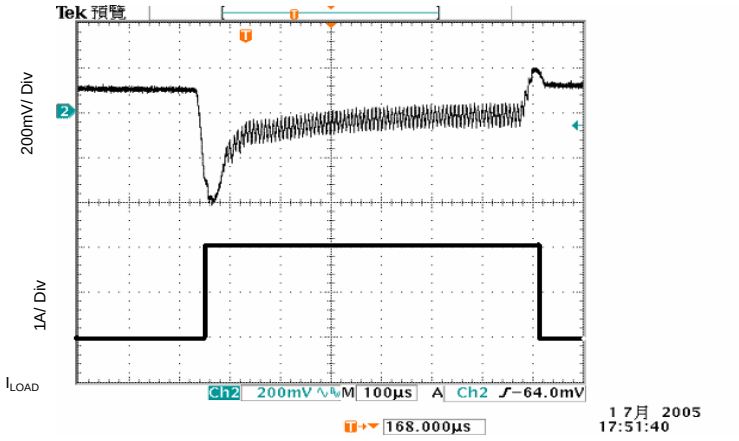

Time:100µs/ Div

APPLICATION INFORMATION

Input Capacitors (C_{IN})

It is required that V_{IN} must be bypassed with at least a 100µF electrolytic capacitor for stability. Also, it is strongly recommended the capacitor's leads must be dept short, and located near the regulator as possible.

For low operating temperature range, for example, below -25°C, the input capacitor value may need to be larger. This is due to the reason that the capacitance value of electrolytic capacitors decreases and the ESR increases with lower temperatures and age. Paralleling a ceramic or solid tantalum capacitor will increase the regulator stability at cold temperatures.

Output Capacitors (C_{OUT})

An output capacitor is also required to filter the output voltage and is needed for loop stability. The capacitor should be located near the AMC2596 using short PC board traces. Low ESR types capacitors are recommended for low output ripple voltage and good stability. Generally, low value or low voltage (less than 12V) electrolytic capacitors usually have higher ESR numbers. For example, the lower capacitor values (220µF–1000µF) will yield typically 50 mV to 150 mV of output ripple voltage, while larger-value capacitors will reduce the ripple to approximately 20 mV to 50 mV.

The amount of output ripple voltage is primarily a function of the ESR (Equivalent Series Resistance) of the output capacitor and the amplitude of the inductor ripple current (ΔI_{IND}).

Output Ripple Voltage = (ΔI_{IND}) × (ESR of C_{OUT})

Some capacitors called "high-frequency," "low-inductance," or "low-ESR." are recommended to use to further reduce the output ripple voltage to 10 mV or 20 mV. However, very low ESR capacitors, such as Tantalum capacitors, should be carefully evaluated.

Output Voltage Ripple and Transients

The output ripple voltage is due mainly to the inductor sawtooth ripple current multiplied by the ESR of the output capacitor.

The output voltage of a switching power supply will contain a sawtooth ripple voltage at the switcher frequency, typically about 1% of the output voltage, and may also contain short voltage spikes at the peaks of the sawtooth waveform.

Due to the fast switching action, and the parasitic inductance of the output filter capacitor, there is voltage spikes presenting at the peaks of the sawtooth waveform. Cautions must be taken for stray capacitance, wiring inductance, and even the scope probes used for transients evaluation. To minimize these voltage spikes, shortening the lead length and PCB traces is always the first thought. Further more, an additional small LC filter (3µH & 180µF) (as shown in Figure 3) will possibly provide a 10X reduction in output ripple voltage and transients.

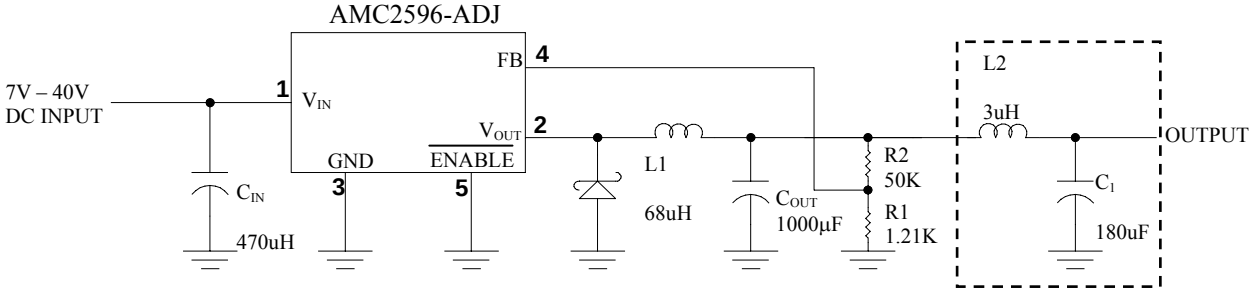

Figure 3. LC Filter for Low Output Ripple

APPLICATION INFORMATION (continued)

Inductor Selection

The AMC2596 can be used for either continuous or discontinuous modes of operation. Each mode has distinctively different operating characteristics, which can affect the regulator performance and requirements.

With relatively heavy load currents, the circuit operates in the continuous mode (inductor current always flowing), but under light load conditions, the circuit will be forced to the discontinuous mode (inductor current falls to zero for a period of time). For light loads (less than approximately 300 mA) it may be desirable to operate the regulator in the discontinuous mode, primarily because of the lower inductor values required for the discontinuous mode.

Inductors are available in different styles such as pot core, toroid, E-frame, bobbin core, et., as well as different core materials, such as ferrites and powdered iron. The least expensive, the bobbin core type, consists of wire wrapped on a ferrite rod core. This type of construction makes for an inexpensive inductor, but since the magnetic flux is not completely contained within the core, it generates more electromagnetic interference (EMI). This EMI can cause problems in sensitive circuits, or can give incorrect scope readings because of induced voltages in the scope probe.

An inductor should not be operated beyond its maximum rated current because it may saturate. When an inductor begins to saturate, the inductance decreases rapidly and the inductor begins to look mainly resistive (the DC resistance of the winding). This will cause the switch current to rise very rapidly. Different inductor types have different saturation characteristics, and this should be well considered when selecting as inductor.

Catch Diode

This diode is required to provide a return path for the inductor current when the switch is off. It should be located close to the AMC2596 using short leads and short printed circuit traces as possible. To satisfy the need of fast switching speed and low forward voltage drop, Schottky diodes are widely used to provide the best efficiency, especially in low output voltage switching regulators (less than 5V). Besides, fast-Recovery, high-efficiency, or ultra-fast recovery diodes are also suitable. But some types with an abrupt turn-off characteristic may cause instability and EMI problems. A fast-recovery diode with soft recovery characteristics is a better choice.

Feedback Connection

For fixed output voltage version, the FB (feedback) pin must be connected to V_{OUT}. For the adjustable version, it is important to place the output voltage ratio resistors near AMC2596 as possible in order to minimize the noise introduction.

$\overline{\text{ENABLE}}$

It is required that the $\overline{\text{ENABLE}}$ must **not** be left open. For normal operation, connect this pin to a “LOW” voltage (typically, below 1.6V). On the other hand, for standby mode, connect this pin with a “HIGH” voltage. This pin can be safely pulled up to $+V_{IN}$ without a resistor in series with it.

Grounding

To maintain output voltage stability, the power ground connections must be low-impedance. For the 5-lead TO-220 and TO-263 style package, both the tab and pin 3 are ground and either connection may be used.

Copyright © 2006 ADDtek Corp.

Heat Sink and Thermal Consideration

Although the AMC2596 requires only a small heat sink for most cases, the following thermal consideration is important for all operation. With the package thermal resistances θ_{JA} and θ_{JC}, total power dissipation can be estimated as follows:

$P_D = (V_{IN} \times I_Q)+(V_{OUT} / V_{IN})(I_{LOAD} \times V_{SAT})$;

When no heat sink is used, the junction temperature rise can be determined by the following:

$\Delta T_J = P_D \times \theta_{JA}$;

With the ambient temperature, the actual junction temperature will be:

$T_J = \Delta T_J + T_A$;

If the actual operating junction temperature is out of the safe operating junction temperature (typically 125°C), then a heat sink is required. When using a heat sink, the junction temperature rise will be reduced by the following:

$\Delta T_J = P_D \times (\theta_{JC} + \theta_{interface} + \theta_{Heat\ sink})$;

As one can see from the above, it is important to choose an heat sink with adequate size and thermal resistance, such that to maintain the regulator's junction temperature below the maximum operating temperature.

Copyright © 2006 ADDtek Corp.

PACKAGE

Symbol

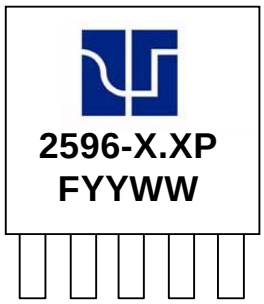

X.X : Output Voltage Options
3.3 = 3.3V, 5.0 = 5.0V, ADJ= Adjustable
P : Package
P= TO-220, PB= TO-220B, DD= TO-263
YYWW: Date Code
YY = Year, WW = Weeks
Example: 0412 means Year 2004, week 12
F: Lead Free

5-Pin Plastic TO-220 (P)

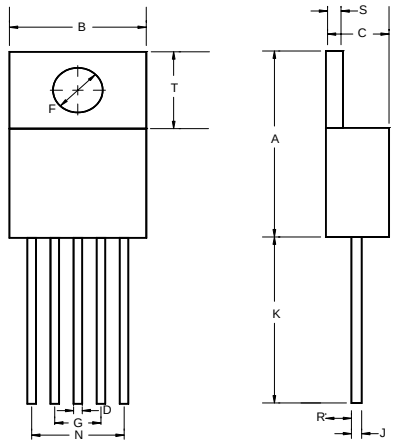

	INCHES			MILLIMETERS		
	MIN	TYP	MAX	MIN	TYP	MAX
A	0.560	-	0.650	14.23	-	16.51
B	0.380	-	0.420	9.66	-	10.66
C	0.140	-	0.190	3.56	-	4.82
D	0.018	-	0.035	0.46	-	0.89
F	0.140	-	0.160	3.56	-	4.06
G	0.134	-	-	3.40	-	-
J	0.012	-	0.045	0.31	-	1.14
K	0.500	-	0.580	12.70	-	14.73
N	0.268 TYP			6.80 TYP		
R	0.080	-	0.115	2.04	-	2.92
S	0.045	-	0.055	1.14	-	1.39
T	0.230	-	0.270	5.85	-	6.85

5-Pin Surface Mount TO-263 (DD)

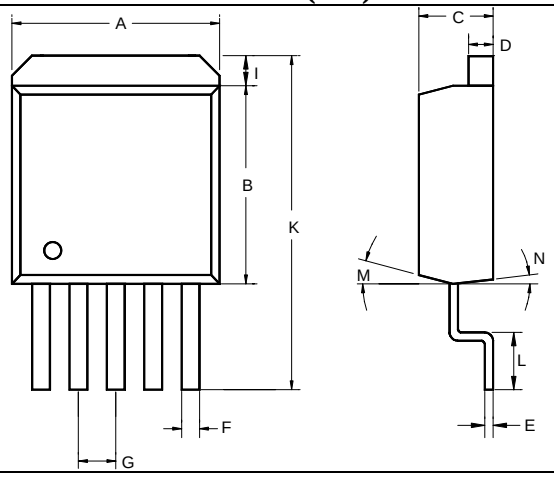

	INCHES			MILLIMETERS		
	MIN	TYP	MAX	MIN	TYP	MAX
A	0.395	-	0.420	10.03	-	10.67
B	0.325	-	0.361	8.25	-	9.17
C	0.171	-	0.181	4.34	-	4.59
D	0.045	-	0.055	1.14	-	1.40
E	0.013	-	0.017	0.330	-	0.432
F	0.029	-	0.035	0.737	-	0.889
G	0.062	-	0.072	1.57	-	1.83
I	-	-	0.065	-	-	1.65
K	0.575		0.635	14.60		16.13
L	0.090		0.110	2.29		2.79
M	7°			7°		
N	3°			3°		

Copyright © 2006 ADDtek Corp.

5-Pin Plastic TO-220B (PB)

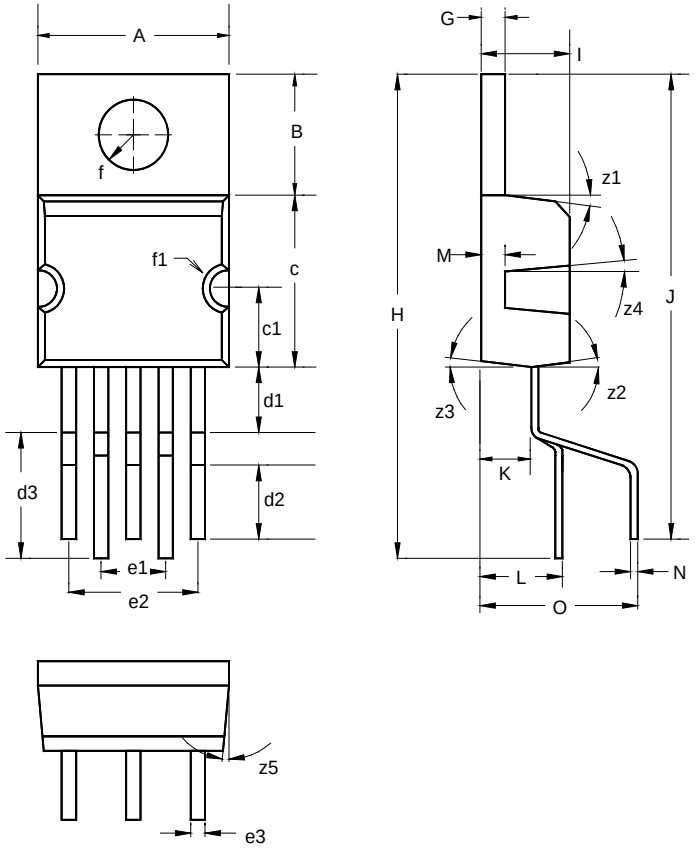

	INCHES			MILLIMETERS		
	MIN	TYP	MAX	MIN	TYP	MAX
A	0.380	0.401	0.420	9.65	10.20	10.65
B		0.248			6.30	
c	0.348	0.358	0.368	8.85	9.10	9.35
c1		0.167			4.25	
d1		0.138			3.50	
d2		0.154			3.90	
d3		0.213			5.40	
e1		0.134			3.40	
e2		0.268			6.80	
e3		0.032			0.81	
f		0.151			3.84	
f1		0.039			1.00	
G	0.048	0.05	0.052	1.22	1.27	1.32
H		0.996			25.30	
I	0.175	0.180	0.185	4.44	4.57	4.70
J		0.965			24.50	
K		0.105			2.67	
L	0.164	0.173	0.182	4.17	4.40	4.63
M		0.05			1.27	
N	0.013	0.015	0.025	0.33	0.381	0.63
O	0.322	0.331	0.340	8.17	8.40	8.63
z1		7°			7°	
z2		7°			7°	
z3		7°			7°	
z4		5°			5°	
Z5		5°			5°	

Copyright © 2006 ADDtek Corp.

IMPORTANT NOTICE

ADDtek reserves the right to make changes to its products or to discontinue any integrated circuit product or service without notice, and advises its customers to obtain the latest version of relevant information to verify, before placing orders, that the information being relied on is current.

A few applications using integrated circuit products may involve potential risks of death, personal injury, or severe property or environmental damage. ADDtek integrated circuit products are not designed, intended, authorized, or warranted to be suitable for use in life-support applications, devices or systems or other critical applications. Use of ADDtek products in such applications is understood to be fully at the risk of the customer. In order to minimize risks associated with the customer's applications, the customer should provide adequate design and operating safeguards.

ADDtek assumes to no liability to customer product design or application support. ADDtek warrants the performance of its products to the specifications applicable at the time of sale.

ADDtek Corp.
9F, No. 20, Sec. 3, Bade Rd., Taipei, Taiwan, 105
TEL: 2-25700299
FAX: 2-25700196