Preliminary

Am95C95

Magnetic Disk Controller

Advanced Micro Devices

DISTINCTIVE CHARACTERISTICS

- Handles ESMD/ESDI and ST-506 Magnetic Disk Data Format
- User programmable disk formats
- On-chip Reed-Solomon Error Detection and Correction
- Minimal Rotational Latency Read/Write Operations
- 1:1 Sector Interleave Read/Write Operations
- 20 MHz System Clock
- Up to 32 MHz NRZ Serial Disk Data
- High Level Command Set
- Supports Intelligent SCSI-type Interfaces
- On-chip Buffer Management
- Direct support of DRAM Buffer (up to 4 MBytes)

GENERAL DESCRIPTION

The Magnetic Disk Data Controller (MDC) is a highly programmable magnetic disk data format controller designed for use in both standard and custom applications. The device has been optimized for applications utilizing an embedded SCSI disk data manager, but it easily supports other intelligent proprietary interfaces as well.

As an embedded controller, the MDC handles the timing of all disk read/write control signals, the transfer of NRZ data between the disk and buffer RAM, and the transfer of disk data between a parallel host interface and buffer RAM. The MDC performs all buffer management and arbitration associated with this transfer of data while maintaining data integrity through on-chip error detection and correction logic. In addition, the MDC can perform advanced data mapping operations during data transfer, simplifying the task of cache management. The MDC can handle up to 4 Mbytes of data buffer Dynamic RAM directly, including address multiplexing and refresh, with no external logic.

The MDC acts as an intelligent peripheral to a microprocessor or microcontroller. In an embedded SCSI disk controller application, the control CPU (referred to in this document as simply the CPU), interprets all SCSI commands and controls disk head positioning and head selection, while the MDC handles all data transfers. The CPU sets up and initiates MDC operation by modifying as few as 6 MDC registers. MDC registers are directly addressable, and can be read or written directly with either an iAPX multiplexed address/data bus, or a Motorola 68xxx type non-multiplexed bus interface.

The on-chip Reed-Solomon Error Detection And Correction (EDAC) logic enables the MDC to perform on-the-fly error correction during disk read operations while maintaining a zero sector interleave on the disk. The MDC performs such error correction without CPU intervention. The Reed-Solomon logic supports 2, 3 or 5 EDAC interleaves within a sector data field and either single- or double-burst correction capability.

Publication # 13080 Rev. A Amendment /0
Issue Date: September 1989

INTERNAL BLOCK DIAGRAM

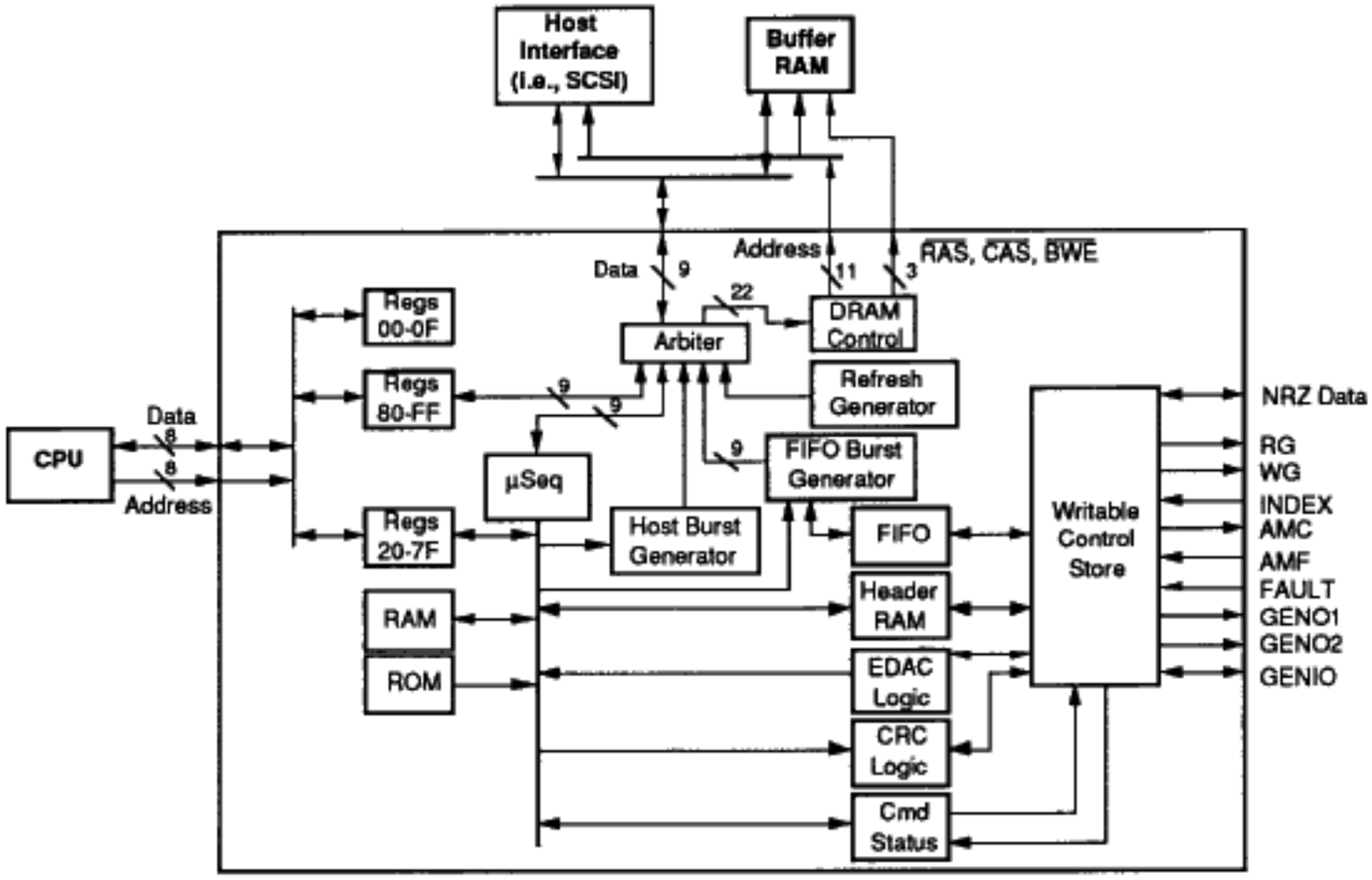

10935–001A

SYSTEM APPLICATION

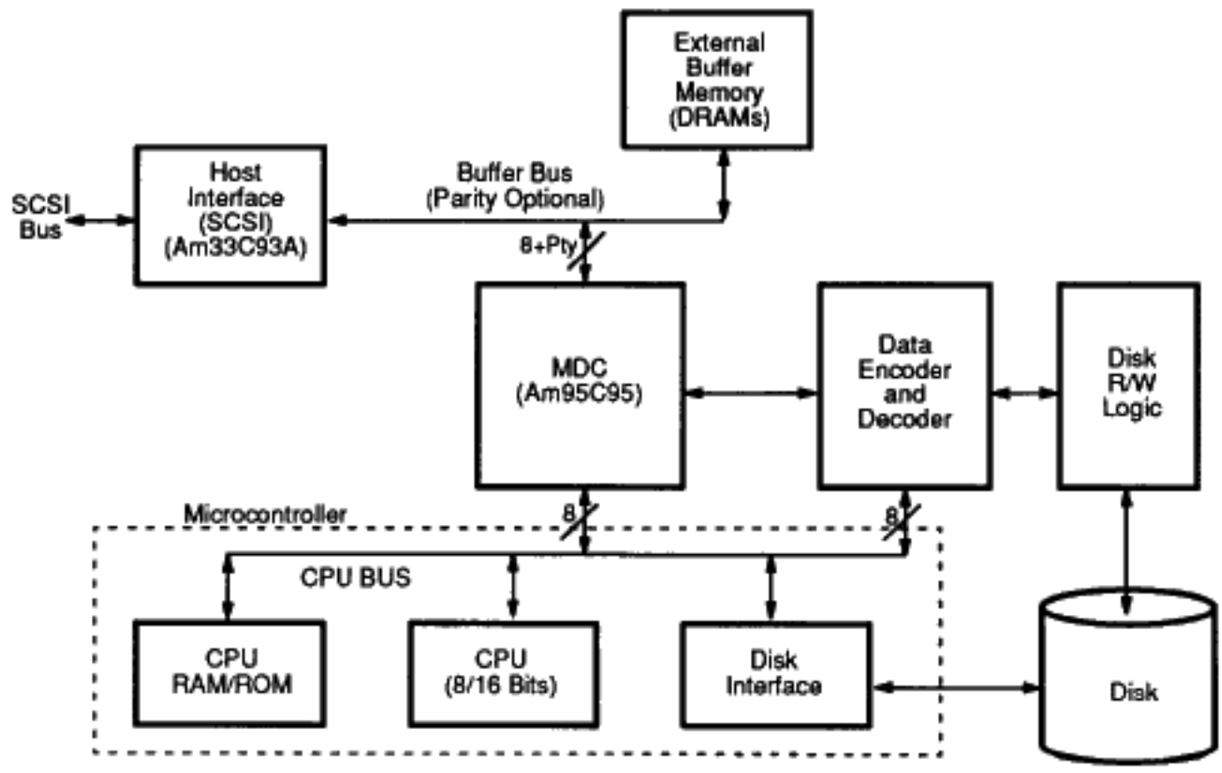

10935–002A

RELATED AMD PRODUCTS

Part Number	Description
Am33C93A	SCSI Controller
Am53C80	SCSI Controller
Am805x	Microcontroller
Am80C521	CMOS Microcontroller
Am80188	Microprocessor
Am95C94	Advanced Burst Error Processor

CONNECTION DIAGRAM

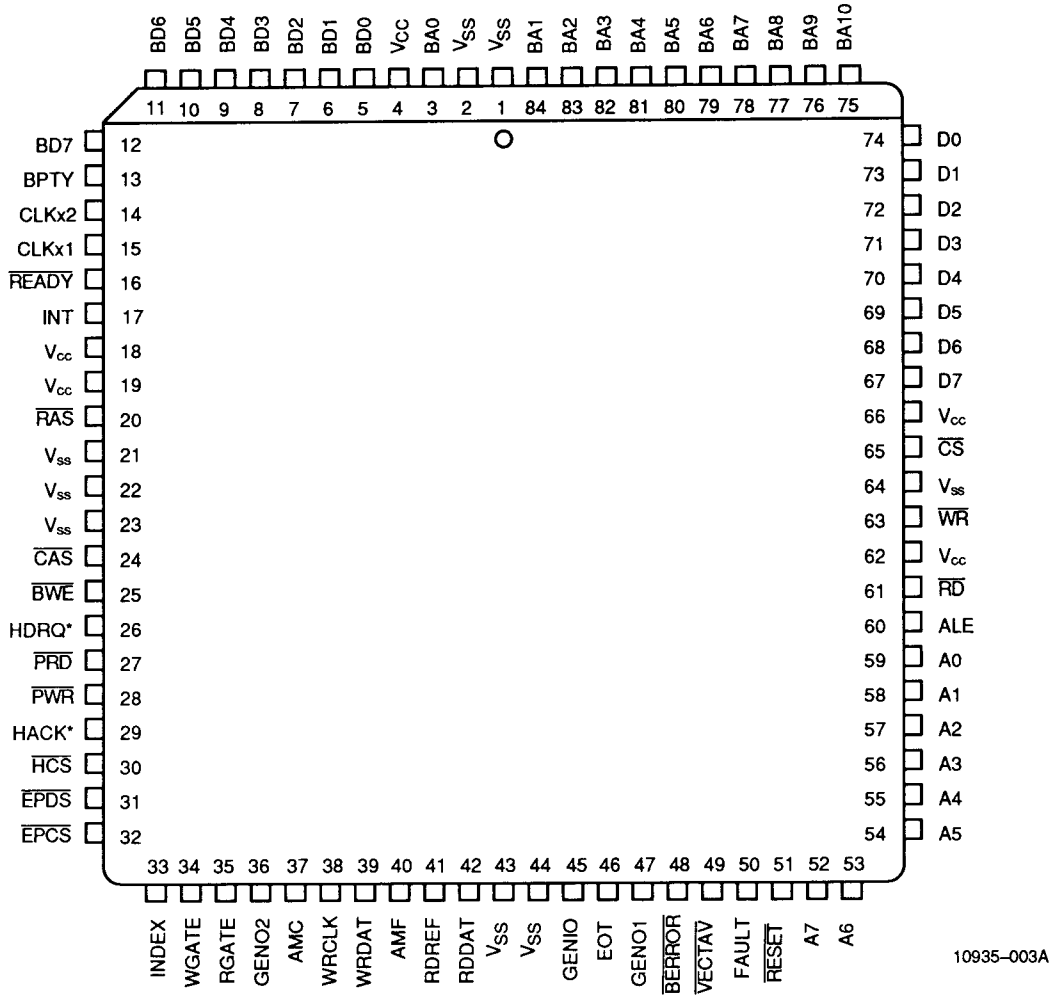

10935-003A

* These pins have programmable polarity.

LOGIC DIAGRAM

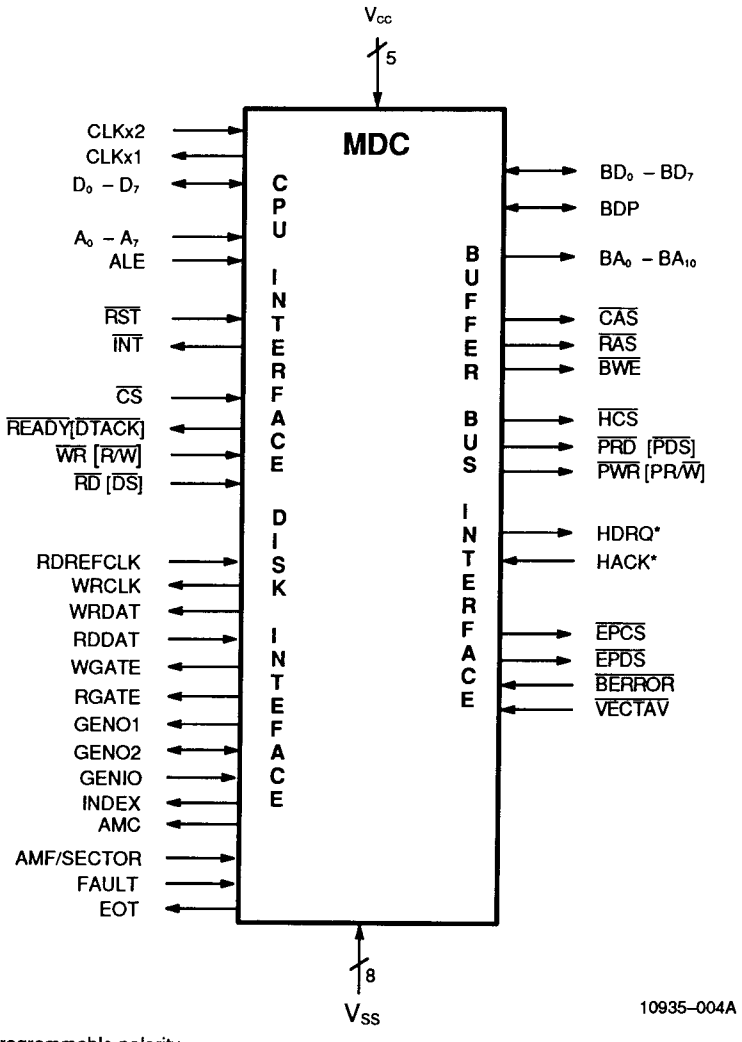

* These pins have programmable polarity.

ORDERING INFORMATION

Standard Products

AMD standard products are available in several packages and operating ranges. The ordering number (Valid Combination) is formed by a combination of:

a. Device Number
b. Speed Option (if applicable)
c. Package Type
d. Temperature Range
e. Optional Processing

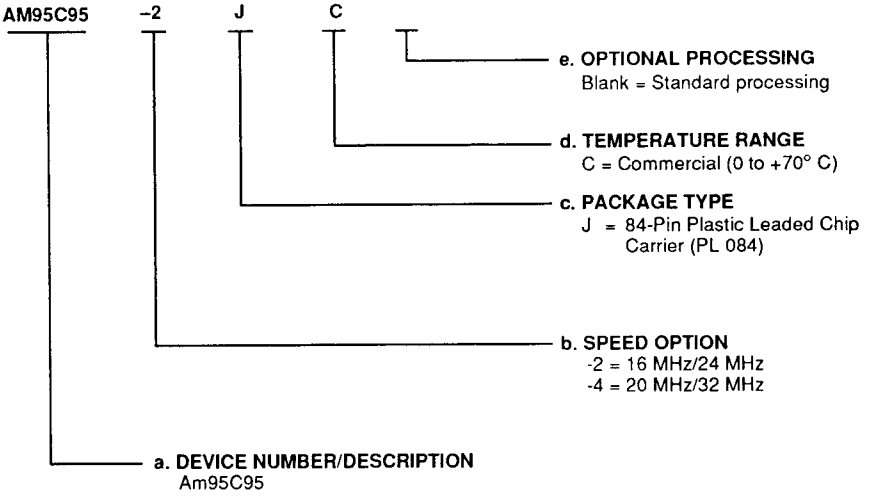

Valid Combinations	
AM95C95–2JC	JC
AM95C95–4JC	

Valid Combinations

Valid Combinations list configurations planned to be supported in volume for this device. Consult the local AMD sales office to confirm availability of specific valid combinations, to check on newly released combinations, and to obtain additional data on AMD's standard military grade products.

Sales Offices

North American

ALABAMA		(205) 882-9122
ARIZONA		(602) 242-4400
CALIFORNIA,		
Culver City		(213) 645-1524
Newport Beach		(714) 752-6262
Roseville		(916) 786-6700
San Diego		(619) 560-7030
San Jose		(408) 452-0500
Woodland Hills		(818) 992-4155
CANADA, Ontario,		
Kanata		(613) 592-0060
Willowdale		(416) 224-5193
COLORADO		(303) 741-2900
CONNECTICUT		(203) 264-7800
FLORIDA,		
Clearwater		(813) 530-9971
Ft. Lauderdale		(305) 776-2001
Orlando (Casselberry)		(407) 830-8100
GEORGIA		(404) 449-7920
ILLINOIS,		
Chicago (Itasca)		(312) 773-4422
Naperville		(312) 505-9517
KANSAS		(913) 451-3115
MARYLAND		(301) 796-9310
MASSACHUSETTS		(617) 273-3970
MICHIGAN		(313) 347-1522
MINNESOTA		(612) 938-0001
NEW JERSEY,		
Cherry Hill		(609) 662-2900
Parsippany		(201) 299-0002
NEW YORK,		
Liverpool		(315) 457-5400
Poughkeepsie		(914) 471-8180
Rochester		(716) 272-9020
NORTH CAROLINA		(919) 878-8111
OHIO,		
Columbus (Westerville)		(614) 891-6455
Dayton		(513) 439-0470
OREGON		(503) 245-0080
PENNSYLVANIA		(215) 398-8006
SOUTH CAROLINA		(803) 772-6760
TEXAS,		
Austin		(512) 346-7830
Dallas		(214) 934-9099
Houston		(713) 785-9001

International

BELGIUM, Bruxelles	TEL	(02) 771-91-42
	FAX	(02) 762-37-12
	TLX	846-61028
FRANCE, Paris	TEL	(1) 49-75-10-10
	FAX	(1) 49-75-10-13
	TLX	263282F
WEST GERMANY,		
Hannover area	TEL	(0511) 736085
	FAX	(0511) 721254
	TLX	922850
München	TEL	(089) 4114-0
	FAX	(089) 406490
	TLX	523883
Stuttgart	TEL	(0711) 62 33 77
	FAX	(0711) 625187
	TLX	721882
HONG KONG,	TEL	852-5-8654525
Wanchai	FAX	852-5-8654335
	TLX	67955AMDAPHX
ITALY, Milan	TEL	(02) 3390541
		(02) 3533241
	FAX	(02) 3498000
	TLX	843-315286
JAPAN,		
Kanagawa	TEL	462-47-2911
	FAX	462-47-1729
Tokyo	TEL	(03) 345-8241
	FAX	(03) 342-5196
	TLX	J24064AMDTKOJ
Osaka	TEL	06-243-3250
	FAX	06-243-3253

International (Continued)

KOREA, Seoul	TEL	822-784-0030
	FAX	822-784-8014
LATIN AMERICA,		
Ft. Lauderdale	TEL	(305) 484-8600
	FAX	(305) 485-9736
	TLX	5109554261 AMDFTL
NORWAY, Hovik	TEL	(03) 010156
	FAX	(02) 591959
	TLX	79079HBCN
SINGAPORE	TEL	65-3481188
	FAX	65-3480161
	TLX	55650 AMDMMI
SWEDEN,		
Stockholm	TEL	(08) 733 03 50
(Sundbyberg)	FAX	(08) 733 22 85
	TLX	11602
TAIWAN	TEL	886-2-7213393
	FAX	886-2-7723422
	TLX	886-2-7122066
UNITED KINGDOM,		
Manchester area	TEL	(0925) 828008
(Warrington)	FAX	(0925) 827693
	TLX	851-628524
London area	TEL	(0483) 740440
(Woking)	FAX	(0483) 756196
	TLX	851-859103

North American Representatives

CANADA		
Burnaby, B.C.		
DAVETEK MARKETING		(604) 430-3680
Calgary, Alberta		
DAVETEK MARKETING		(403) 291-4984
Kanata, Ontario		
VITEL ELECTRONICS		(613) 592-0060
Mississauga, Ontario		
VITEL ELECTRONICS		(416) 676-9720
Lachine, Quebec		
VITEL ELECTRONICS		(514) 636-5951
IDAHO		
INTERMOUNTAIN TECH MKTG, INC		(208) 888-6071
ILLINOIS		
HEARTLAND TECH MKTG, INC		(312) 577-9222
INDIANA		
Huntington - ELECTRONIC MARKETING CONSULTANTS, INC		(317) 921-3450
Indianapolis - ELECTRONIC MARKETING CONSULTANTS, INC		(317) 921-3450
IOWA		
LORENZ SALES		(319) 377-4666
KANSAS		
Merriam – LORENZ SALES		(913) 384-6556
Wichita – LORENZ SALES		(316) 721-0500
KENTUCKY		
ELECTRONIC MARKETING CONSULTANTS, INC		(317) 921-3452
MICHIGAN		
Birmingham - MIKE RAICK ASSOCIATES		(313) 644-5040
Holland – COM-TEK SALES, INC		(616) 399-7273
Novi – COM-TEK SALES, INC		(313) 344-1409
MISSOURI		
LORENZ SALES		(314) 997-4558
NEBRASKA		
LORENZ SALES		(402) 475-4660
NEW MEXICO		
THORSON DESERT STATES		(505) 293-8555
NEW YORK		
East Syracuse – NYCOM, INC		(315) 437-8343
Woodbury – COMPONENT CONSULTANTS, INC		(516) 364-8020
OHIO		
Centerville – DOLFUSS ROOT & CO		(513) 433-6776
Columbus – DOLFUSS ROOT & CO		(614) 885-4844
Strongsville – DOLFUSS ROOT & CO		(216) 238-0300
PENNSYLVANIA		
DOLFUSS ROOT & CO		(412) 221-4420
PUERTO RICO		
COMP REP ASSOC, INC		(809) 746-6550
UTAH, R^2 MARKETING		(801) 595-0631
WASHINGTON		
ELECTRA TECHNICAL SALES		(206) 821-7442
WISCONSIN		
HEARTLAND TECH MKTG, INC		(414) 792-0920

Advanced Micro Devices reserves the right to make changes in its product without notice in order to improve design or perform characteristics listed in this document are guaranteed by specific tests, guard banding, design and other practices common to t contact your local AMD sales representative. The company assumes no responsibility for the use of any circuits described h

015150

Advanced Micro Devices, Inc. 901 Thompson Place, P.O. Box 3453, Sunnyvale, CA 94088, USA
Tel: (408) 732-2400 • TWX: 910-339-9280 • TELEX: 34-6306 • TOLL FREE: (800) 538-8450
APPLICATIONS HOTLINE TOLL FREE: (800) 222-9323 • (408) 749-5703

© 1989 Advanced Micro Devices, Inc.
8/9/89
Printed in USA