High Dynamic Range Low Noise Amplifier
800 - 1000 MHz

AM50-0003

V2.00

Features

- Low Noise Figure: 1.2 dB
- High Input IP3: +18 dBm at 8 V, 60 mA bias
  +6.5 dBm at 3 V, 20 mA bias
- High Gain: 15 dB
- Single Supply: +3 to +8 VDC
- Low Cost SOIC-8 Plastic Package
- Adjustable current: 20 to 80 mA with external resistor

Description

M/A-COM's AM50-0003 is a high dynamic range, GaAs MMIC, low noise amplifier in a low cost, SOIC 8-lead, surface mount, plastic package. It employs external input matching to obtain optimum noise figure performance and operating frequency flexibility. The AM50-0003 also features flexible biasing to control the current consumption vs. dynamic range trade-off. The AM50-0003 can operate from any supply voltage in the 3 V to 8 V range. Its current can be controlled over a range of 20 mA to 80 mA with an external resistor.

The AM50-0003 is ideally suited for use where low noise figure, high gain, high dynamic range, and low power consumption are required. Typical applications include receiver front ends in AMPS, GSM and ETACS base stations. It is also useful as a gain block, buffer, driver and IF amplifier in both fixed and portable cellular and 900 MHz ISM systems.

The AM50-0003 is fabricated using a low-cost 0.5-micron gate length GaAs process. The process features full passivation for increased performance reliability. The AM50-0003 is 100% RF tested to ensure performance specification compliance.

SO-8

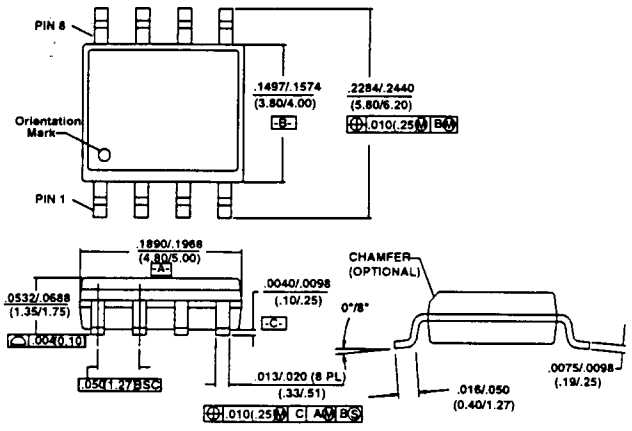

Ordering Information

Part Number	Package
AM50-0003	SOIC 8-Lead Plastic
AM50-0003TR	Forward Tape and Reel*
AM50-0003RTR	Reverse Tape and Reel*
AM50-0003SMB	Designer's Kit

* If specific reel size is required, consult factory for part number assignment.

Electrical Specifications[1]: T_A=+25°C, Z_0 = 50 Ω, F= 900 MHz, P_{IN} = - 30 dBm

Parameter	Test Conditions	Units	Min.	Typ.	Max.
Gain	5 V, 60 mA[2]	dB	13	15	
	3 V, 20 mA	dB	12	13.5	
Noise Figure	5 V, 60 mA[2]	dB		1.20	1.50
	3 V, 20 mA	dB		1.25	1.50
Input VSWR				2.0:1	
Output VSWR				1.5:1	
Output 1 dB Compression	5 V, 60 mA[2]	dBm		16.5	
	3 V, 20 mA	dBm		8.5	
Input IP3	5 V, 60 mA[2]	dBm	12.5	15	
	3 V, 20 mA	dBm	4.0	6.5	
Reverse Isolation		dB		25	

1. See page 3 for performance versus frequency and bias.
2. Using external 15 Ω resistor. See functional block diagram on page 2.

North America: Tel. (800) 366-2266 Fax (800) 618-8883 ♦ Asia/Pacific: Tel. +81 3 3263-8761 Fax +81 3 3263-8769 ♦ Europe: Tel. +44 (1344) 869-595 Fax +44 (1344) 300-020

Absolute Maximum Ratings [1]

Parameter	Absolute Maximum
V_{DD}	+10 VDC
Input Power	+17 dBm
Current [2]	120 mA
Channel Temperature [3]	+150°C
Operating Temperature	-40°C to +85°C
Storage Temperature	-65°C to +150°C

1. Exceeding any one or combination of these limits may cause permanent damage.
2. When pin #2 is used to increase current. (See note 5.)
3. Thermal resistance (θjc) = +88°C/W.

Functional Block Diagram

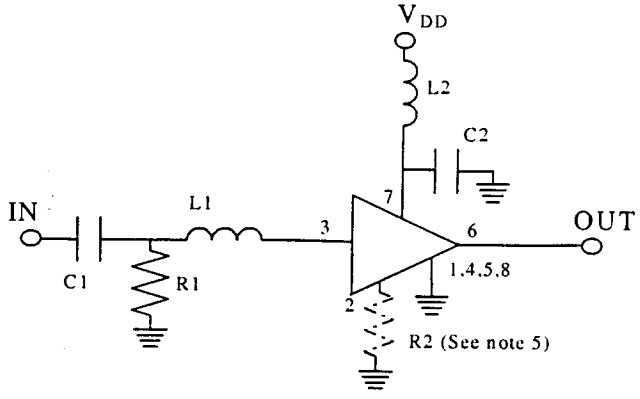

Pin Configuration

Pin No.	Pin Name	Description
1	GND	RF and DC Ground
2	R_{EXT}	External Current Control (optional)
3	IN	RF Input of the amplifier
4	GND	RF and DC Ground
5	GND	RF and DC Ground
6	OUT	RF Output of the amplifier
7	V_{DD}	Positive supply voltage
8	GND	RF and DC Ground

External Circuitry Parts List [4]

Part	Value	Purpose
C1	47 pF	DC Block
C2	470 pF	By-Pass
L1	12 nH	Tuning
L2	12 nH	RF Choke
R1	5.1 kΩ	DC Return
R2	see note 5	Optional current control

4. All external circuitry parts are readily available, low cost surface mount components (.060 in. x .030 in. or .080 in. x .050 in.).
5. Pin 2 allows use of an external resistor to ground for optional, higher current. For 20 mA operation, no resistor is used.
   For I_{DD} ~ 40 mA, R2 = 43 ohms;
   I_{DD} ~ 60 mA, R2 = 15 ohms;
   I_{DD} ~ 80 mA, R2 = 10 ohms.

Recommended PCB Configuration

Layout View

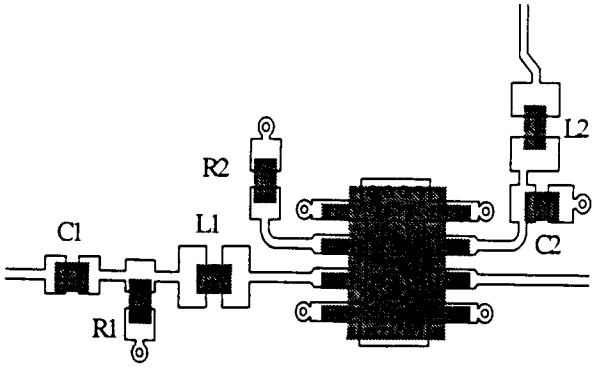

Cross Section View

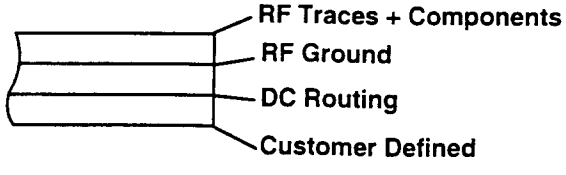

The PCB dielectric between RF traces and RF ground layers should be chosen to reduce RF discontinuities between 50 Ω lines and package pins. M/A-COM recommends an FR-4 dielectric thickness of 0.008" (0.20 mm) yielding a 50 Ω line width of 0.015" (0.38 mm). The recommended RF metalization thickness is 1 ounce copper.

North America: Tel. (800) 366-2266 Fax (800) 618-8883 ♦ Asia/Pacific: Tel. +81 3 3263-8761 Fax +81 3 3263-8769 ♦ Europe: Tel. +44 (1344) 869-595 Fax +44 (1344) 300-020

Typical Performance Data

Test Conditions: T_A= +25°C, Z_0 = 50 Ω, V_{DD} = 5 V, I_{DD} = 60 mA unless otherwise specified.

GAIN vs. FREQUENCY

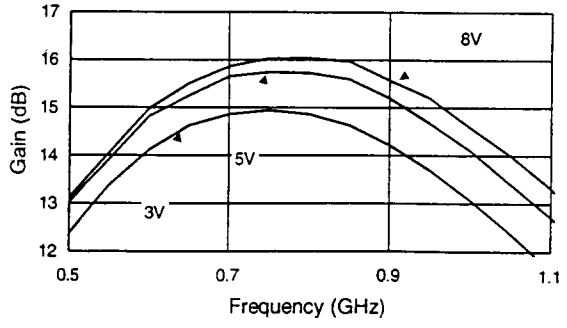

VSWR vs. FREQUENCY

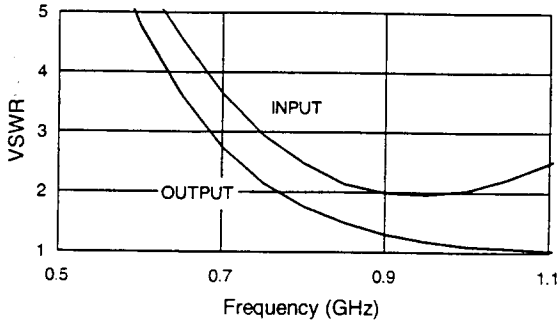

NOISE FIGURE vs. FREQUENCY

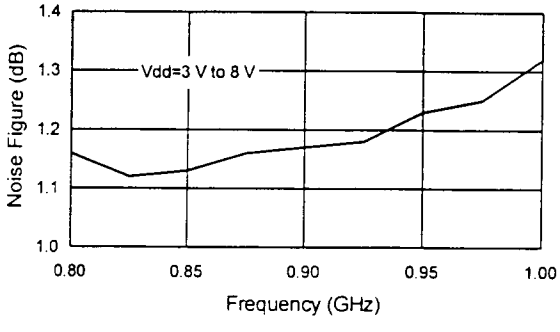

NOISE FIGURE vs. CURRENT, F=900 MHz

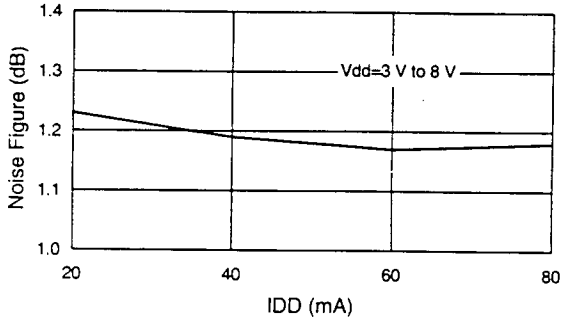

OUTPUT P1dB vs. FREQUENCY

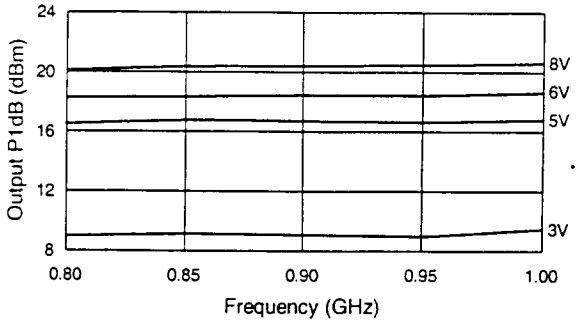

OUTPUT P1dB vs. CURRENT, F=900 MHz

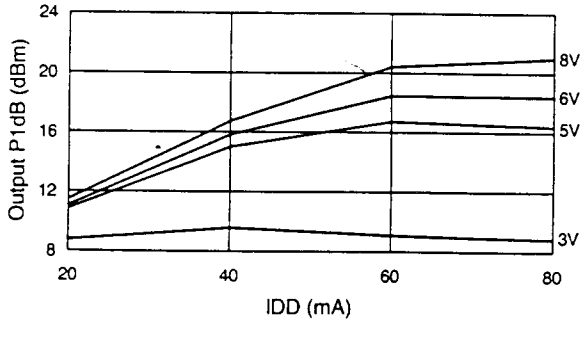

INPUT IP3 vs. FREQUENCY

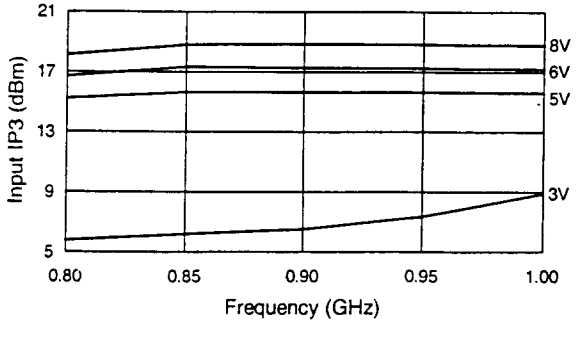

INPUT IP3 vs. CURRENT, F=900 MHz

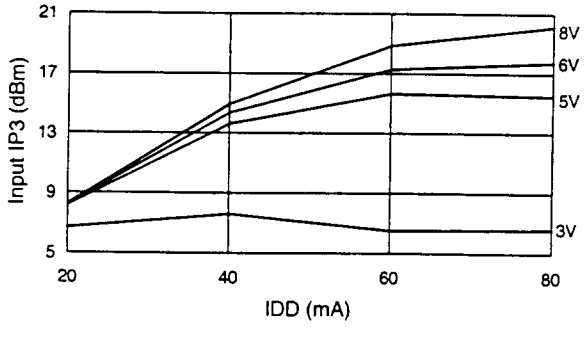

Designer's Kit AM50-0003SMB

The AM50-0003SMB Designer's Kit allows for immediate evaluation of M/A-COM's AM50-0003. The Designer's Kit includes an AM50-0003, an evaluation board, and a floppy disk containing typical performance data and a DXF file of the recommended PCB layout.

The evaluation board consists of the recommended external surface mount circuitry, RF connectors, and a DC multi-pin connector, all mounted to a multi-layer FR-4 PCB. The AM50-0003SMB evaluation PCB is illustrated below with all functional ports labeled.

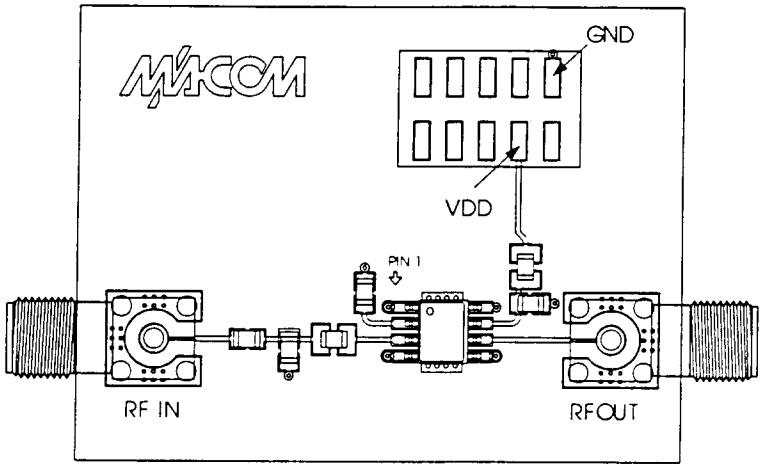

AM50-0003 EVALUATION BOARD

Evaluation PCB + RF Connector Losses

Port Reference	Approximate RF Loss
LNA Input	0.1 dB @ 900 MHz
LNA Output	0.1 dB @ 900 MHz

The DC connector on the Designer's Kit PCB allows convenient DC line access. This is accomplished by of the one or more of the following methods:

1. A mating female multi-pin connector (Newark Electronics Stock # 46F-4658, not included).
2. Wires soldered to the necessary pins (not included).
3. Clip leads (not included).

North America: Tel. (800) 366-2266 Fax (800) 618-8883 ♦ Asia/Pacific: Tel. +81 3 3263-8761 Fax +81 3 3263-8769 ♦ Europe: Tel. +44 (1344) 869-595 Fax +44 (1344) 300-020