Am42DLl6x2D

Data Sheet

July 2003

The following document specifies Spansion memory products that are now offered by both Advanced Micro Devices and Fujitsu. Although the document is marked with the name of the company that originally developed the specification, these products will be offered to customers of both AMD and Fujitsu.

Continuity of Specifications

There is no change to this datasheet as a result of offering the device as a Spansion product. Any changes that have been made are the result of normal datasheet improvement and are noted in the document revision summary, where supported. Future routine revisions will occur when appropriate, and changes will be noted in a revision summary.

Continuity of Ordering Part Numbers

AMD and Fujitsu continue to support existing part numbers beginning with "Am" and "MBM". To order these products, please use only the Ordering Part Numbers listed in this document.

For More Information

Please contact your local AMD or Fujitsu sales office for additional information about Spansion memory solutions.

Publication Number **25561** Revision **A** Amendment **+2** Issue Date **February 6, 2004**

THIS PAGE LEFT INTENTIONALLY BLANK.

Am42DL16x2D

Stacked Multi-Chip Package (MCP) Flash Memory and SRAM

Am29DL16xD 16 Megabit (2 M x 8-Bit/1 M x 16-Bit) CMOS 3.0 Volt-only, Simultaneous Operation Flash Memory and 2 Mbit (128 K x 16-Bit) Static RAM

DISTINCTIVE CHARACTERISTICS

MCP Features

- **Power supply voltage of 2.7 to 3.3 volt**
- **High performance**
  - Access time as fast as 70 ns
- **Package**
  - 69-Ball FBGA
- **Operating Temperature**
  - –40°C to +85°C

Flash Memory Features

ARCHITECTURAL ADVANTAGES

- **Simultaneous Read/Write operations**
  - Data can be continuously read from one bank while executing erase/program functions in other bank
  - Zero latency between read and write operations
- **Secured Silicon (SecSi) Sector: Extra 64 KByte sector**
  - *Factory locked and identifiable:* 16 bytes available for secure, random factory Electronic Serial Number; verifiable as factory locked through autoselect function.
  - *Customer lockable:* Can be read, programmed, or erased just like other sectors. Once locked, data cannot be changed
- **Zero Power Operation**
  - Sophisticated power management circuits reduce power consumed during inactive periods to nearly zero
- **Top or bottom boot block**
- **Manufactured on 0.23 µm process technology**
- **Compatible with JEDEC standards**
  - Pinout and software compatible with single-power-supply flash standard

PERFORMANCE CHARACTERISTICS

- **High performance**
  - 70 ns access time
  - Program time: 4 µs/word typical utilizing Accelerate function
- **Ultra low power consumption (typical values)**
  - 2 mA active read current at 1 MHz
  - 10 mA active read current at 5 MHz
  - 200 nA in standby or automatic sleep mode
- **Minimum 1 million write cycles guaranteed per sector**
- **20 Year data retention at 125°C**
  - Reliable operation for the life of the system

SOFTWARE FEATURES

- **Data Management Software (DMS)**
  - AMD-supplied software manages data programming and erasing, enabling EEPROM emulation
  - Eases sector erase limitations
- **Supports Common Flash Memory Interface (CFI)**
- **Erase Suspend/Erase Resume**
  - Suspends erase operations to allow programming in same bank
- **Data# Polling and Toggle Bits**
  - Provides a software method of detecting the status of program or erase cycles
- **Unlock Bypass Program command**
  - Reduces overall programming time when issuing multiple program command sequences

HARDWARE FEATURES

- **Any combination of sectors can be erased**
- **Ready/Busy# output (RY/BY#)**
  - Hardware method for detecting program or erase cycle completion
- **Hardware reset pin (RESET#)**
  - Hardware method of resetting the internal state machine to reading array data
- **WP#/ACC input pin**
  - Write protect (WP#) function allows protection of two outermost boot sectors, regardless of sector protect status
  - Acceleration (ACC) function accelerates program timing
- **Sector protection**
  - Hardware method of locking a sector, either in-system or using programming equipment, to prevent any program or erase operation within that sector
  - Temporary Sector Unprotect allows changing data in protected sectors in-system

SRAM Features

- **Power dissipation**
  - Operating: 20 mA maximum
  - Standby: 10 µA maximum
- **CE1#s and CE2s Chip Select**
- **Power down features using CE1#s and CE2s**
- **Data retention supply voltage: 1.5 to 3.3 volt**
- **Byte data control: LB#s (DQ0–DQ7), UB#s (DQ8–DQ15)**

This document contains information on a product under development at Advanced Micro Devices. The information is intended to help you evaluate this product. AMD reserves the right to change or discontinue work on this proposed product without notice.

Publication# **25561** Rev: **A** Amendment/**+2**
Issue Date: **February 6, 2004**

GENERAL DESCRIPTION

Am29DL16xD Features

The Am29DL16xD family is a 16 megabit, 3.0 volt-only flash memory device, organized as 1,048,576 words of 16 bits or 2,097,152 bytes of 8 bits each. Word mode data appears on DQ15–DQ0; byte mode data appears on DQ7–DQ0. The device is designed to be programmed in-system with the standard 3.0 volt V_{CC} supply, and can also be programmed in standard EPROM programmers.

The device is available with access times of 70 ns or 85 ns. The device is offered in a 69-ball FBGA package. Standard control pins—chip enable (CE#f), write enable (WE#), and output enable (OE#)—control normal read and write operations, and avoid bus contention issues.

The device requires only a **single 3.0 volt power supply** for both read and write functions. Internally generated and regulated voltages are provided for the program and erase operations.

Simultaneous Read/Write Operations with Zero Latency

The Simultaneous Read/Write architecture provides **simultaneous operation** by dividing the memory space into two banks. The device can improve overall system performance by allowing a host system to program or erase in one bank, then immediately and simultaneously read from the other bank, with zero latency. This releases the system from waiting for the completion of program or erase operations.

The Am29DL16xD devices uses multiple bank architectures to provide flexibility for different applications. Four devices are available with the following bank sizes:

Device	Bank 1	Bank 2
DL161	0.5 Mb	15.5 Mb
DL162	2 Mb	14 Mb
DL163	4 Mb	12 Mb
DL164	8 Mb	8 Mb

The **Secured Silicon (SecSi) Sector** is an extra 64 Kbit sector capable of being permanently locked by AMD or customers. The **SecSi Sector Indicator Bit** (DQ7) is permanently set to a 1 if the part is **factory locked**, and set to a 0 if **customer lockable**. This way, customer lockable parts can never be used to replace a factory locked part.

Factory locked parts provide several options. The SecSi Sector may store a secure, random 16 byte ESN (Electronic Serial Number). Customer Lockable parts may utilize the SecSi Sector as bonus space, reading and writing like any other flash sector, or may permanently lock their own code there.

DMS (Data Management Software) allows systems to easily take advantage of the advanced architecture of the simultaneous read/write product line by allowing removal of EEPROM devices. DMS will also allow the system software to be simplified, as it will perform all functions necessary to modify data in file structures, as opposed to single-byte modifications. To write or update a particular piece of data (a phone number or configuration data, for example), the user only needs to state which piece of data is to be updated, and where the updated data is located in the system. This is an advantage compared to systems where user-written software must keep track of the old data location, status, logical to physical translation of the data onto the Flash memory device (or memory devices), and more. Using DMS, user-written software does not need to interface with the Flash memory directly. Instead, the user's software accesses the Flash memory by calling one of only six functions. AMD provides this software to simplify system design and software integration efforts.

The device offers complete compatibility with the **JEDEC single-power-supply Flash command set standard**. Commands are written to the command register using standard microprocessor write timings. Reading data out of the device is similar to reading from other Flash or EPROM devices.

The host system can detect whether a program or erase operation is complete by using the device **status bits:** RY/BY# pin, DQ7 (Data# Polling) and DQ6/DQ2 (toggle bits). After a program or erase cycle has been completed, the device automatically returns to reading array data.

The **sector erase architecture** allows memory sectors to be erased and reprogrammed without affecting the data contents of other sectors. The device is fully erased when shipped from the factory.

Hardware data protection measures include a low V_{CC} detector that automatically inhibits write operations during power transitions. The **hardware sector protection** feature disables both program and erase operations in any combination of the sectors of memory. This can be achieved in-system or via programming equipment.

The device offers two power-saving features. When addresses have been stable for a specified amount of time, the device enters the **automatic sleep mode**. The system can also place the device into the **standby mode**. Power consumption is greatly reduced in both modes.

TABLE OF CONTENTS

Product Selector Guide 5
MCP Block Diagram 5
Flash Memory Block Diagram 6
Connection Diagram 7
Special Handling Instructions for FBGA Package 7
Pin Description 8
Logic Symbol 8
Ordering Information 9
Device Bus Operations 10
Table 1. Device Bus Operations—Flash Word Mode (CIOf = V_{IH}), SRAM Word Mode (CIOs = V_{CC}) 11
Table 2. Device Bus Operations—Flash Byte Mode (CIOf = V_{SS}), SRAM Word Mode (CIOs = V_{CC}) 12
Word/Byte Configuration 13
Requirements for Reading Array Data 13
Writing Commands/Command Sequences 13
Accelerated Program Operation 13
Autoselect Functions 13
Simultaneous Read/Write Operations with Zero Latency 13
Standby Mode 14
Automatic Sleep Mode 14
RESET#: Hardware Reset Pin 14
Output Disable Mode 14
Table 3. Device Bank Division 14
Table 4. Sector Addresses for Top Boot Sector Devices 15
Table 5. SecSi Sector Addresses for Top Boot Devices 15
Table 6. Sector Addresses for Bottom Boot Sector Devices 16
Table 7. SecSi™ Addresses for Bottom Boot Devices 16
Autoselect Mode 17
Sector/Sector Block Protection and Unprotection 17
Table 8. Top Boot Sector/Sector Block Addresses for Protection/Unprotection 17
Table 9. Bottom Boot Sector/Sector Block Addresses for Protection/Unprotection 17
Write Protect (WP#) 18
Temporary Sector/Sector Block Unprotect 18
Figure 1. Temporary Sector Unprotect Operation 18
Figure 2. In-System Sector/Sector Block Protect and Unprotect Algorithms 19
SecSi (Secured Silicon) Sector Flash Memory Region 20
Factory Locked: SecSi Sector Programmed and Protected At the Factory 20
Customer Lockable: SecSi Sector NOT Programmed or Protected At the Factory 20
Hardware Data Protection 20
Low V_{CC} Write Inhibit 20
Write Pulse “Glitch” Protection 21
Logical Inhibit 21
Power-Up Write Inhibit 21
Common Flash Memory Interface (CFI) 21
Table 10. CFI Query Identification String 21
System Interface String 22
Table 12. Device Geometry Definition 22
Table 13. Primary Vendor-Specific Extended Query 23
Command Definitions 24
Reading Array Data 24
Reset Command 24
Autoselect Command Sequence 24
Enter SecSi Sector/Exit SecSi Sector Command Sequence 25
Byte/Word Program Command Sequence 25
Unlock Bypass Command Sequence 25
Figure 3. Program Operation 26
Chip Erase Command Sequence 26
Sector Erase Command Sequence 26
Erase Suspend/Erase Resume Commands 27
Figure 4. Erase Operation 27
Table 14. Command Definitions 28
Table 15. Autoselect Device ID Codes 28
Write Operation Status 29
DQ7: Data# Polling 29
Figure 5. Data# Polling Algorithm 29
RY/BY#: Ready/Busy# 30
DQ6: Toggle Bit I 30
Figure 6. Toggle Bit Algorithm 30
DQ2: Toggle Bit II 31
Reading Toggle Bits DQ6/DQ2 31
DQ5: Exceeded Timing Limits 31
DQ3: Sector Erase Timer 31
Table 16. Write Operation Status 32
Absolute Maximum Ratings 33
Operating Ranges 33
Industrial (I) Devices 33
V_{CC}f/V_{CC}s Supply Voltage 33
DC Characteristics 34
CMOS Compatible 34
SRAM DC and Operating Characteristics 35
Zero-Power Flash 36
Figure 9. I_{CC1} Current vs. Time (Showing Active and Automatic Sleep Currents) 36
Figure 10. Typical I_{CC1} vs. Frequency 36
Test Conditions 37
Figure 11. Test Setup 37
Table 17. Test Specifications 37
Key To Switching Waveforms 37
Figure 12. Input Waveforms and Measurement Levels 37
AC Characteristics 38
SRAM CE#s Timing 38
Figure 13. Timing Diagram for Alternating Between SRAM to Flash 38
Flash Read-Only Operations 39
Figure 14. Read Operation Timings 39
Hardware Reset (RESET#) 40
Figure 15. Reset Timings 40
Flash Word/Byte Configuration (CIOf) 41
Figure 16. CIOf Timings for Read Operations 41
Figure 17. CIOf Timings for Write Operations 41
Flash Erase and Program Operations 42
Figure 18. Program Operation Timings 43
Figure 19. Accelerated Program Timing Diagram 43
Figure 20. Chip/Sector Erase Operation Timings 44
Figure 21. Back-to-back Read/Write Cycle Timings 45
Figure 22. Data# Polling Timings (During Embedded Algorithms). 45
Figure 23. Toggle Bit Timings (During Embedded Algorithms) 46
Figure 24. DQ2 vs. DQ6 46
Temporary Sector/Sector Block Unprotect 47
Figure 25. Temporary Sector/Sector Block Unprotect Timing Diagram 47

Figure 26. Sector/Sector Block Protect and Unprotect Timing Diagram 48
Alternate CE#f Controlled Erase and Program Operations 49
Figure 27. Flash Alternate CE#f Controlled Write (Erase/Program) Operation Timings 50
SRAM Read Cycle 51
Figure 28. SRAM Read Cycle—Address Controlled 51
Figure 29. SRAM Read Cycle 52
SRAM Write Cycle 53
Figure 30. SRAM Write Cycle—WE# Control 53
Figure 31. SRAM Write Cycle—CE1#s Control 54
Figure 32. SRAM Write Cycle—UB#s and LB#s Control 55
Flash Erase And Programming Performance . 56
Flash Latchup Characteristics. 56
Package Pin Capacitance 56
FLASH Data Retention 56
SRAM Data Retention Characteristics 57
Figure 33. CE1#s Controlled Data Retention Mode 57
Figure 34. CE2s Controlled Data Retention Mode 57
Physical Dimensions 58
FLA069—69-Ball Fine-Pitch Grid Array 8 x 11 mm 58
Revision Summary 59
Revision A (October 24, 2001) 59

PRODUCT SELECTOR GUIDE

Part Number		Am42DL16x2D			
Speed Options	Standard Voltage Range: V_{CC} = 2.7–3.3 V	Flash Memory		SRAM	
		70	**85**	**70**	**85**
Max Access Time (ns)		70	85	70	85
CE# Access (ns)		70	85	70	85
OE# Access (ns)		30	35	35	45

MCP BLOCK DIAGRAM

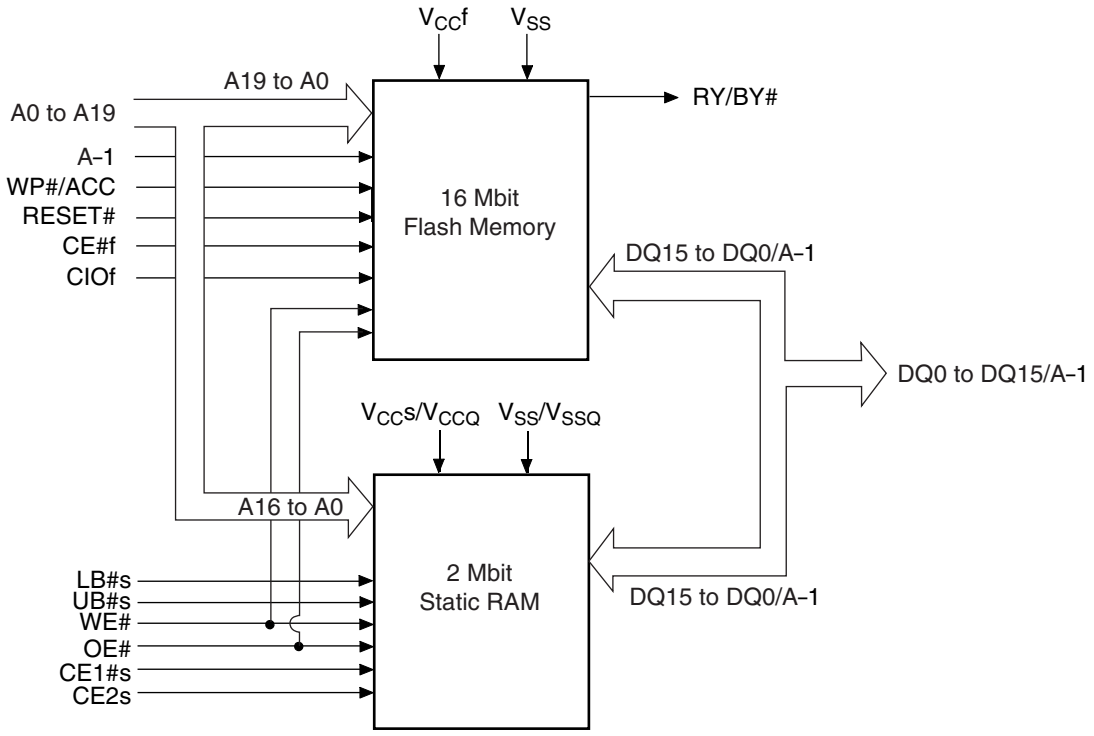

FLASH MEMORY BLOCK DIAGRAM

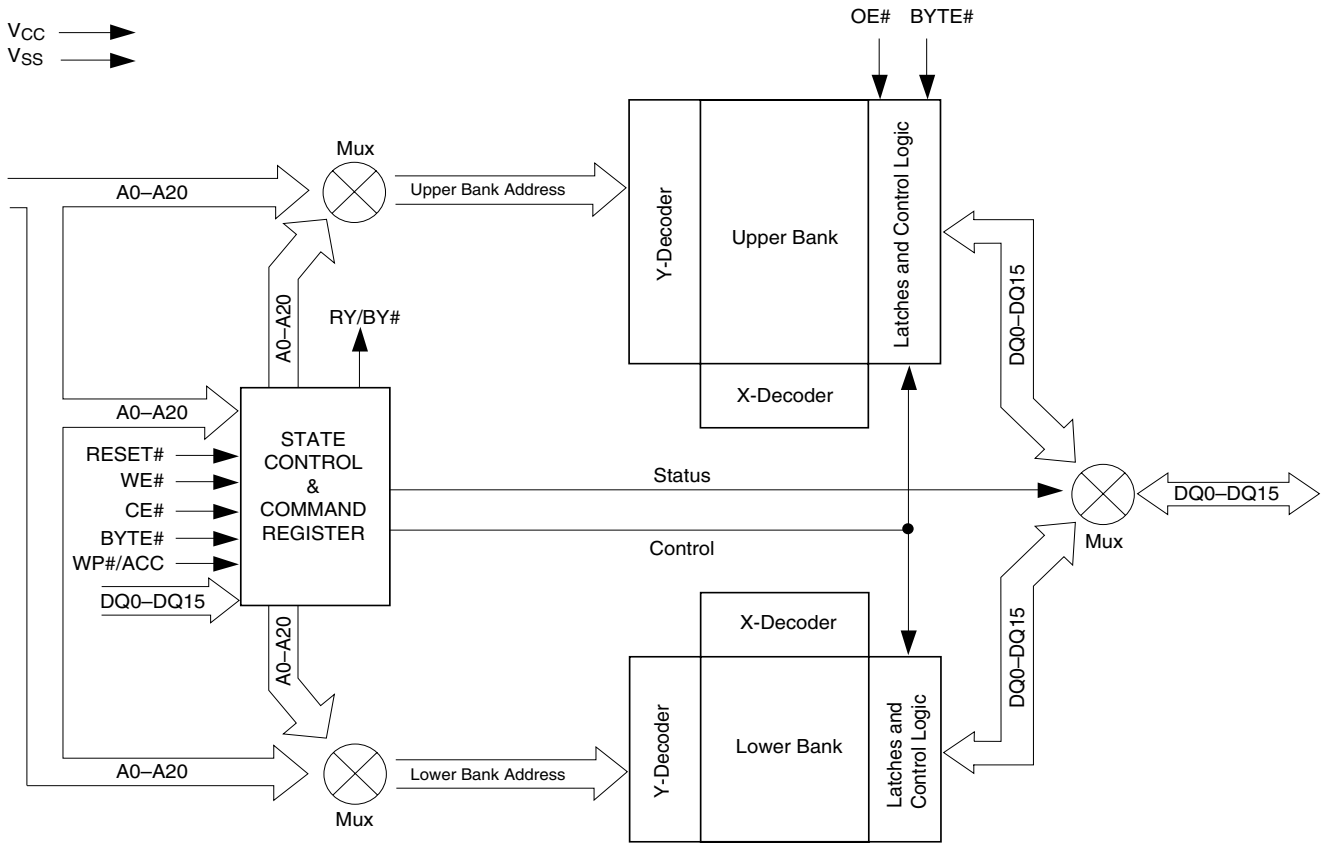

CONNECTION DIAGRAM

69-Ball FBGA
Top View

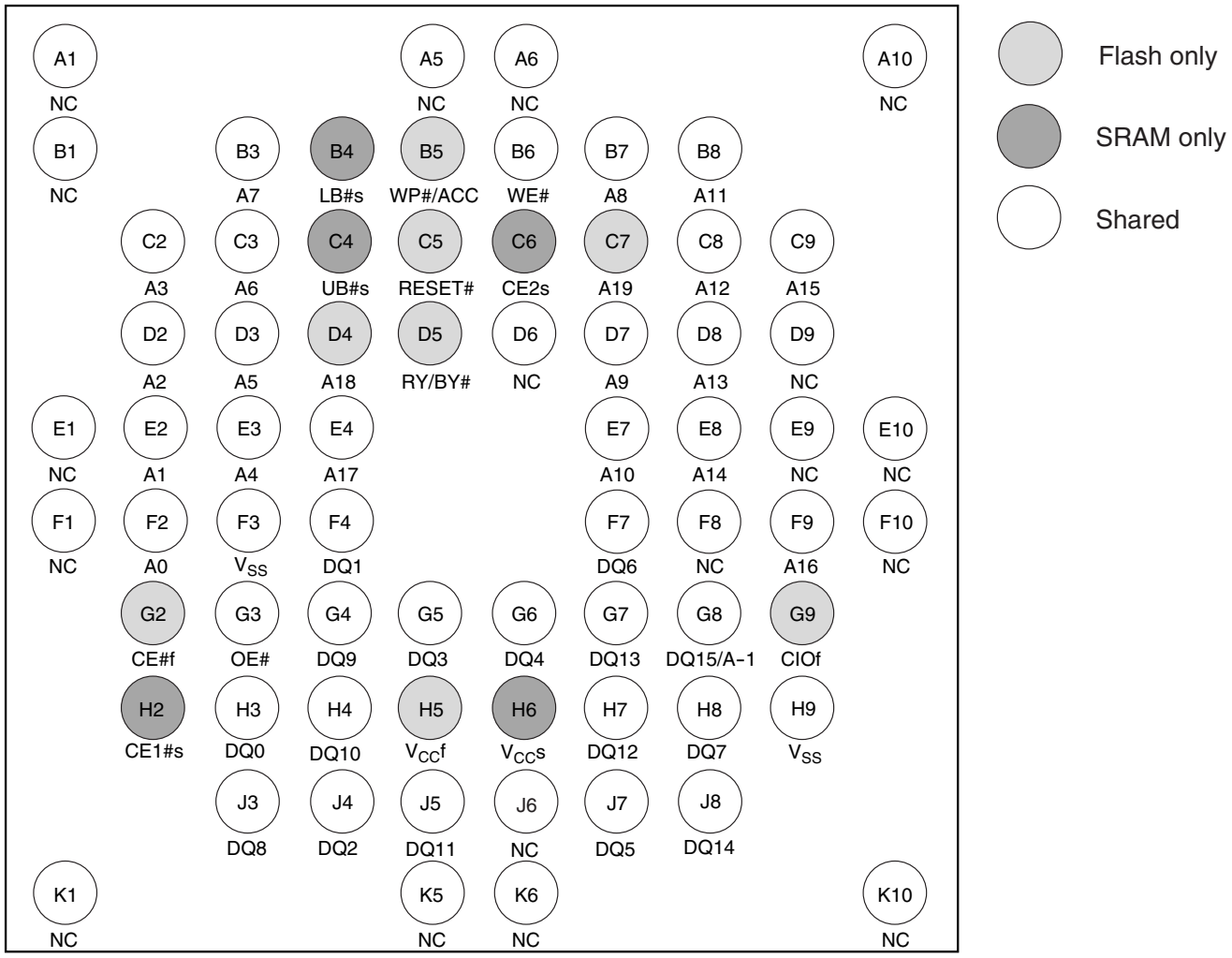

Special Handling Instructions for FBGA Package

Special handling is required for Flash Memory products in FBGA packages.

Flash memory devices in FBGA packages may be damaged if exposed to ultrasonic cleaning methods. The package and/or data integrity may be compromised if the package body is exposed to temperatures above 150°C for prolonged periods of time.

PIN DESCRIPTION

A0–A16	=	17 Address Inputs (Common)
A–1, A19–A17	=	4 Address Inputs (Flash)
DQ15–DQ0	=	16 Data Inputs/Outputs (Common)
CE#f	=	Chip Enable (Flash)
CE#s	=	Chip Enable (SRAM)
OE#	=	Output Enable (Common)
WE#	=	Write Enable (Common)
RY/BY#	=	Ready/Busy Output
UB#s	=	Upper Byte Control (SRAM)
LB#s	=	Lower Byte Control (SRAM)
CIOf	=	I/O Configuration (Flash) CIOf = V_{IH} = Word mode (x16), CIOf = V_{IL} = Byte mode (x8)
RESET#	=	Hardware Reset Pin, Active Low
WP#/ACC	=	Hardware Write Protect/ Acceleration Pin (Flash)
V_{CC}f	=	Flash 3.0 volt-only single power supply (see Product Selector Guide for speed options and voltage supply tolerances)
V_{CC}s	=	SRAM Power Supply
V_{SS}	=	Device Ground (Common)
NC	=	Pin Not Connected Internally

LOGIC SYMBOL

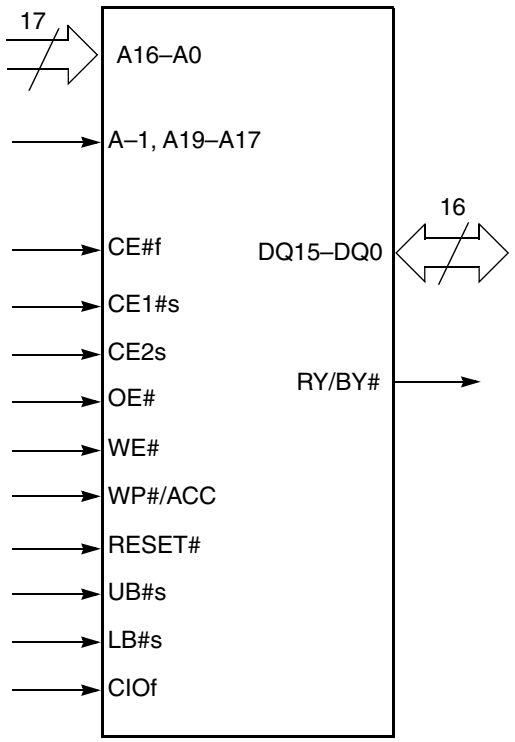

ORDERING INFORMATION

The order number (Valid Combination) is formed by the following:

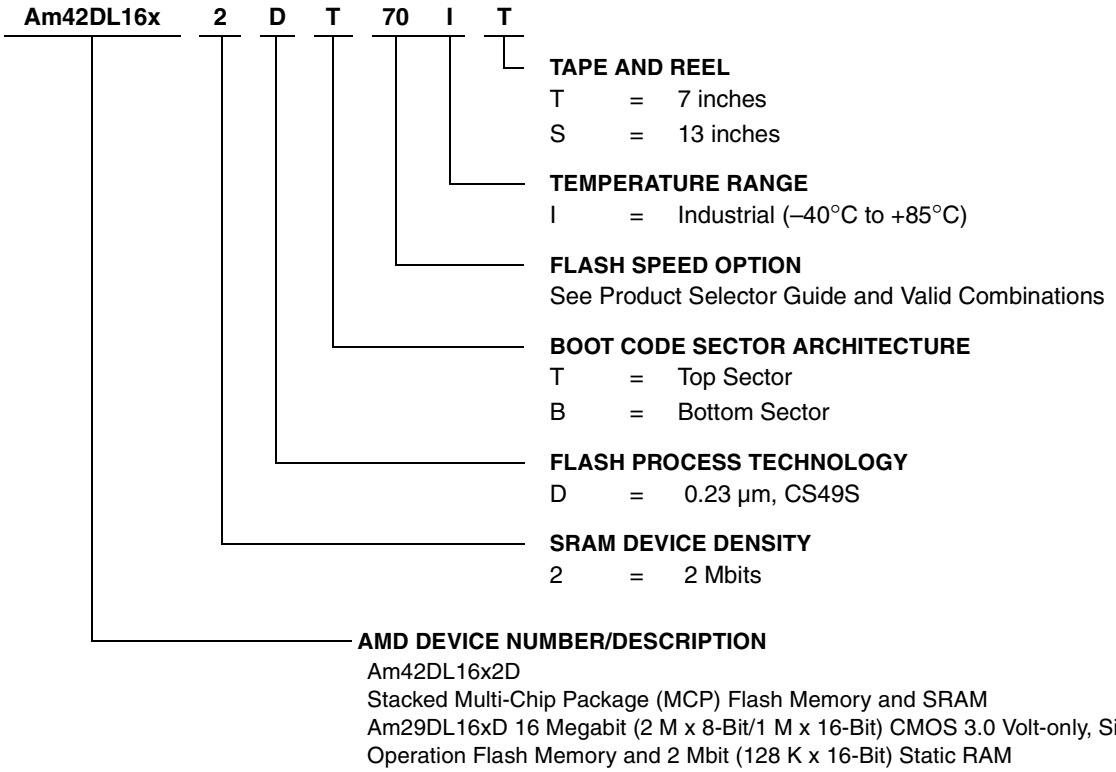

Valid Combinations		
Order Number		**Package Marking**
Am42DL1612DT70I Am42DL1612DB70I	T, S	M42000000I M42000000J
Am42DL1612DT85I Am42DL1612DB85I		M42000000K M42000000L
Am42DL1622DT70I Am42DL1622DB70I		M42000000M M42000000N
Am42DL1622DT85I Am42DL1622DB85I		M42000000O M42000000P
Am42DL1632DT70I Am42DL1632DB70I		M42000000Q M42000000R
Am42DL1632DT85I Am42DL1632DB85I		M42000000S M42000000T
Am42DL1642DT70I Am42DL1642DB70I		M420000004 M420000005
Am42DL1642DT85I Am42DL1642DB85I		M420000006 M420000007

Valid Combinations

Valid Combinations list configurations planned to be supported in volume for this device. Consult the local AMD sales office to confirm availability of specific valid combinations and to check on newly released combinations.

DEVICE BUS OPERATIONS

This section describes the requirements and use of the device bus operations, which are initiated through the internal command register. The command register itself does not occupy any addressable memory location. The register is a latch used to store the commands, along with the address and data information needed to execute the command. The contents of the register serve as inputs to the internal state machine. The state machine outputs dictate the function of the device. Table 1 lists the device bus operations, the inputs and control levels they require, and the resulting output. The following subsections describe each of these operations in further detail.

Table 1. Device Bus Operations—Flash Word Mode (CIOf = V_{IH}), SRAM Word Mode (CIOs = V_{CC})

Operation (Notes 1, 2)	CE#f	CE1#s	CE2s	OE#	WE#	Addr.	LB#s	UB#s	RESET#	WP#/ACC (Note 4)	DQ7–DQ0	DQ15–DQ0
Read from Flash	L	H	X	L	H	A_{IN}	X	X	H	L/H	D_{OUT}	D_{OUT}
		X	L									
Write to Flash	L	H	X	H	L	A_{IN}	X	X	H	(Note 4)	D_{IN}	D_{IN}
		X	L									
Standby	$V_{CC} \pm 0.3$ V	H	X	X	X	X	X	X	$V_{CC} \pm 0.3$ V	H	High-Z	High-Z
		X	L									
Output Disable	L	L	H	H	H	X	L	X	H	L/H	High-Z	High-Z
							X	L				
Flash Hardware Reset	X	H	X	X	X	X	X	X	L	L/H	High-Z	High-Z
		X	L									
		H	X									
Sector Protect (Note 5)	L	X	L	H	L	SA, A6 = L, A1 = H, A0 = L	X	X	V_{ID}	L/H	D_{IN}	X
		H	X									
Sector Unprotect (Note 5)	L	X	L	H	L	SA, A6 = H, A1 = H, A0 = L	X	X	V_{ID}	(Note 6)	D_{IN}	X
Temporary Sector Unprotect	X	H	X	X	X	A_{IN}	X	X	V_{ID}	(Note 6)	D_{IN}	High-Z
		X	L									
Read from SRAM	H	L	H	L	H	A_{IN}	L	L	H	X	D_{OUT}	D_{OUT}
							H	L			High-Z	D_{OUT}
							L	H			D_{OUT}	High-Z
Write to SRAM	H	L	H	X	L	A_{IN}	L	L	H	X	D_{IN}	D_{IN}
							H	L			High-Z	D_{IN}
							L	H			D_{IN}	High-Z

Legend: *L = Logic Low = V_{IL}, H = Logic High = V_{IH}, V_{ID} = 8.5–12.5 V, V_{HH} = 9.0 ± 0.5 V, X = Don't Care, SA = Sector Address, A_{IN} = Address In, D_{IN} = Data In, D_{OUT} = Data Out*

Notes:

1. *Other operations except for those indicated in this column are inhibited.*
2. *Do not apply CE#f = V_{IL}, CE1#s = V_{IL} and CE2s = V_{IH} at the same time.*
3. *Don't care or open LB#s or UB#s.*
4. *If WP#/ACC = V_{IL} , the boot sectors will be protected. If WP#/ACC = V_{IH} the boot sectors protection will be removed. If WP#/ACC = V_{ACC} (9V), the program time will be reduced by 40%.*
5. *The sector protect and sector unprotect functions may also be implemented via programming equipment. See the "Sector/Sector Block Protection and Unprotection" section.*
6. *If WP#/ACC = V_{IL}, the two outermost boot sectors remain protected. If WP#/ACC = V_{IH}, the two outermost boot sector protection depends on whether they were last protected or unprotected using the method described in "Sector/Sector Block Protection and Unprotection". If WP#/ACC = $V_{HH,}$ all sectors will be unprotected.*

Table 2. Device Bus Operations—Flash Byte Mode (CIOf = V_{SS}), SRAM Word Mode (CIOs = V_{CC})

Operation (Notes 1, 2)	CE#f	CE1#s	CE2s	OE#	WE#	Addr.	LB#s (Note 3)	UB#s (Note 3)	RESET#	WP#/ACC (Note 4)	DQ7–DQ0	DQ15–DQ0
Read from Flash	L	H	X	L	H	A_{IN}	X	X	H	L/H	D_{OUT}	High-Z
		X	L									
Write to Flash	L	H	X	H	L	A_{IN}	X	X	H	(Note 3)	D_{IN}	High-Z
		X	L									
Standby	$V_{CC} \pm 0.3$ V	H	X	X	X	X	X	X	$V_{CC} \pm 0.3$ V	H	High-Z	High-Z
		X	L									
Output Disable	L	L	H	H	H	X	L	X	H	L/H	High-Z	High-Z
				H	X	X	X	L				
Flash Hardware Reset	X	H	X	X	X	X	X	X	L	L/H	High-Z	High-Z
		X	L									
Sector Protect (Note 5)	L	H	X	H	L	SA, A6 = L, A1 = H, A0 = L	X	X	V_{ID}	L/H	D_{IN}	X
		X	L									
Sector Unprotect (Note 5)	L	H	X	H	L	SA, A6 = H, A1 = H, A0 = L	X	X	V_{ID}	(Note 6)	D_{IN}	X
		X	L									
Temporary Sector Unprotect	X	H	X	X	X	A_{IN}	X	X	V_{ID}	(Note 6)	D_{IN}	High-Z
		X	L									
Read from SRAM	H	L	H	L	H	A_{IN}	L	L	H	X	D_{OUT}	D_{OUT}
							H	L			High-Z	D_{OUT}
							L	H			D_{OUT}	High-Z
Write to SRAM	H	L	H	X	L	A_{IN}	L	L	H	X	D_{IN}	D_{IN}
							H	L			High-Z	D_{IN}
							L	H			D_{IN}	High-Z

Legend: *L = Logic Low = V_{IL}, H = Logic High = V_{IH}, V_{ID} = 8.5–12.5 V, V_{HH} = 9.0 ± 0.5 V, X = Don't Care, SA = Sector Address, A_{IN} = Address In (for Flash Byte Mode, DQ15 = A-1), D_{IN} = Data In, D_{OUT} = Data Out*

Notes:

1. *Other operations except for those indicated in this column are inhibited.*
2. *Do not apply CE#f = V_{IL}, CE1#s = V_{IL} and CE2s = V_{IH} at the same time.*
3. *Don't care or open LB#s or UB#s.*
4. *If WP#/ACC = V_{IL} , the boot sectors will be protected. If WP#/ACC = V_{IH} the boot sectors protection will be removed. If WP#/ACC = V_{ACC} (9V), the program time will be reduced by 40%.*
5. *The sector protect and sector unprotect functions may also be implemented via programming equipment. See the "Sector/Sector Block Protection and Unprotection" section.*
6. *If WP#/ACC = V_{IL}, the two outermost boot sectors remain protected. If WP#/ACC = V_{IH}, the two outermost boot sector protection depends on whether they were last protected or unprotected using the method described in "Sector/Sector Block Protection and Unprotection". If WP#/ACC = V_{HH}, all sectors will be unprotected*

Word/Byte Configuration

The CIOf pin controls whether the device data I/O pins operate in the byte or word configuration. If the CIOf pin is set at logic '1', the device is in word configuration, DQ0–DQ15 are active and controlled by CE# and OE#.

If the CIOf pin is set at logic '0', the device is in byte configuration, and only data I/O pins DQ0–DQ7 are active and controlled by CE# and OE#. The data I/O pins DQ8–DQ14 are tri-stated, and the DQ15 pin is used as an input for the LSB (A-1) address function.

Requirements for Reading Array Data

To read array data from the outputs, the system must drive the CE#f and OE# pins to V_{IL}. CE#f is the power control and selects the device. OE# is the output control and gates array data to the output pins. WE# should remain at V_{IH}. The CIOf pin determines whether the device outputs array data in words or bytes.

The internal state machine is set for reading array data upon device power-up, or after a hardware reset. This ensures that no spurious alteration of the memory content occurs during the power transition. No command is necessary in this mode to obtain array data. Standard microprocessor read cycles that assert valid addresses on the device address inputs produce valid data on the device data outputs. Each bank remains enabled for read access until the command register contents are altered.

See "Requirements for Reading Array Data" for more information. Refer to the AC Flash Read-Only Operations table for timing specifications and to Figure 14 for the timing diagram. I_{CC1} in the DC Characteristics table represents the active current specification for reading array data.

Writing Commands/Command Sequences

To write a command or command sequence (which includes programming data to the device and erasing sectors of memory), the system must drive WE# and CE#f to V_{IL}, and OE# to V_{IH}.

For program operations, the CIOf pin determines whether the device accepts program data in bytes or words. Refer to "Word/Byte Configuration" for more information.

The device features an **Unlock Bypass** mode to facilitate faster programming. Once a bank enters the Unlock Bypass mode, only two write cycles are required to program a word or byte, instead of four. The "Word/Byte Configuration" section has details on programming data to the device using both standard and Unlock Bypass command sequences.

An erase operation can erase one sector, multiple sectors, or the entire device. Tables 4–5 indicate the address space that each sector occupies. The device address space is divided into two banks: Bank 1 contains the boot/parameter sectors, and Bank 2 contains the larger, code sectors of uniform size. A "bank address" is the address bits required to uniquely select a bank. Similarly, a "sector address" is the address bits required to uniquely select a sector.

I_{CC2} in the DC Characteristics table represents the active current specification for the write mode. The AC Characteristics section contains timing specification tables and timing diagrams for write operations.

Accelerated Program Operation

The device offers accelerated program operations through the ACC function. This is one of two functions provided by the WP#/ACC pin. This function is primarily intended to allow faster manufacturing throughput at the factory.

If the system asserts V_{HH} on this pin, the device automatically enters the aforementioned Unlock Bypass mode, temporarily unprotects any protected sectors, and uses the higher voltage on the pin to reduce the time required for program operations. The system would use a two-cycle program command sequence as required by the Unlock Bypass mode. Removing V_{HH} from the WP#/ACC pin returns the device to normal operation. Note that the WP#/ACC pin must not be at V_{HH} for operations other than accelerated programming, or device damage may result. In addition, the WP#/ACC pin must not be left floating or unconnected; inconsistent behavior of the device may result.

Autoselect Functions

If the system writes the autoselect command sequence, the device enters the autoselect mode. The system can then read autoselect codes from the internal register (which is separate from the memory array) on DQ7–DQ0. Standard read cycle timings apply in this mode. Refer to the Autoselect Mode and Autoselect Command Sequence sections for more information.

Simultaneous Read/Write Operations with Zero Latency

This device is capable of reading data from one bank of memory while programming or erasing in the other bank of memory. An erase operation may also be suspended to read from or program to another location within the same bank (except the sector being erased). Figure 21 shows how read and write cycles may be initiated for simultaneous operation with zero latency. I_{CC6} and I_{CC7} in the DC Characteristics table represent the current specifications for read-while-program and read-while-erase, respectively.

Standby Mode

When the system is not reading or writing to the device, it can place the device in the standby mode. In this mode, current consumption is greatly reduced, and the outputs are placed in the high impedance state, independent of the OE# input.

The device enters the CMOS standby mode when the CE#f and RESET# pins are both held at V_{CC} ± 0.3 V. (Note that this is a more restricted voltage range than V_{IH}.) If CE#f and RESET# are held at V_{IH}, but not within V_{CC} ± 0.3 V, the device will be in the standby mode, but the standby current will be greater. The device requires standard access time (t_{CE}) for read access when the device is in either of these standby modes, before it is ready to read data.

If the device is deselected during erasure or programming, the device draws active current until the operation is completed.

I_{CC3} in the DC Characteristics table represents the standby current specification.

Automatic Sleep Mode

The automatic sleep mode minimizes Flash device energy consumption. The device automatically enables this mode when addresses remain stable for t_{ACC} + 30 ns. The automatic sleep mode is independent of the CE#f, WE#, and OE# control signals. Standard address access timings provide new data when addresses are changed. While in sleep mode, output data is latched and always available to the system. I_{CC4} in the DC Characteristics table represents the automatic sleep mode current specification.

RESET#: Hardware Reset Pin

The RESET# pin provides a hardware method of resetting the device to reading array data. When the RESET# pin is driven low for at least a period of t_{RP}, the device immediately terminates any operation in progress, tristates all output pins, and ignores all read/write commands for the duration of the RESET# pulse. The device also resets the internal state machine to reading array data. The operation that was interrupted should be reinitiated once the device is ready to accept another command sequence, to ensure data integrity.

Current is reduced for the duration of the RESET# pulse. When RESET# is held at V_{SS} ± 0.3 V, the device draws CMOS standby current (I_{CC4}). If RESET# is held at V_{IL} but not within V_{SS} ± 0.3 V, the standby current will be greater.

The RESET# pin may be tied to the system reset circuitry. A system reset would thus also reset the Flash memory, enabling the system to read the boot-up firmware from the Flash memory.

If RESET# is asserted during a program or erase operation, the RY/BY# pin remains a “0” (busy) until the internal reset operation is complete, which requires a time of t_{READY} (during Embedded Algorithms). The system can thus monitor RY/BY# to determine whether the reset operation is complete. If RESET# is asserted when a program or erase operation is not executing (RY/BY# pin is “1”), the reset operation is completed within a time of t_{READY} (not during Embedded Algorithms). The system can read data t_{RH} after the RESET# pin returns to V_{IH}.

Refer to the AC Characteristics tables for RESET# parameters and to Figure 15 for the timing diagram.

Output Disable Mode

When the OE# input is at V_{IH}, output from the device is disabled. The output pins are placed in the high impedance state.

Table 3. Device Bank Division

Device Part Number	Bank 1		Bank 2	
	Megabits	Sector Sizes	Megabits	Sector Sizes
Am29DL161D	0.5 Mbit	Eight 8 Kbyte/4 Kword	15.5 Mbit	Thirty-one 64 Kbyte/32 Kword
Am29DL162D	2 Mbit	Eight 8 Kbyte/4 Kword, three 64 Kbyte/32 Kword	14 Mbit	Twenty-eight 64 Kbyte/32 Kword
Am29DL163D	4 Mbit	Eight 8 Kbyte/4 Kword, seven 64 Kbyte/32 Kword	12 Mbit	Twenty-four 64 Kbyte/32 Kword
Am29DL164D	8 Mbit	Eight 8 Kbyte/4 Kword, fifteen 64 Kbyte/32 Kword	8 Mbit	Sixteen 64 Kbyte/32 Kword

Table 4. Sector Addresses for Top Boot Sector Devices

Am29DL164DT	Am29DL163DT	Am29DL162DT	Am29DL161DT	Sector	Sector Address A19–A12	Sector Size (Kbytes/Kwords)	(x8) Address Range	(x16) Address Range
Bank 2	Bank 2	Bank 2	Bank 2	SA0	00000xxx	64/32	000000h-00FFFFh	00000h–07FFFh
				SA1	00001xxx	64/32	010000h-01FFFFh	08000h–0FFFFh
				SA2	00010xxx	64/32	020000h-02FFFFh	10000h–17FFFh
				SA3	00011xxx	64/32	030000h-03FFFFh	18000h–1FFFFh
				SA4	00100xxx	64/32	040000h-04FFFFh	20000h–27FFFh
				SA5	00101xxx	64/32	050000h-05FFFFh	28000h–2FFFFh
				SA6	00110xxx	64/32	060000h-06FFFFh	30000h–37FFFh
				SA7	00111xxx	64/32	070000h-07FFFFh	38000h–3FFFFh
				SA8	01000xxx	64/32	080000h-08FFFFh	40000h–47FFFh
				SA9	01001xxx	64/32	090000h-09FFFFh	48000h–4FFFFh
				SA10	01010xxx	64/32	0A0000h-0AFFFFh	50000h–57FFFh
				SA11	01011xxx	64/32	0B0000h-0BFFFFh	58000h–5FFFFh
				SA12	01100xxx	64/32	0C0000h-0CFFFFh	60000h–67FFFh
				SA13	01101xxx	64/32	0D0000h-0DFFFFh	68000h–6FFFFh
				SA14	01110xxx	64/32	0E0000h-0EFFFFh	70000h–77FFFh
				SA15	01111xxx	64/32	0F0000h-0FFFFFh	78000h–7FFFFh
Bank 1				SA16	10000xxx	64/32	100000h-10FFFFh	80000h–87FFFh
				SA17	10001xxx	64/32	110000h-11FFFFh	88000h–8FFFFh
				SA18	10010xxx	64/32	120000h-12FFFFh	90000h–97FFFh
				SA19	10011xxx	64/32	130000h-13FFFFh	98000h–9FFFFh
				SA20	10100xxx	64/32	140000h-14FFFFh	A0000h–A7FFFh
				SA21	10101xxx	64/32	150000h-15FFFFh	A8000h–AFFFFh
				SA22	10110xxx	64/32	160000h-16FFFFh	B0000h–B7FFFh
				SA23	10111xxx	64/32	170000h-17FFFFh	B8000h–BFFFFh
	Bank 1			SA24	11000xxx	64/32	180000h-18FFFFh	C0000h–C7FFFh
				SA25	11001xxx	64/32	190000h-19FFFFh	C8000h–CFFFFh
				SA26	11010xxx	64/32	1A0000h-1AFFFFh	D0000h–D7FFFh
				SA27	11011xxx	64/32	1B0000h-1BFFFFh	D8000h–DFFFFh
		Bank 1		SA28	11100xxx	64/32	1C0000h-1CFFFFh	E0000h–E7FFFh
				SA29	11101xxx	64/32	1D0000h-1DFFFFh	E8000h–EFFFFh
				SA30	11110xxx	64/32	1E0000h-1EFFFFh	F0000h–F7FFFh
			Bank 1	SA31	11111000	8/4	1F0000h-1F1FFFh	F8000h–F8FFFh
				SA32	11111001	8/4	1F2000h-1F3FFFh	F9000h–F9FFFh
				SA33	11111010	8/4	1F4000h-1F5FFFh	FA000h–FAFFFh
				SA34	11111011	8/4	1F6000h-1F7FFFh	FB000h–FBFFFh
				SA35	11111100	8/4	1F8000h-1F9FFFh	FC000h–FCFFFh
				SA36	11111101	8/4	1FA000h-1FBFFFh	FD000h–FDFFFh
				SA37	11111110	8/4	1FC000h-1FDFFFh	FE000h–FEFFFh
				SA38	11111111	8/4	1FE000h-1FFFFFh	FF000h–FFFFFh

Note: *The address range is A19:A-1 in byte mode (CIOf=V_{IL}) or A19:A0 in word mode (CIOf=V_{IH}). The bank address bits are A19–A15 for Am29DL161DT, A19–A17 for Am29DL162DT, A19 and A18 for Am29DL163DT, and A19 for Am29DL164DT*

Table 5. SecSi Sector Addresses for Top Boot Devices

Device	Sector Address A19–A12	Sector Size	(x8) Address Range	(x16) Address Range
Am29DL16xDT	11111XXX	64/32	1F0000h-1FFFFFh	F8000h–FFFFFh

Table 6. Sector Addresses for Bottom Boot Sector Devices

Am29DL164DB	Am29DL163DB	Am29DL162DB	Am29DL161DB	Sector	Sector Address A19–A12	Sector Size (Kbytes/Kwords)	(x8) Address Range	(x16) Address Range
Bank 1	Bank 1	Bank 1	Bank 1	SA0	00000000	8/4	000000h-001FFFh	00000h-00FFFh
				SA1	00000001	8/4	002000h-003FFFh	01000h-01FFFh
				SA2	00000010	8/4	004000h-005FFFh	02000h-02FFFh
				SA3	00000011	8/4	006000h-007FFFh	03000h-03FFFh
				SA4	00000100	8/4	008000h-009FFFh	04000h-04FFFh
				SA5	00000101	8/4	00A000h-00BFFFh	05000h-05FFFh
				SA6	00000110	8/4	00C000h-00DFFFh	06000h-06FFFh
				SA7	00000111	8/4	00E000h-00FFFFh	07000h-07FFFh
			Bank 2	SA8	00001XXX	64/32	010000h-01FFFFh	08000h-0FFFFh
				SA9	00010XXX	64/32	020000h-02FFFFh	10000h-17FFFh
				SA10	00011XXX	64/32	030000h-03FFFFh	18000h-1FFFFh
		Bank 2		SA11	00100XXX	64/32	040000h-04FFFFh	20000h-27FFFh
				SA12	00101XXX	64/32	050000h-05FFFFh	28000h-2FFFFh
				SA13	00110XXX	64/32	060000h-06FFFFh	30000h-37FFFh
				SA14	00111XXX	64/32	070000h-07FFFFh	38000h-3FFFFh
	Bank 2			SA15	01000XXX	64/32	080000h-08FFFFh	40000h-47FFFh
				SA16	01001XXX	64/32	090000h-09FFFFh	48000h-4FFFFh
				SA17	01010XXX	64/32	0A0000h-0AFFFFh	50000h-57FFFh
				SA18	01011XXX	64/32	0B0000h-0BFFFFh	58000h-5FFFFh
				SA19	01100XXX	64/32	0C0000h-0CFFFFh	60000h-67FFFh
				SA20	01101XXX	64/32	0D0000h-0DFFFFh	68000h-6FFFFh
				SA21	01110XXX	64/32	0E0000h-0EFFFFh	70000h-77FFFh
				SA22	01111XXX	64/32	0F0000h-0FFFFFh	78000h-7FFFFh
Bank 2				SA23	10000XXX	64/32	100000h-10FFFFh	80000h-87FFFh
				SA24	10001XXX	64/32	110000h-11FFFFh	88000h-8FFFFh
				SA25	10010XXX	64/32	120000h-12FFFFh	90000h-97FFFh
				SA26	10011XXX	64/32	130000h-13FFFFh	98000h-9FFFFh
				SA27	10100XXX	64/32	140000h-14FFFFh	A0000h-A7FFFh
				SA28	10101XXX	64/32	150000h-15FFFFh	A8000h-AFFFFh
				SA29	10110XXX	64/32	160000h-16FFFFh	B0000h-B7FFFh
				SA30	10111XXX	64/32	170000h-17FFFFh	B8000h-BFFFFh
				SA31	11000XXX	64/32	180000h-18FFFFh	C0000h-C7FFFh
				SA32	11001XXX	64/32	190000h-19FFFFh	C8000h-CFFFFh
				SA33	11010XXX	64/32	1A0000h-1AFFFFh	D0000h-D7FFFh
				SA34	11011XXX	64/32	1B0000h-1BFFFFh	D8000h-DFFFFh
				SA35	11100XXX	64/32	1C0000h-1CFFFFh	E0000h-E7FFFh
				SA36	11101XXX	64/32	1D0000h-1DFFFFh	E8000h-EFFFFh
				SA37	11110XXX	64/32	1E0000h-1EFFFFh	F0000h-F7FFFh
				SA38	11111XXX	64/32	1F0000h-1FFFFFh	F8000h-FFFFFh

Note: *The address range is A19:A-1 in byte mode (BYTE#=V_{IL}) or A19:A0 in word mode (BYTE#=V_{IH}). The bank address bits are A19–A15 for Am29DL161DB, A19–A17 for Am29DL162DB, A19 and A18 for Am29DL163DB, and A19 for Am29DL164DB.*

Table 7. SecSi™ Addresses for Bottom Boot Devices

Device	Sector Address A19–A12	Sector Size	(x8) Address Range	(x16) Address Range
Am29DL16xDB	00000XXX	64/32	000000h-00FFFFh	00000h-07FFFh

Autoselect Mode

The autoselect mode provides manufacturer and device identification, and sector protection verification, through identifier codes output on DQ7–DQ0. This mode is primarily intended to automatically match a device to be programmed with its corresponding programming algorithm. However, the autoselect codes can also be accessed in-system through the command register.

To access the autoselect codes in-system, the host system can issue the autoselect command via the command register, as shown in Table 14. This method does not require V_{ID}. Refer to the Autoselect Command Sequence section for more information.

Sector/Sector Block Protection and Unprotection

(Note: For the following discussion, the term “sector” applies to both sectors and sector blocks. A sector block consists of two or more adjacent sectors that are protected or unprotected at the same time (see Tables 8 and 9).

Table 8. Top Boot Sector/Sector Block Addresses for Protection/Unprotection

Sector / Sector Block	A19–A12	Sector / Sector Block Size
SA0	00000XXX	64 Kbytes
SA1-SA3	00001XXX, 00010XXX, 00011XXX	192 (3x64) Kbytes
SA4-SA7	001XXXXX	256 (4x64) Kbytes
SA8-SA11	010XXXXX	256 (4x64) Kbytes
SA12-SA15	011XXXXX	256 (4x64) Kbytes
SA16-SA19	100XXXXX	256 (4x64) Kbytes
SA20-SA23	101XXXXX	256 (4x64) Kbytes
SA24-SA27	110XXXXX	256 (4x64) Kbytes
SA28-SA30	11100XXX, 11101XXX, 11110XXX	192 (3x64) Kbytes
SA31	11111000	8 Kbytes
SA32	11111001	8 Kbytes
SA33	11111010	8 Kbytes
SA34	11111011	8 Kbytes
SA35	11111100	8 Kbytes
SA36	11111101	8 Kbytes
SA37	11111110	8 Kbytes
SA38	11111111	8 Kbytes

Table 9. Bottom Boot Sector/Sector Block Addresses for Protection/Unprotection

Sector / Sector Block	A19–A12	Sector / Sector Block Size
SA38	11111XXX	64 Kbytes
SA37-SA35	11110XXX, 11101XXX, 11100XXX	192 (3x64) Kbytes
SA34-SA31	110XXXXX	256 (4x64) Kbytes
SA30-SA27	101XXXXX	256 (4x64) Kbytes
SA26-SA23	100XXXXX	256 (4x64) Kbytes
SA22-SA19	011XXXXX	256 (4x64) Kbytes
SA18-SA15	010XXXXX	256 (4x64) Kbytes
SA14-SA11	001XXXXX	256 (4x64) Kbytes
SA10-SA8	00001XXX, 00010XXX, 00011XXX	192 (3x64) Kbytes
SA7	00000111	8 Kbytes
SA6	00000110	8 Kbytes
SA5	00000101	8 Kbytes
SA4	00000100	8 Kbytes
SA3	00000011	8 Kbytes
SA2	00000010	8 Kbytes
SA1	00000001	8 Kbytes
SA0	00000000	8 Kbytes

The hardware sector protection feature disables both program and erase operations in any sector. The hardware sector unprotection feature re-enables both program and erase operations in previously protected sectors. Sector protection and unprotection can be implemented as follows.

Sector protection/unprotection requires V_{ID} on the RESET# pin only, and can be implemented either in-system or via programming equipment. Figure 2 shows the algorithms and Figure 26 shows the timing diagram. This method uses standard microprocessor bus cycle timing. For sector unprotect, all unprotected sectors must first be protected prior to the first sector unprotect write cycle. Note that the sector unprotect algorithm unprotects all sectors in parallel. All previously protected sectors must be individually re-protected. To change data in protected sectors effi-

The device is shipped with all sectors unprotected.

It is possible to determine whether a sector is protected or unprotected. See the Autoselect Mode section for details.

Write Protect (WP#)

The Write Protect function provides a hardware method of protecting certain boot sectors without using V_{ID}. This function is one of two provided by the WP#/ACC pin.

If the system asserts V_{IL} on the WP#/ACC pin, the device disables program and erase functions in the two "outermost" 8 Kbyte boot sectors independently of whether those sectors were protected or unprotected using the method described in "Sector/Sector Block Protection and Unprotection". The two outermost 8 Kbyte boot sectors are the two sectors containing the lowest addresses in a top-boot-configured device, or the two sectors containing the highest addresses in a top-boot-configured device.

If the system asserts V_{IH} on the WP#/ACC pin, the device reverts to whether the two outermost 8 Kbyte boot sectors were last set to be protected or unprotected. That is, sector protection or unprotection for these two sectors depends on whether they were last protected or unprotected using the method described in "Sector/Sector Block Protection and Unprotection".

Note that the WP#/ACC pin must not be left floating or unconnected; inconsistent behavior of the device may result.

Temporary Sector/Sector Block Unprotect

(Note: For the following discussion, the term "sector" applies to both sectors and sector blocks. A sector block consists of two or more adjacent sectors that are protected or unprotected at the same time (see Tables 8 and 9).

This feature allows temporary unprotection of previously protected sectors to change data in-system. The Sector Unprotect mode is activated by setting the RESET# pin to V_{ID} (8.5 V – 12.5 V). During this mode, formerly protected sectors can be programmed or erased by selecting the sector addresses. Once V_{ID} is removed from the RESET# pin, all the previously protected sectors are protected again. Figure 1 shows the algorithm, and Figure 25 shows the timing diagrams, for this feature.

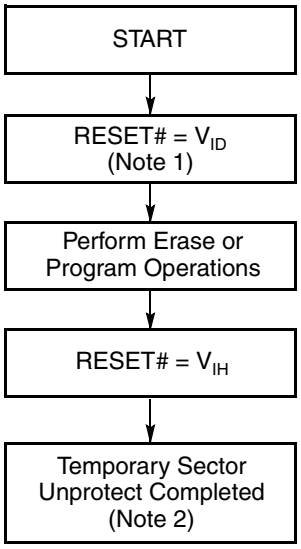

Notes:

1. *All protected sectors unprotected (If WP#/ACC = V_{IL}, outermost boot sectors will remain protected).*
2. *All previously protected sectors are protected once again.*

Figure 1. Temporary Sector Unprotect Operation

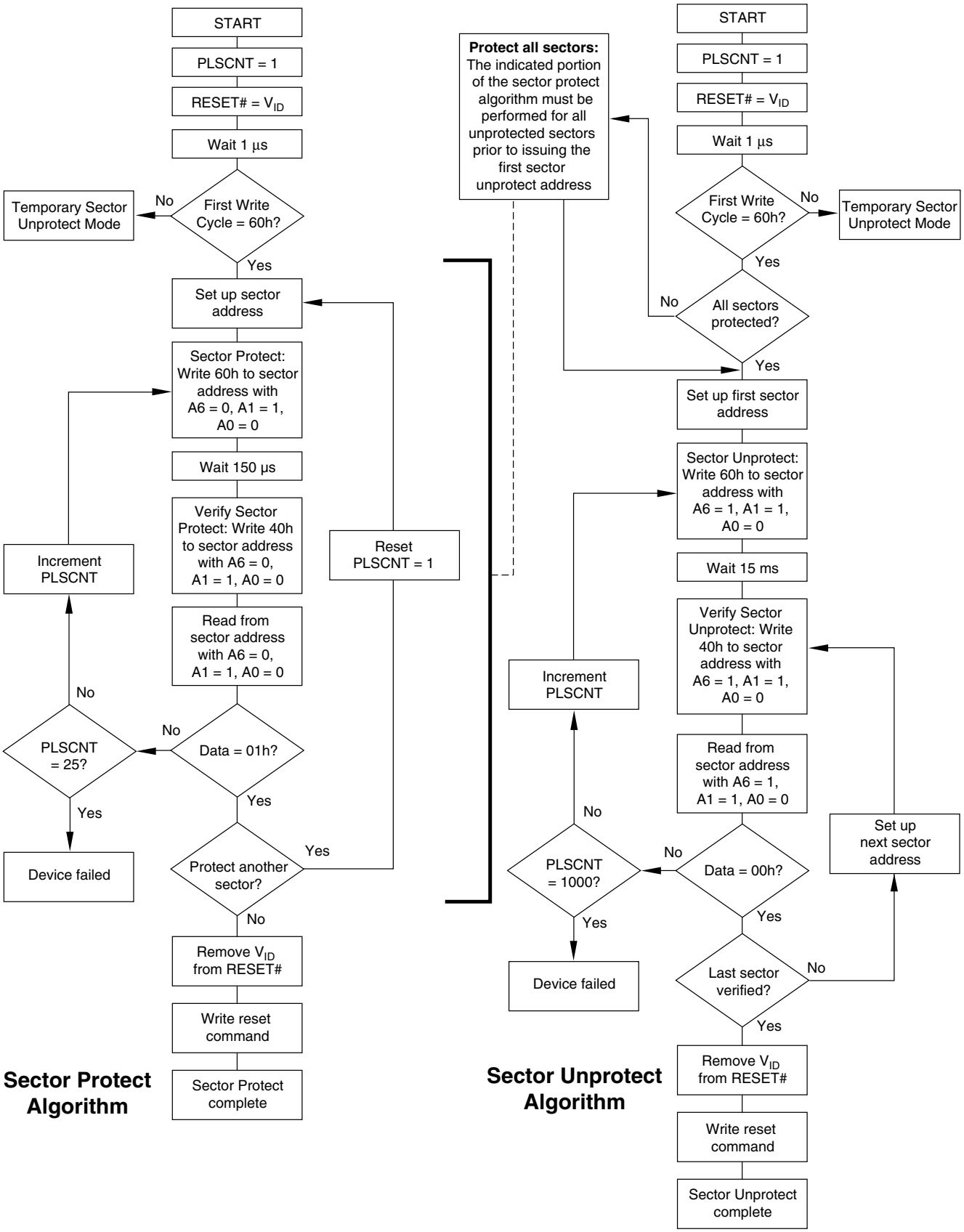

Note: The term "sector" in the figure applies to both sectors and sector blocks.

Figure 2. In-System Sector/Sector Block Protect and Unprotect Algorithms

SecSi (Secured Silicon) Sector Flash Memory Region

The SecSi (Secured Silicon) Sector feature provides a Flash memory region that enables permanent part identification through an Electronic Serial Number (ESN). The SecSi Sector is 64 Kbytes in length, and uses a SecSi Sector Indicator Bit to indicate whether or not the SecSi Sector is locked when shipped from the factory. This bit is permanently set at the factory and cannot be changed, which prevents cloning of a factory locked part. This ensures the security of the ESN once the product is shipped to the field. **Current version of this device has 64 Kbytes; future versions will have only 256 bytes. This should be considered during system design.**

AMD offers the device with the SecSi Sector either factory locked or customer lockable. The factory-locked version is always protected when shipped from the factory, and has the SecSi Sector Indicator Bit permanently set to a "1." The customer-lockable version is shipped with the unprotected, allowing customers to utilize the that sector in any manner they choose. The customer-lockable version has the SecSi Sector Indicator Bit permanently set to a "0." Thus, the SecSi Sector Indicator Bit prevents customer-lockable devices from being used to replace devices that are factory locked.

The system accesses the SecSi Sector through a command sequence (see "Enter SecSi Sector/Exit SecSi Sector Command Sequence"). After the system has written the Enter SecSi Sector command sequence, it may read the SecSi Sector by using the addresses normally occupied by the boot sectors. This mode of operation continues until the system issues the Exit SecSi Sector command sequence, or until power is removed from the device. On power-up, or following a hardware reset, the device reverts to sending commands to the boot sectors.

Factory Locked: SecSi Sector Programmed and Protected At the Factory

In a factory locked device, the SecSi Sector is protected when the device is shipped from the factory. The SecSi Sector cannot be modified in any way. The device is available preprogrammed with a random, secure ESN only

In devices that have an ESN, the Top Boot device will have the 16-byte ESN, with the starting address of the ESN will be at the bottom of the lowest 8 Kbyte boot sector at addresses F8000h–F8007h in word mode (or 1F0000h–1F000Fh in byte mode).

Customer Lockable: SecSi Sector NOT Programmed or Protected At the Factory

If the security feature is not required, the SecSi Sector can be treated as an additional Flash memory space, expanding the size of the available Flash array by 64 Kbytes. **Current version of this device has 64 Kbytes; future versions will have only 256 bytes. This should be considered during system design.** The SecSi Sector can be read, programmed, and erased as often as required. Note that the accelerated programming (ACC) and unlock bypass functions are not available when programming the SecSi Sector.

The SecSi Sector area can be protected using one of the following procedures:

- Write the three-cycle Enter SecSi Sector Region command sequence, and then follow the in-system sector protect algorithm as shown in Figure 2, except that *RESET# may be at either V_{IH} or V_{ID}*. This allows in-system protection of the without raising any device pin to a high voltage. Note that this method is only applicable to the SecSi Sector.
- Write the three-cycle Enter SecSi Sector Region command sequence, and then use the alternate method of sector protection described in the "Sector/Sector Block Protection and Unprotection".

Once the SecSi Sector is locked and verified, the system must write the Exit SecSi Sector Region command sequence to return to reading and writing the remainder of the array.

The SecSi Sector protection must be used with caution since, once protected, there is no procedure available for unprotecting the SecSi Sector area and none of the bits in the SecSi Sector memory space can be modified in any way.

Hardware Data Protection

The command sequence requirement of unlock cycles for programming or erasing provides data protection against inadvertent writes (refer to Table 14 for command definitions). In addition, the following hardware data protection measures prevent accidental erasure or programming, which might otherwise be caused by spurious system level signals during V_{CC} power-up and power-down transitions, or from system noise.

Low V_{CC} Write Inhibit

When V_{CC} is less than V_{LKO}, the device does not accept any write cycles. This protects data during V_{CC} power-up and power-down. The command register and all internal program/erase circuits are disabled, and the device resets to reading array data. Subsequent writes are ignored until V_{CC} is greater than V_{LKO}. The system must provide the proper signals to the control pins to prevent unintentional writes when V_{CC} is greater than V_{LKO}.

Write Pulse "Glitch" Protection

Noise pulses of less than 5 ns (typical) on OE#, CE#f or WE# do not initiate a write cycle.

Logical Inhibit

Write cycles are inhibited by holding any one of OE# = V_{IL}, CE#f = V_{IH} or WE# = V_{IH}. To initiate a write cycle, CE#f and WE# must be a logical zero while OE# is a logical one.

Power-Up Write Inhibit

If WE# = CE#f = V_{IL} and OE# = V_{IH} during power up, the device does not accept commands on the rising edge of WE#. The internal state machine is automatically reset to reading array data on power-up.

COMMON FLASH MEMORY INTERFACE (CFI)

The Common Flash Interface (CFI) specification outlines device and host system software interrogation handshake, which allows specific vendor-specified software algorithms to be used for entire families of devices. Software support can then be device-independent, JEDEC ID-independent, and forward- and backward-compatible for the specified flash device families. Flash vendors can standardize their existing interfaces for long-term compatibility.

This device enters the CFI Query mode when the system writes the CFI Query command, 98h, to address 55h in word mode (or address AAh in byte mode), any time the device is ready to read array data. The system can read CFI information at the addresses given in Tables 10–13. To terminate reading CFI data, the system must write the reset command. The CFI Query mode is not accessible when the device is executing an Embedded Program or embedded erase algorithm.

The system can also write the CFI query command when the device is in the autoselect mode. The device enters the CFI query mode, and the system can read CFI data at the addresses given in Tables 10–13. The system must write the reset command to return the device to the autoselect mode.

For further information, please refer to the CFI Specification and CFI Publication 100, available via the World Wide Web at http://www.amd.com/products/nvd/overview/cfi.html. Alternatively, contact an AMD representative for copies of these documents.

Table 10. CFI Query Identification String

Addresses (Word Mode)	Data	Description
10h 11h 12h	0051h 0052h 0059h	Query Unique ASCII string "QRY"
13h 14h	0002h 0000h	Primary OEM Command Set
15h 16h	0040h 0000h	Address for Primary Extended Table
17h 18h	0000h 0000h	Alternate OEM Command Set (00h = none exists)
19h 1Ah	0000h 0000h	Address for Alternate OEM Extended Table (00h = none exists)

Table 11. System Interface String

Addresses (Word Mode)	Data	Description
1Bh	0027h	V_{CC} Min. (write/erase) D7–D4: volt, D3–D0: 100 millivolt
1Ch	0036h	V_{CC} Max. (write/erase) D7–D4: volt, D3–D0: 100 millivolt
1Dh	0000h	V_{PP} Min. voltage (00h = no V_{PP} pin present)
1Eh	0000h	V_{PP} Max. voltage (00h = no V_{PP} pin present)
1Fh	0004h	Typical timeout per single byte/word write 2^N µs
20h	0000h	Typical timeout for Min. size buffer write 2^N µs (00h = not supported)
21h	000Ah	Typical timeout per individual block erase 2^N ms
22h	0000h	Typical timeout for full chip erase 2^N ms (00h = not supported)
23h	0005h	Max. timeout for byte/word write 2^N times typical
24h	0000h	Max. timeout for buffer write 2^N times typical
25h	0004h	Max. timeout per individual block erase 2^N times typical
26h	0000h	Max. timeout for full chip erase 2^N times typical (00h = not supported)

Table 12. Device Geometry Definition

Addresses (Word Mode)	Data	Description
27h	0016h	Device Size = 2^N byte
28h 29h	0002h 0000h	Flash Device Interface description (refer to CFI publication 100)
2Ah 2Bh	0000h 0000h	Max. number of byte in multi-byte write = 2^N (00h = not supported)
2Ch	0002h	Number of Erase Block Regions within device
2Dh 2Eh 2Fh 30h	0007h 0000h 0020h 0000h	Erase Block Region 1 Information (refer to the CFI specification or CFI publication 100)
31h 32h 33h 34h	003Eh 0000h 0000h 0001h	Erase Block Region 2 Information
35h 36h 37h 38h	0000h 0000h 0000h 0000h	Erase Block Region 3 Information
39h 3Ah 3Bh 3Ch	0000h 0000h 0000h 0000h	Erase Block Region 4 Information

Table 13. Primary Vendor-Specific Extended Query

Addresses (Word Mode)	Data	Description
40h 41h 42h	0050h 0052h 0049h	Query-unique ASCII string “PRI”
43h	0031h	Major version number, ASCII
44h	0033h	Minor version number, ASCII
45h	0001h	Address Sensitive Unlock (Bits 1-0) 0 = Required, 1 = Not Required Silicon Revision Number (Bits 7-2)
46h	0002h	Erase Suspend 0 = Not Supported, 1 = To Read Only, 2 = To Read & Write
47h	0001h	Sector Protect 0 = Not Supported, X = Number of sectors in per group
48h	0001h	Sector Temporary Unprotect 00 = Not Supported, 01 = Supported
49h	0004h	Sector Protect/Unprotect scheme 04 = 29LV800 mode
4Ah	00XXh (See Note)	Simultaneous Operation 00 = Not Supported, X= Number of Sectors in Bank 2 (Uniform Bank)
4Bh	0000h	Burst Mode Type 00 = Not Supported, 01 = Supported
4Ch	0000h	Page Mode Type 00 = Not Supported, 01 = 4 Word Page, 02 = 8 Word Page
4Dh	0085h	ACC (Acceleration) Supply Minimum 00h = Not Supported, D7-D4: Volt, D3-D0: 100 mV
4Eh	0095h	ACC (Acceleration) Supply Maximum 00h = Not Supported, D7-D4: Volt, D3-D0: 100 mV
4Fh	000Xh	Top/Bottom Boot Sector Flag 02h = Bottom Boot Device, 03h = Top Boot Device

Note:
The number of sectors in Bank 2 is device dependent.
Am29DL161 = 1Fh
Am29DL162 = 1Ch
Am29DL163 = 18h
Am29DL164 = 10h

COMMAND DEFINITIONS

Writing specific address and data commands or sequences into the command register initiates device operations. Table 14 defines the valid register command sequences. Writing **incorrect address and data values** or writing them in the **improper sequence** may place the device in an unknown state.

All addresses are latched on the falling edge of WE# or CE#f, whichever happens later. All data is latched on the rising edge of WE# or CE#f, whichever happens first. Refer to the AC Characteristics section for timing diagrams.

Reading Array Data

The device is automatically set to reading array data after device power-up. No commands are required to retrieve data. Each bank is ready to read array data after completing an Embedded Program or Embedded Erase algorithm.

After the device accepts an Erase Suspend command, the corresponding bank enters the erase-suspend-read mode, after which the system can read data from any non-erase-suspended sector within the same bank. After completing a programming operation in the Erase Suspend mode, the system may once again read array data with the same exception. See the Erase Suspend/Erase Resume Commands section for more information.

The system *must* issue the reset command to return a bank to the read (or erase-suspend-read) mode if DQ5 goes high during an active program or erase operation, or if the bank is in the autoselect mode. See the next section, Reset Command, for more information.

See also Requirements for Reading Array Data in the Device Bus Operations section for more information. The Flash Read-Only Operations table provides the read parameters, and Figure 14 shows the timing diagram.

Reset Command

Writing the reset command resets the banks to the read or erase-suspend-read mode. Address bits are don't cares for this command.

The reset command may be written between the sequence cycles in an erase command sequence before erasing begins. This resets the bank to which the system was writing to reading array data. Once erasure begins, however, the device ignores reset commands until the operation is complete.

The reset command may be written between the sequence cycles in a program command sequence before programming begins. This resets the bank to which the system was writing to reading array data. If the program command sequence is written to a bank that is in the Erase Suspend mode, writing the reset command returns that bank to the erase-suspend-read mode. Once programming begins, however, the device ignores reset commands until the operation is complete.

The reset command may be written between the sequence cycles in an autoselect command sequence. Once in the autoselect mode, the reset command must be written to return to reading array data. If a bank entered the autoselect mode while in the Erase Suspend mode, writing the reset command returns that bank to the erase-suspend-read mode.

If DQ5 goes high during a program or erase operation, writing the reset command returns the banks to reading array data (or erase-suspend-read mode if that bank was in Erase Suspend).

Autoselect Command Sequence

The autoselect command sequence allows the host system to access the manufacturer and device codes, and determine whether or not a sector is protected. Table 14 shows the address and data requirements. The autoselect command sequence may be written to an address within a bank that is either in the read or erase-suspend-read mode. The autoselect command may not be written while the device is actively programming or erasing in the other bank.

The autoselect command sequence is initiated by first writing two unlock cycles. This is followed by a third write cycle that contains the bank address and the autoselect command. The bank then enters the autoselect mode. The system may read at any address within the same bank any number of times without initiating another autoselect command sequence:

- A read cycle at address (BA)XX00h (where BA is the bank address) returns the manufacturer code.
- A read cycle at address (BA)XX01h in word mode (or (BA)XX02h in byte mode) returns the device code.
- A read cycle to an address containing a sector address (SA) within the same bank, and the address 02h on A7–A0 in word mode (or the address 04h on A6–A-1 in byte mode) returns 01h if the sector is protected, or 00h if it is unprotected. (Refer to Tables 4–5 for valid sector addresses).

The system must write the reset command to return to reading array data (or erase-suspend-read mode if the bank was previously in Erase Suspend).

Enter SecSi Sector/Exit SecSi Sector Command Sequence

The system can access the SecSi Sector region by issuing the three-cycle Enter SecSi Sector command sequence. The device continues to access the SecSi Sector region until the system issues the four-cycle Exit SecSi Sector command sequence. The Exit SecSi Sector command sequence returns the device to normal operation. The SecSi Sector is not accessible when the device is executing an Embedded Program or Embedded Erase algorithm. Table 14 shows the address and data requirements for both command sequences. See also "SecSi (Secured Silicon) Sector Flash Memory Region" for further information. Note that a hardware reset (RESET#=V_{IL}) will reset the device to reading array data.

Byte/Word Program Command Sequence

The system may program the device by word or byte, depending on the state of the CIOf pin. Programming is a four-bus-cycle operation. The program command sequence is initiated by writing two unlock write cycles, followed by the program set-up command. The program address and data are written next, which in turn initiate the Embedded Program algorithm. The system is *not* required to provide further controls or timings. The device automatically provides internally generated program pulses and verifies the programmed cell margin. Table 14 shows the address and data requirements for the byteword program command sequence.

When the Embedded Program algorithm is complete, that bank then returns to reading array data and addresses are no longer latched. The system can determine the status of the program operation by using DQ7, DQ6, or RY/BY#. Refer to the Write Operation Status section for information on these status bits.

Any commands written to the device during the Embedded Program Algorithm are ignored. Note that a **hardware reset** immediately terminates the program operation. The program command sequence should be reinitiated once that bank has returned to reading array data, to ensure data integrity.

Programming is allowed in any sequence and across sector boundaries. **A bit cannot be programmed from "0" back to a "1."** Attempting to do so may cause that bank to set DQ5 = 1, or cause the DQ7 and DQ6 status bits to indicate the operation was successful. However, a succeeding read will show that the data is still "0." Only erase operations can convert a "0" to a "1."

Unlock Bypass Command Sequence

The unlock bypass feature allows the system to program bytes or words to a bank faster than using the standard program command sequence. The unlock bypass command sequence is initiated by first writing two unlock cycles. This is followed by a third write cycle containing the unlock bypass command, 20h. That bank then enters the unlock bypass mode. A two-cycle unlock bypass program command sequence is all that is required to program in this mode. The first cycle in this sequence contains the unlock bypass program command, A0h; the second cycle contains the program address and data. Additional data is programmed in the same manner. This mode dispenses with the initial two unlock cycles required in the standard program command sequence, resulting in faster total programming time. Table 14 shows the requirements for the command sequence.

During the unlock bypass mode, only the Unlock Bypass Program and Unlock Bypass Reset commands are valid. To exit the unlock bypass mode, the system must issue the two-cycle unlock bypass reset command sequence. The bank then returns to the reading array data.

The device offers accelerated program operations through the WP#/ACC pin. When the system asserts V_{HH} on the WP#/ACC pin, the device automatically enters the Unlock Bypass mode. The system may then write the two-cycle Unlock Bypass program command sequence. The device uses the higher voltage on the WP#/ACC pin to accelerate the operation. Note that the WP#/ACC pin must not be at V_{HH} any operation other than accelerated programming, or device damage may result. In addition, the WP#/ACC pin must not be left floating or unconnected; inconsistent behavior of the device may result.

Figure 3 illustrates the algorithm for the program operation. Refer to the Flash Erase and Program Operations table in the AC Characteristics section for parameters, and Figure 18 for timing diagrams.

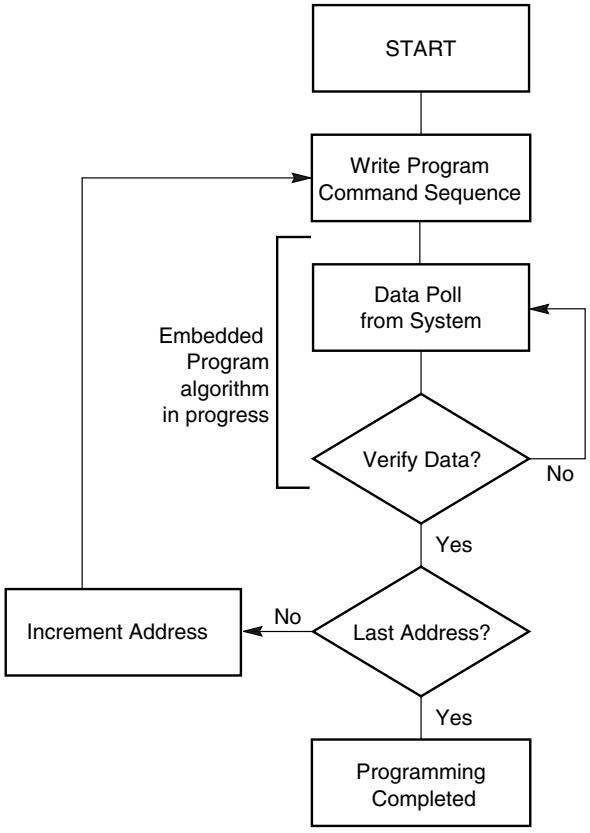

Note: *See Table 14 for program command sequence.*

Figure 3. Program Operation

Chip Erase Command Sequence

Chip erase is a six bus cycle operation. The chip erase command sequence is initiated by writing two unlock cycles, followed by a set-up command. Two additional unlock write cycles are then followed by the chip erase command, which in turn invokes the Embedded Erase algorithm. The device does *not* require the system to preprogram prior to erase. The Embedded Erase algorithm automatically preprograms and verifies the entire memory for an all zero data pattern prior to electrical erase. The system is not required to provide any controls or timings during these operations. Table 14 shows the address and data requirements for the chip erase command sequence.

When the Embedded Erase algorithm is complete, that bank returns to reading array data and addresses are no longer latched. The system can determine the status of the erase operation by using DQ7, DQ6, DQ2, or RY/BY#. Refer to the Write Operation Status section for information on these status bits.

Any commands written during the chip erase operation are ignored. However, note that a **hardware reset** immediately terminates the erase operation. If that occurs, the chip erase command sequence should be reinitiated once that bank has returned to reading array data, to ensure data integrity.

Figure 4 illustrates the algorithm for the erase operation. Refer to the Flash Erase and Program Operations tables in the AC Characteristics section for parameters, and Figure 20 section for timing diagrams.

Sector Erase Command Sequence

Sector erase is a six bus cycle operation. The sector erase command sequence is initiated by writing two unlock cycles, followed by a set-up command. Two additional unlock cycles are written, and are then followed by the address of the sector to be erased, and the sector erase command. Table 14 shows the address and data requirements for the sector erase command sequence.

The device does *not* require the system to preprogram prior to erase. The Embedded Erase algorithm automatically programs and verifies the entire memory for an all zero data pattern prior to electrical erase. The system is not required to provide any controls or timings during these operations.

After the command sequence is written, a sector erase time-out of 50 µs occurs. During the time-out period, additional sector addresses and sector erase commands may be written. Loading the sector erase buffer may be done in any sequence, and the number of sectors may be from one sector to all sectors. The time between these additional cycles must be less than 50 µs, otherwise erasure may begin. Any sector erase address and command following the exceeded time-out may or may not be accepted. It is recommended that processor interrupts be disabled during this time to ensure all commands are accepted. The interrupts can be re-enabled after the last Sector Erase command is written. **Any command other than Sector Erase or Erase Suspend during the time-out period resets that bank to reading array data.** The system must rewrite the command sequence and any additional addresses and commands.

The system can monitor DQ3 to determine if the sector erase timer has timed out (See the section on DQ3: Sector Erase Timer.). The time-out begins from the rising edge of the final WE# pulse in the command sequence.

When the Embedded Erase algorithm is complete, the bank returns to reading array data and addresses are no longer latched. Note that while the Embedded Erase operation is in progress, the system can read data from the non-erasing bank. The system can determine the status of the erase operation by reading DQ7, DQ6, DQ2, or RY/BY# in the erasing bank. Refer

to the Write Operation Status section for information on these status bits.

Once the sector erase operation has begun, only the Erase Suspend command is valid. All other commands are ignored. However, note that a **hardware reset** immediately terminates the erase operation. If that occurs, the sector erase command sequence should be reinitiated once that bank has returned to reading array data, to ensure data integrity.

Figure 4 illustrates the algorithm for the erase operation. Refer to the Flash Erase and Program Operations tables in the AC Characteristics section for parameters, and Figure 20 section for timing diagrams.

Erase Suspend/Erase Resume Commands

The Erase Suspend command, B0h, allows the system to interrupt a sector erase operation and then read data from, or program data to, any sector not selected for erasure. The bank address is required when writing this command. This command is valid only during the sector erase operation, including the 50 µs time-out period during the sector erase command sequence. The Erase Suspend command is ignored if written during the chip erase operation or Embedded Program algorithm.

When the Erase Suspend command is written during the sector erase operation, the device requires a maximum of 20 µs to suspend the erase operation. However, when the Erase Suspend command is written during the sector erase time-out, the device immediately terminates the time-out period and suspends the erase operation.

After the erase operation has been suspended, the bank enters the erase-suspend-read mode. The system can read data from or program data to any sector not selected for erasure. (The device “erase suspends” all sectors selected for erasure.) Reading at any address within erase-suspended sectors produces status information on DQ7–DQ0. The system can use DQ7, or DQ6 and DQ2 together, to determine if a sector is actively erasing or is erase-suspended. Refer to the Write Operation Status section for information on these status bits.

After an erase-suspended program operation is complete, the bank returns to the erase-suspend-read mode. The system can determine the status of the program operation using the DQ7 or DQ6 status bits, just as in the standard Byte Program operation. Refer to the Write Operation Status section for more information.

In the erase-suspend-read mode, the system can also issue the autoselect command sequence. Refer to the Autoselect Mode and Autoselect Command Sequence sections for details.

To resume the sector erase operation, the system must write the Erase Resume command. The bank address of the erase-suspended bank is required when writing this command. Further writes of the Resume command are ignored. Another Erase Suspend command can be written after the chip has resumed erasing.

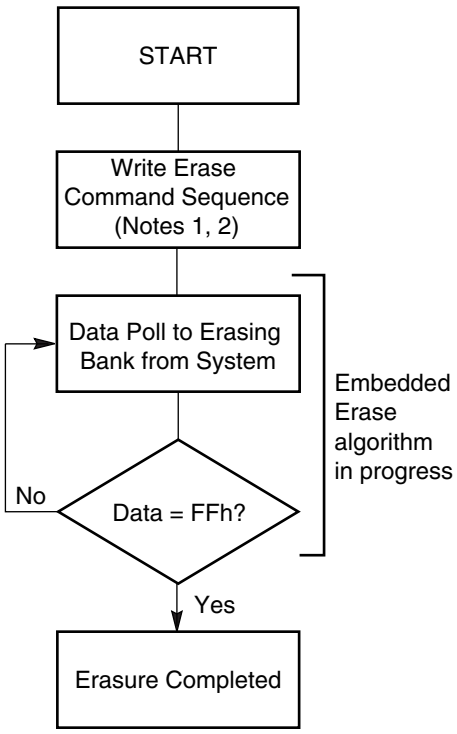

Notes:

1. *See Table 14 for erase command sequence.*
2. *See the section on DQ3 for information on the sector erase timer.*

Figure 4. Erase Operation

Table 14. Command Definitions

Command Sequence (Note 1)			Cycles	Bus Cycles (Notes 2–5)											
				First		Second		Third		Fourth		Fifth		Sixth	
				Addr	Data	Addr	Data	Addr	Data	Addr	Data	Addr	Data	Addr	Data
Read (Note 6)			1	RA	RD										
Reset (Note 7)			1	XXX	F0										
Autoselect (Note 8)	Manufacturer ID	Word	4	555	AA	2AA	55	(BA)555	90	(BA)X00	01				
	Device ID	Word	4	555	AA	2AA	55	(BA)555	90	(BA)X01	see Table 15				
	SecSi Sector Factory Protect (Note 9)	Word	4	555	AA	2AA	55	(BA)555	90	(BA)X03	81/01				
	Sector Protect Verify (Note 10)	Word	4	555	AA	2AA	55	(BA)555	90	(SA)X02	00/01				
Enter SecSi Sector Region		Word	3	555	AA	2AA	55	555	88						
Exit SecSi Sector Region		Word	4	555	AA	2AA	55	555	90	XXX	00				
Program		Word	4	555	AA	2AA	55	555	A0	PA	PD				
Unlock Bypass		Word	3	555	AA	2AA	55	555	20						
Unlock Bypass Program (Note 11)			2	XXX	A0	PA	PD								
Unlock Bypass Reset (Note 12)			2	XXX	90	XXX	00								
Chip Erase		Word	6	555	AA	2AA	55	555	80	555	AA	2AA	55	555	10
Sector Erase		Word	6	555	AA	2AA	55	555	80	555	AA	2AA	55	SA	30
Erase Suspend (Note 13)			1	BA	B0										
Erase Resume (Note 14)			1	BA	30										
CFI Query (Note 15)		Word	1	55	98										

Legend:

X = Don't care

RA = Address of the memory location to be read.

RD = Data read from location RA during read operation.

PA = Address of the memory location to be programmed. Addresses latch on the falling edge of the WE# or CE#f pulse, whichever happens later.

PD = Data to be programmed at location PA. Data latches on the rising edge of WE# or CE#f pulse, whichever happens first.

SA = Address of the sector to be verified (in autoselect mode) or erased. Address bits A19–A12 uniquely select any sector.

BA = Address of the bank that is being switched to autoselect mode, is in bypass mode, or is being erased.

Notes:

1. *See Table 1 for description of bus operations.*
2. *All values are in hexadecimal.*
3. *Except for the read cycle and the fourth cycle of the autoselect command sequence, all bus cycles are write cycles.*
4. *Data bits DQ15–DQ8 are don't care in command sequences, except for RD and PD.*
5. *Unless otherwise noted, address bits A19–A11 are don't cares.*
6. *No unlock or command cycles required when bank is in read mode.*
7. *The Reset command is required to return to reading array data (or to the erase-suspend-read mode if previously in Erase Suspend) when a bank is in the autoselect mode, or if DQ5 goes high (while the bank is providing status information).*
8. *The fourth cycle of the autoselect command sequence is a read cycle. The system must provide the bank address to obtain the manufacturer ID, device ID, or SecSi Sector factory protect information. Data bits DQ15–DQ8 are don't care. See the Autoselect Command Sequence section for more information.*
9. *The data is 80h for factory locked and 00h for not factory locked.*
10. *The data is 00h for an unprotected sector/sector block and 01h for a protected sector/sector block.*
11. *The Unlock Bypass command is required prior to the Unlock Bypass Program command.*
12. *The Unlock Bypass Reset command is required to return to reading array data when the bank is in the unlock bypass mode.*
13. *The system may read and program in non-erasing sectors, or enter the autoselect mode, when in the Erase Suspend mode. The Erase Suspend command is valid only during a sector erase operation, and requires the bank address.*
14. *The Erase Resume command is valid only during the Erase Suspend mode, and requires the bank address.*
15. *Command is valid when device is ready to read array data or when device is in autoselect mode.*

Table 15. Autoselect Device ID Codes

Device	Autoselect Device ID
Am29DL161D	36h (T), 39h (B)
Am29DL162D	2Dh (T), 2Eh (B)
Am29DL163D	28h (T), 2Bh (B)
Am29DL164D	33h (T), 35h (B)

T = Top Boot Sector, B = Bottom Boot Sector

WRITE OPERATION STATUS

The device provides several bits to determine the status of a program or erase operation: DQ2, DQ3, DQ5, DQ6, and DQ7. Table 16 and the following subsections describe the function of these bits. DQ7 and DQ6 each offer a method for determining whether a program or erase operation is complete or in progress. The device also provides a hardware-based output signal, RY/BY#, to determine whether an Embedded Program or Erase operation is in progress or has been completed.

DQ7: Data# Polling

The Data# Polling bit, DQ7, indicates to the host system whether an Embedded Program or Erase algorithm is in progress or completed, or whether a bank is in Erase Suspend. Data# Polling is valid after the rising edge of the final WE# pulse in the command sequence.

During the Embedded Program algorithm, the device outputs on DQ7 the complement of the datum programmed to DQ7. This DQ7 status also applies to programming during Erase Suspend. When the Embedded Program algorithm is complete, the device outputs the datum programmed to DQ7. The system must provide the program address to read valid status information on DQ7. If a program address falls within a protected sector, Data# Polling on DQ7 is active for approximately 1 µs, then that bank returns to reading array data.

During the Embedded Erase algorithm, Data# Polling produces a “0” on DQ7. When the Embedded Erase algorithm is complete, or if the bank enters the Erase Suspend mode, Data# Polling produces a “1” on DQ7. The system must provide an address within any of the sectors selected for erasure to read valid status information on DQ7.

After an erase command sequence is written, if all sectors selected for erasing are protected, Data# Polling on DQ7 is active for approximately 100 µs, then the bank returns to reading array data. If not all selected sectors are protected, the Embedded Erase algorithm erases the unprotected sectors, and ignores the selected sectors that are protected. However, if the system reads DQ7 at an address within a protected sector, the status may not be valid.

Just prior to the completion of an Embedded Program or Erase operation, DQ7 may change asynchronously with DQ0–DQ6 while Output Enable (OE#) is asserted low. That is, the device may change from providing status information to valid data on DQ7. Depending on when the system samples the DQ7 output, it may read the status or valid data. Even if the device has completed the program or erase operation and DQ7 has valid data, the data outputs on DQ0–DQ6 may be still invalid. Valid data on DQ0–DQ7 will appear on successive read cycles.

Table 16 shows the outputs for Data# Polling on DQ7. Figure 5 shows the Data# Polling algorithm. Figure 22 in the AC Characteristics section shows the Data# Polling timing diagram.

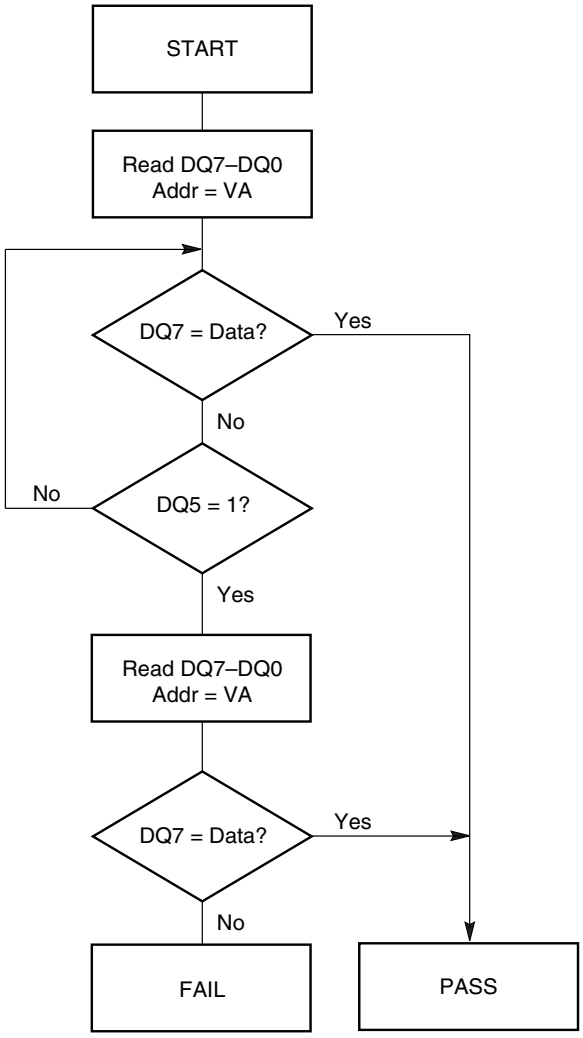

Notes:

1. *VA = Valid address for programming. During a sector erase operation, a valid address is any sector address within the sector being erased. During chip erase, a valid address is any non-protected sector address.*
2. *DQ7 should be rechecked even if DQ5 = “1” because DQ7 may change simultaneously with DQ5.*

Figure 5. Data# Polling Algorithm

RY/BY#: Ready/Busy#

The RY/BY# is a dedicated, open-drain output pin which indicates whether an Embedded Algorithm is in progress or complete. The RY/BY# status is valid after the rising edge of the final WE# pulse in the command sequence. Since RY/BY# is an open-drain output, several RY/BY# pins can be tied together in parallel with a pull-up resistor to V_{CC}.

If the output is low (Busy), the device is actively erasing or programming. (This includes programming in the Erase Suspend mode.) If the output is high (Ready), the device is reading array data, the standby mode, or one of the banks is in the erase-suspend-read mode.

Table 16 shows the outputs for RY/BY#.

DQ6: Toggle Bit I

Toggle Bit I on DQ6 indicates whether an Embedded Program or Erase algorithm is in progress or complete, or whether the device has entered the Erase Suspend mode. Toggle Bit I may be read at any address, and is valid after the rising edge of the final WE# pulse in the command sequence (prior to the program or erase operation), and during the sector erase time-out.

During an Embedded Program or Erase algorithm operation, successive read cycles to any address cause DQ6 to toggle. The system may use either OE# or CE#f to control the read cycles. When the operation is complete, DQ6 stops toggling.

After an erase command sequence is written, if all sectors selected for erasing are protected, DQ6 toggles for approximately 100 µs, then returns to reading array data. If not all selected sectors are protected, the Embedded Erase algorithm erases the unprotected sectors, and ignores the selected sectors that are protected.

The system can use DQ6 and DQ2 together to determine whether a sector is actively erasing or is erase-suspended. When the device is actively erasing (that is, the Embedded Erase algorithm is in progress), DQ6 toggles. When the device enters the Erase Suspend mode, DQ6 stops toggling. However, the system must also use DQ2 to determine which sectors are erasing or erase-suspended. Alternatively, the system can use DQ7 (see the subsection on DQ7: Data# Polling).

If a program address falls within a protected sector, DQ6 toggles for approximately 1 µs after the program command sequence is written, then returns to reading array data.

DQ6 also toggles during the erase-suspend-program mode, and stops toggling once the Embedded Program algorithm is complete.

Table 16 shows the outputs for Toggle Bit I on DQ6. Figure 6 shows the toggle bit algorithm. Figure 23 in the “AC Characteristics” section shows the toggle bit timing diagrams. Figure 24 shows the differences between DQ2 and DQ6 in graphical form. See also the subsection on DQ2: Toggle Bit II.

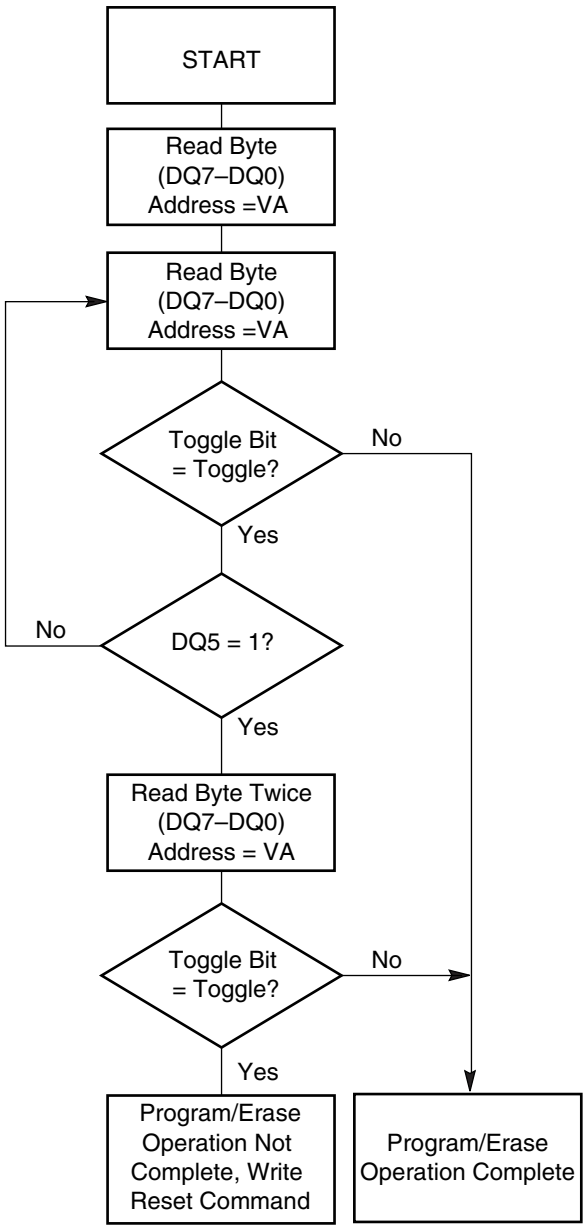

Note: *The system should recheck the toggle bit even if DQ5 = “1” because the toggle bit may stop toggling as DQ5 changes to “1.” See the subsections on DQ6 and DQ2 for more information.*

Figure 6. Toggle Bit Algorithm

DQ2: Toggle Bit II

The “Toggle Bit II” on DQ2, when used with DQ6, indicates whether a particular sector is actively erasing (that is, the Embedded Erase algorithm is in progress), or whether that sector is erase-suspended. Toggle Bit II is valid after the rising edge of the final WE# pulse in the command sequence.

DQ2 toggles when the system reads at addresses within those sectors that have been selected for erasure. (The system may use either OE# or CE#f to control the read cycles.) But DQ2 cannot distinguish whether the sector is actively erasing or is erase-suspended. DQ6, by comparison, indicates whether the device is actively erasing, or is in Erase Suspend, but cannot distinguish which sectors are selected for erasure. Thus, both status bits are required for sector and mode information. Refer to Table 16 to compare outputs for DQ2 and DQ6.

Figure 6 shows the toggle bit algorithm in flowchart form, and the section “DQ2: Toggle Bit II” explains the algorithm. See also the DQ6: Toggle Bit I subsection. Figure 23 shows the toggle bit timing diagram. Figure 24 shows the differences between DQ2 and DQ6 in graphical form.

Reading Toggle Bits DQ6/DQ2

Refer to Figure 6 for the following discussion. Whenever the system initially begins reading toggle bit status, it must read DQ7–DQ0 at least twice in a row to determine whether a toggle bit is toggling. Typically, the system would note and store the value of the toggle bit after the first read. After the second read, the system would compare the new value of the toggle bit with the first. If the toggle bit is not toggling, the device has completed the program or erase operation. The system can read array data on DQ7–DQ0 on the following read cycle.

However, if after the initial two read cycles, the system determines that the toggle bit is still toggling, the system also should note whether the value of DQ5 is high (see the section on DQ5). If it is, the system should then determine again whether the toggle bit is toggling, since the toggle bit may have stopped toggling just as DQ5 went high. If the toggle bit is no longer toggling, the device has successfully completed the program or erase operation. If it is still toggling, the device did not completed the operation successfully, and the system must write the reset command to return to reading array data.

The remaining scenario is that the system initially determines that the toggle bit is toggling and DQ5 has not gone high. The system may continue to monitor the toggle bit and DQ5 through successive read cycles, determining the status as described in the previous paragraph. Alternatively, it may choose to perform other system tasks. In this case, the system must start at the beginning of the algorithm when it returns to determine the status of the operation (top of Figure 6).

DQ5: Exceeded Timing Limits

DQ5 indicates whether the program or erase time has exceeded a specified internal pulse count limit. Under these conditions DQ5 produces a “1,” indicating that the program or erase cycle was not successfully completed.

The device may output a “1” on DQ5 if the system tries to program a “1” to a location that was previously programmed to “0.” **Only an erase operation can change a “0” back to a “1.”** Under this condition, the device halts the operation, and when the timing limit has been exceeded, DQ5 produces a “1.”

Under both these conditions, the system must write the reset command to return to reading array data (or to the erase-suspend-read mode if a bank was previously in the erase-suspend-program mode).

DQ3: Sector Erase Timer

After writing a sector erase command sequence, the system may read DQ3 to determine whether or not erasure has begun. (The sector erase timer does not apply to the chip erase command.) If additional sectors are selected for erasure, the entire time-out also applies after each additional sector erase command. When the time-out period is complete, DQ3 switches from a “0” to a “1.” If the time between additional sector erase commands from the system can be assumed to be less than 50 µs, the system need not monitor DQ3. See also the Sector Erase Command Sequence section.

After the sector erase command is written, the system should read the status of DQ7 (Data# Polling) or DQ6 (Toggle Bit I) to ensure that the device has accepted the command sequence, and then read DQ3. If DQ3 is “1,” the Embedded Erase algorithm has begun; all further commands (except Erase Suspend) are ignored until the erase operation is complete. If DQ3 is “0,” the device will accept additional sector erase commands. To ensure the command has been accepted, the system software should check the status of DQ3 prior to and following each subsequent sector erase command. If DQ3 is high on the second status check, the last command might not have been accepted.

Table 16 shows the status of DQ3 relative to the other status bits.

Table 16. Write Operation Status

Status			DQ7 (Note 2)	DQ6	DQ5 (Note 1)	DQ3	DQ2 (Note 2)	RY/BY#
Standard Mode	Embedded Program Algorithm		DQ7#	Toggle	0	N/A	No toggle	0
	Embedded Erase Algorithm		0	Toggle	0	1	Toggle	0
Erase Suspend Mode	Erase-Suspend-Read	Erase Suspended Sector	1	No toggle	0	N/A	Toggle	1
		Non-Erase Suspended Sector	Data	Data	Data	Data	Data	1
	Erase-Suspend-Program		DQ7#	Toggle	0	N/A	N/A	0

Notes:

1. *DQ5 switches to '1' when an Embedded Program or Embedded Erase operation has exceeded the maximum timing limits. Refer to the section on DQ5 for more information.*
2. *DQ7 and DQ2 require a valid address when reading status information. Refer to the appropriate subsection for further details.*
3. *When reading write operation status bits, the system must always provide the bank address where the Embedded Algorithm is in progress. The device outputs array data if the system addresses a non-busy bank.*

ABSOLUTE MAXIMUM RATINGS

Storage Temperature
Plastic Packages . . . . . –55°C to +125°C

Ambient Temperature
with Power Applied. . . . . –40°C to +85°C

Voltage with Respect to Ground

V_{CC}f/V_{CC}s (Note 1) . . . . . –0.3 V to +4.0 V

OE# and RESET#
(Note 2). . . . . –0.5 V to +12.5 V

WP#/ACC . . . . . –0.5 V to +10.5 V

All other pins (Note 1) . . . . . –0.5 V to V_{CC} +0.5 V

Output Short Circuit Current (Note 3) . . . . . 200 mA

Notes:

1. *Minimum DC voltage on input or I/O pins is –0.5 V. During voltage transitions, input or I/O pins may overshoot V_{SS} to –2.0 V for periods of up to 20 ns. Maximum DC voltage on input or I/O pins is V_{CC} +0.5 V. See Figure 7. During voltage transitions, input or I/O pins may overshoot to V_{CC} +2.0 V for periods up to 20 ns. See Figure 8.*
2. *Minimum DC input voltage on pins OE#, RESET#, and WP#/ACC is –0.5 V. During voltage transitions, OE#, WP#/ACC, and RESET# may overshoot V_{SS} to –2.0 V for periods of up to 20 ns. See Figure 7. Maximum DC input voltage on pin RESET# is +12.5 V which may overshoot to +14.0 V for periods up to 20 ns. Maximum DC input voltage on WP#/ACC is +9.5 V which may overshoot to +12.0 V for periods up to 20 ns.*
3. *No more than one output may be shorted to ground at a time. Duration of the short circuit should not be greater than one second.*

Stresses above those listed under "Absolute Maximum Ratings" may cause permanent damage to the device. This is a stress rating only; functional operation of the device at these or any other conditions above those indicated in the operational sections of this data sheet is not implied. Exposure of the device to absolute maximum rating conditions for extended periods may affect device reliability.

OPERATING RANGES

Industrial (I) Devices

Ambient Temperature (T_A). . . . . .–40°C to +85°C

V_{CC}f/V_{CC}s Supply Voltage

V_{CC}f/V_{CC}s for standard voltage range . . 2.7 V to 3.3 V

Operating ranges define those limits between which the functionality of the device is guaranteed.

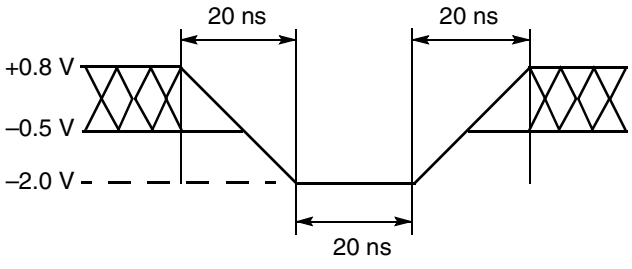

Figure 7. Maximum Negative Overshoot Waveform

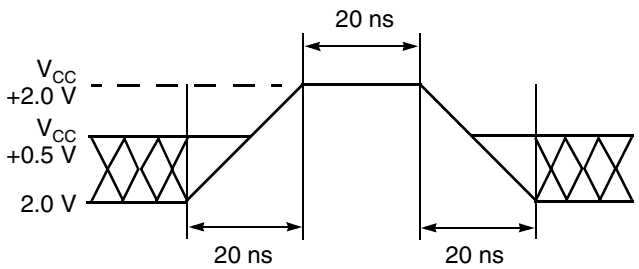

Figure 8. Maximum Positive Overshoot Waveform

DC CHARACTERISTICS

CMOS Compatible

Parameter Symbol	Parameter Description	Test Conditions		Min	Typ	Max	Unit
I_{LI}	Input Load Current	$V_{IN} = V_{SS}$ to V_{CC}, $V_{CC} = V_{CC\ max}$				±1.0	µA
I_{LIT}	RESET# Input Load Current	$V_{CC} = V_{CC\ max}$; RESET# = 12.5 V				35	µA
I_{LO}	Output Leakage Current	$V_{OUT} = V_{SS}$ to V_{CC}, $V_{CC} = V_{CC\ max}$				±1.0	µA
I_{LIA}	ACC Input Leakage Current	$V_{CC} = V_{CC\ max}$, WP#/ACC = $V_{ACC\ max}$				35	µA
$I_{CC1}f$	Flash V_{CC} Active Read Current (Notes 1, 2)	CE#f = V_{IL}, OE# = V_{IH}, Word Mode	5 MHz		10	16	mA
			1 MHz		2	4	
$I_{CC2}f$	Flash V_{CC} Active Write Current (Notes 2, 3)	CE#f = V_{IL}, OE# = V_{IH}, WE# = V_{IL}			15	30	mA
$I_{CC3}f$	Flash V_{CC} Standby Current (Note 2)	$V_{CC}f = V_{CC\ max}$, CE#f, RESET#, WP#/ACC = $V_{CC}f \pm 0.3$ V			0.2	5	µA
$I_{CC4}f$	Flash V_{CC} Reset Current (Note 2)	$V_{CC}f = V_{CC\ max}$, RESET# = $V_{SS} \pm 0.3$ V, WP#/ACC = $V_{CC}f \pm 0.3$ V			0.2	5	µA
$I_{CC5}f$	Flash V_{CC} Current Automatic Sleep Mode (Notes 2, 4)	$V_{CC}f = V_{CC\ max}$, $V_{IH} = V_{CC} \pm 0.3$ V; $V_{IL} = V_{SS} \pm 0.3$ V			0.2	5	µA
$I_{CC6}f$	Flash V_{CC} Active Read-While-Program Current (Notes 1, 2)	CE#f = V_{IL}, OE# = V_{IH}			21	45	mA
$I_{CC7}f$	Flash V_{CC} Active Read-While-Erase Current (Notes 1, 2)	CE#f = V_{IL}, OE# = V_{IH}			21	45	mA
$I_{CC8}f$	Flash V_{CC} Active Program-While-Erase-Suspended Current (Notes 2, 5)	CE#f = V_{IL}, OE#f = V_{IH}			17	35	mA
I_{ACC}	ACC Accelerated Program Current	CE#f = V_{IL}, OE# = V_{IH}	ACC pin		5	10	mA
			V_{CC} pin		15	30	mA
$I_{CC4}s$	SRAM V_{CC} Standby Current	CE1#s ≥ $V_{CC}s$ – 0.2V, CE2s ≥ $V_{CC}s$ – 0.2V				10	µA
$I_{CC5}s$	SRAM V_{CC} Standby Current	CE2s ≤ 0.2V				10	µA
V_{IL}	Input Low Voltage			–0.2		0.8	V
V_{IH}	Input High Voltage			2.4		V_{CC} + 0.2	V
V_{HH}	Voltage for WP#/ACC Program Acceleration and Sector Protection/Unprotection			8.5		9.5	V
V_{ID}	Voltage for Sector Protection, Autoselect and Temporary Sector Unprotect			8.5		12.5	V
V_{OL}	Output Low Voltage	I_{OL} = 4.0 mA, $V_{CC}f = V_{CC}s = V_{CC\ min}$				0.45	V
V_{OH1}	Output High Voltage	I_{OH} = –2.0 mA, $V_{CC}f = V_{CC}s = V_{CC\ min}$		0.85 x V_{CC}			V
V_{OH2}		I_{OH} = –100 µA, $V_{CC} = V_{CC\ min}$		V_{CC}–0.4			

DC CHARACTERISTICS (Continued)

CMOS Compatible

Parameter Symbol	Parameter Description	Test Conditions	Min	Typ	Max	Unit
V_{LKO}	Flash Low V_{CC} Lock-Out Voltage (Note 5)		2.3		2.5	V

Notes:

1. *The I_{CC} current listed is typically less than 2 mA/MHz, with OE# at V_{IH}.*
2. *Maximum I_{CC} specifications are tested with $V_{CC} = V_{CC}$max.*
3. *I_{CC} active while Embedded Erase or Embedded Program is in progress.*
4. *Automatic sleep mode enables the low power mode when addresses remain stable for t_{ACC} + 30 ns. Typical sleep mode current is 200 nA.*
5. *Not 100% tested.*

SRAM DC AND OPERATING CHARACTERISTICS

Parameter Symbol	Parameter Description	Test Conditions	Min	Typ	Max	Unit
I_{LI}	Input Leakage Current	$V_{IN} = V_{SS}$ to V_{CC}	–1.0		1.0	µA
I_{LO}	Output Leakage Current	CE1#s = V_{IH}, CE2s = V_{IL} or OE# = V_{IH} or WE# = V_{IL}, V_{IO}= V_{SS} to V_{CC}	–1.0		1.0	µA
I_{CC1}s	Average Operating Current	Cycle time = 1 µs, 100% duty, I_{IO} = 0 mA, CE1#s ≤ 0.2 V, CE2 ≥ V_{CC} – 0.2 V, V_{IN} ≤ 0.2 V or V_{IN} ≥ V_{CC} – 0.2 V			2	mA
I_{CC2}s	Average Operating Current	Cycle time = Min., I_{IO} = 0 mA, 100% duty, CE1#s = V_{IL}, CE2s = V_{IH}, V_{IN} = V_{IL} = or V_{IH}			20	mA
V_{OL}	Output Low Voltage	I_{OL} = 2.1 mA			0.4	V
V_{OH}	Output High Voltage	I_{OH} = –1.0 mA	2.4			V
I_{SB1}	Standby Current (CMOS)	CE1#s ≥ V_{CC} – 0.2 V, CE2 ≥ V_{CC} – 0.2 V (CE1#s controlled) or 0 V ≤ CE2 ≤ 0.2 V (CE2s controlled), CIOs = V_{SS} or V_{CC}, Other input = 0 ~ V_{CC}			10	µA

DC CHARACTERISTICS

Zero-Power Flash

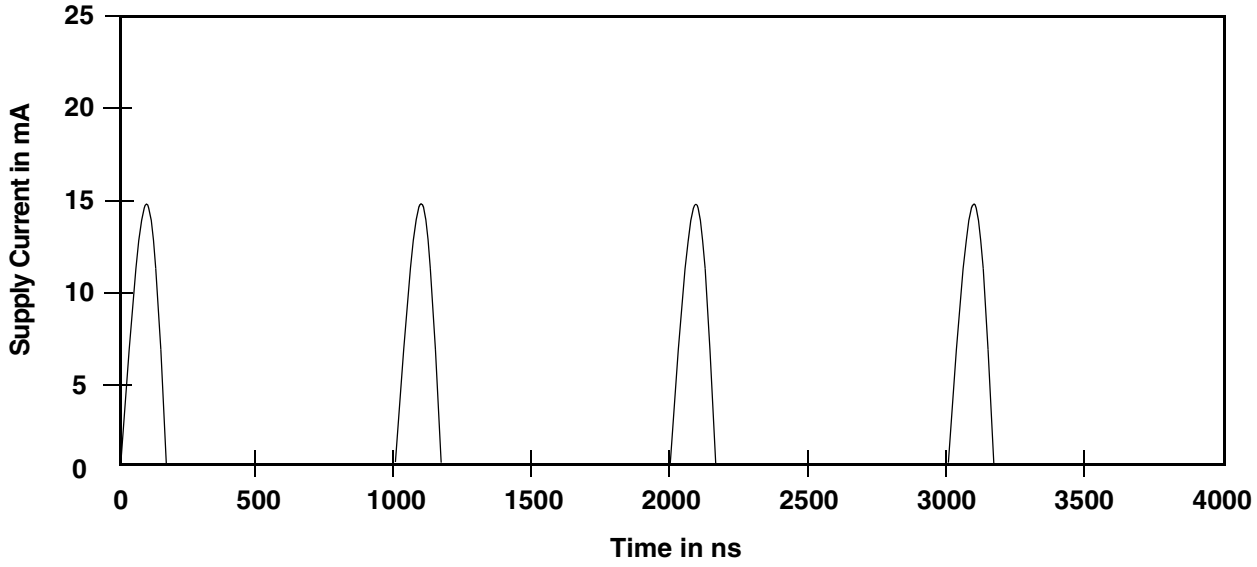

Note: *Addresses are switching at 1 MHz*

Figure 9. I_{CC1} Current vs. Time (Showing Active and Automatic Sleep Currents)

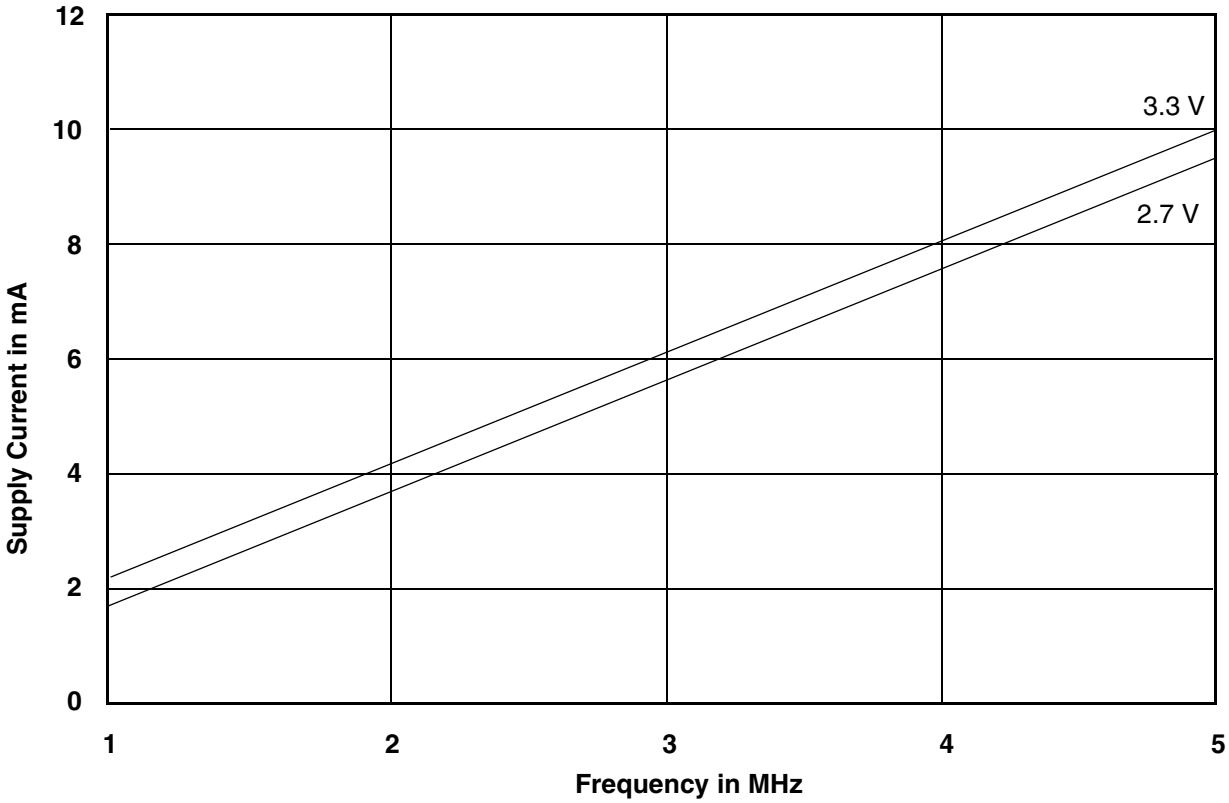

Note: *T = 25 °C*

Figure 10. Typical I_{CC1} vs. Frequency

TEST CONDITIONS

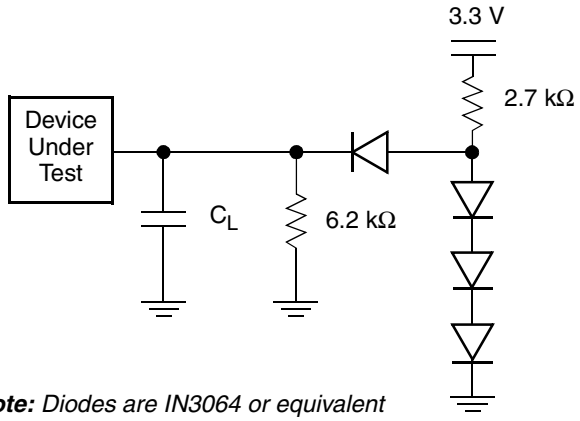

Note: *Diodes are IN3064 or equivalent*

Figure 11. Test Setup

Table 17. Test Specifications

Test Condition	70, 85 ns	Unit
Output Load	1 TTL gate	
Output Load Capacitance, C_L (including jig capacitance)	30	pF
Input Rise and Fall Times	5	ns
Input Pulse Levels	0.0–3.0	V
Input timing measurement reference levels	1.5	V
Output timing measurement reference levels	1.5	V

KEY TO SWITCHING WAVEFORMS

WAVEFORM	INPUTS	OUTPUTS
	Steady	
	Changing from H to L	
	Changing from L to H	
	Don't Care, Any Change Permitted	Changing, State Unknown
	Does Not Apply	Center Line is High Impedance State (High Z)

KS000010-PAL

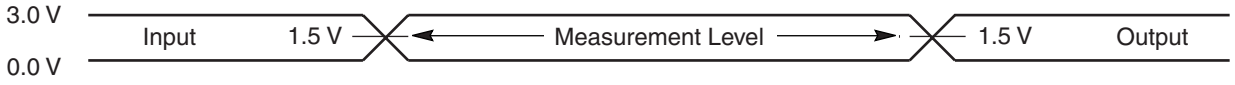

Figure 12. Input Waveforms and Measurement Levels

AC CHARACTERISTICS

SRAM CE#s Timing

Parameter		Description	Test Setup		All Speed Options	Unit
JEDEC	Std					
—	t_{CCR}	CE#s Recover Time	—	Min	0	ns

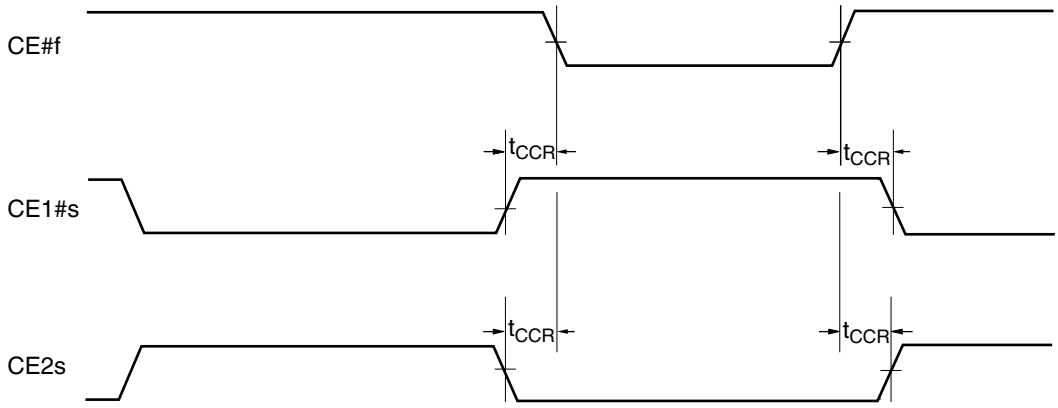

Figure 13. Timing Diagram for Alternating Between SRAM to Flash

AC CHARACTERISTICS

Flash Read-Only Operations

Parameter		Description		Test Setup		Speed Options		Unit
JEDEC	Std					70	85	
t_{AVAV}	t_{RC}	Read Cycle Time (Note 1)			Min	70	85	ns
t_{AVQV}	t_{ACC}	Address to Output Delay		CE#f, OE# = V_{IL}	Max	70	85	ns
t_{ELQV}	t_{CE}	Chip Enable to Output Delay		OE# = V_{IL}	Max	70	85	ns
t_{GLQV}	t_{OE}	Output Enable to Output Delay			Max	30	35	ns
t_{EHQZ}	t_{DF}	Chip Enable to Output High Z (Note 1)			Max	16		ns
t_{GHQZ}	t_{DF}	Output Enable to Output High Z (Note 1)			Max	16		ns
t_{AXQX}	t_{OH}	Output Hold Time From Addresses, CE#f or OE#, Whichever Occurs First			Min	0		ns
	t_{OEH}	Output Enable Hold Time (Note 1)	Read		Min	0		ns
			Toggle and Data# Polling		Min	10		ns

Notes:

1. *Not 100% tested.*
2. *See Figure 11 and Table 17 for test specifications.*

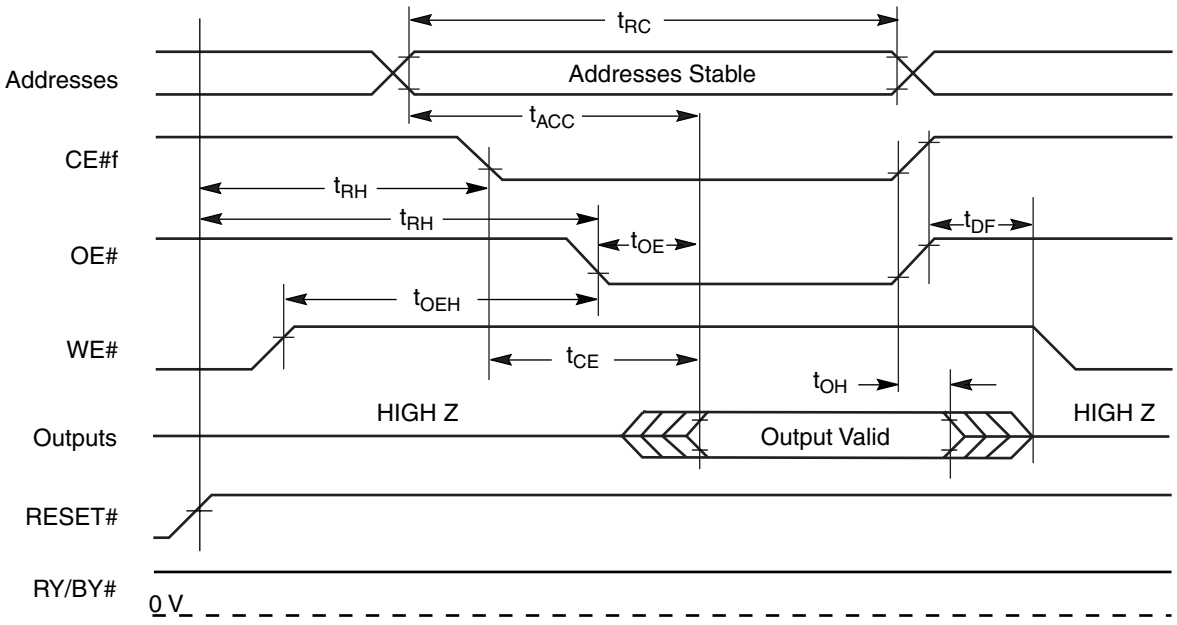

Figure 14. Read Operation Timings

AC CHARACTERISTICS

Hardware Reset (RESET#)

Parameter		Description		All Speed Options	Unit
JEDEC	Std				
	t_{Ready}	RESET# Pin Low (During Embedded Algorithms) to Read Mode (See Note)	Max	20	µs
	t_{Ready}	RESET# Pin Low (NOT During Embedded Algorithms) to Read Mode (See Note)	Max	500	ns
	t_{RP}	RESET# Pulse Width	Min	500	ns
	t_{RH}	Reset High Time Before Read (See Note)	Min	50	ns
	t_{RPD}	RESET# Low to Standby Mode	Min	20	µs
	t_{RB}	RY/BY# Recovery Time	Min	0	ns

Note: *Not 100% tested.*

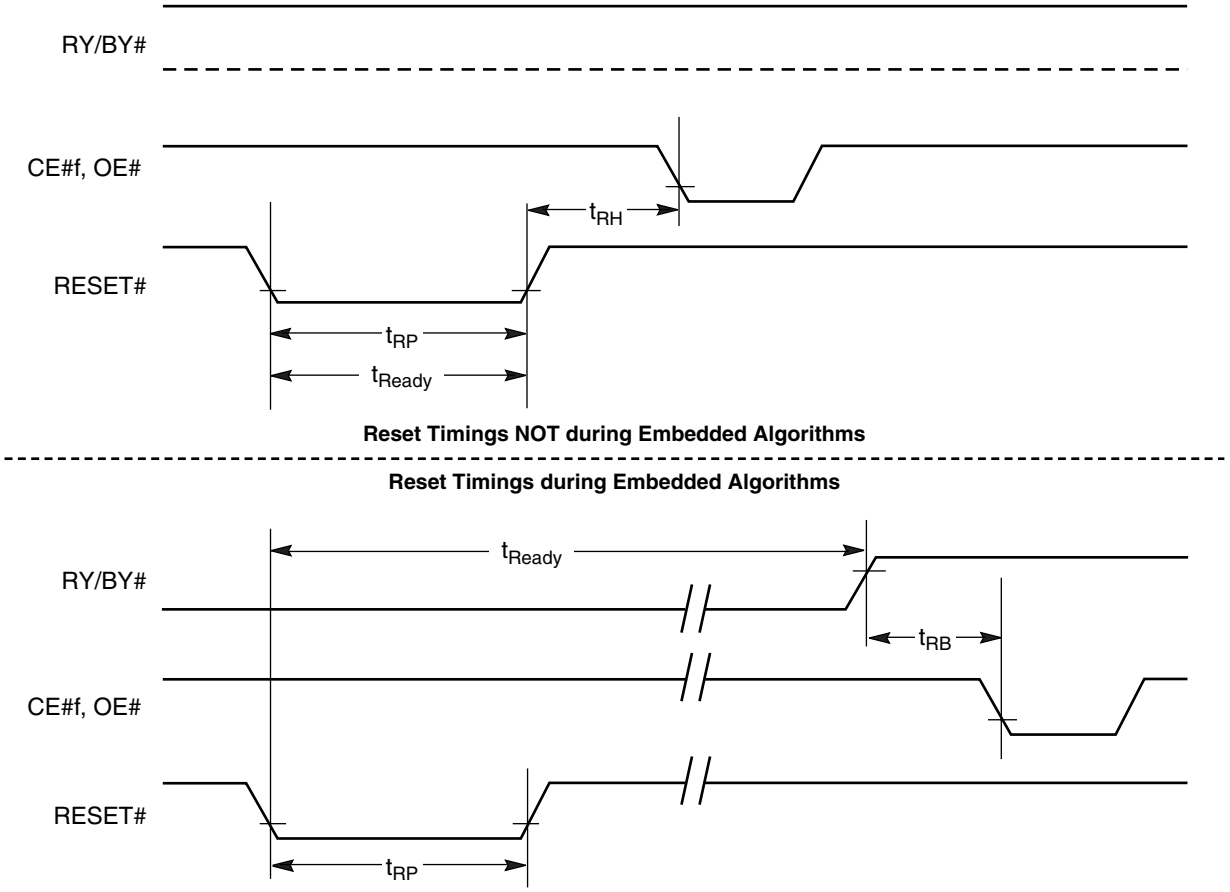

Figure 15. Reset Timings

AC CHARACTERISTICS

Flash Word/Byte Configuration (CIOf)

Parameter		Description		Speed Options		Unit
JEDEC	Std			70	85	
	t_{ELFL}/t_{ELFH}	CE#f to CIOf Switching Low or High	Max	5		ns
	t_{FLQZ}	CIOf Switching Low to Output HIGH Z	Max	25	30	ns
	t_{FHQV}	CIOf Switching High to Output Active	Min	70	85	ns

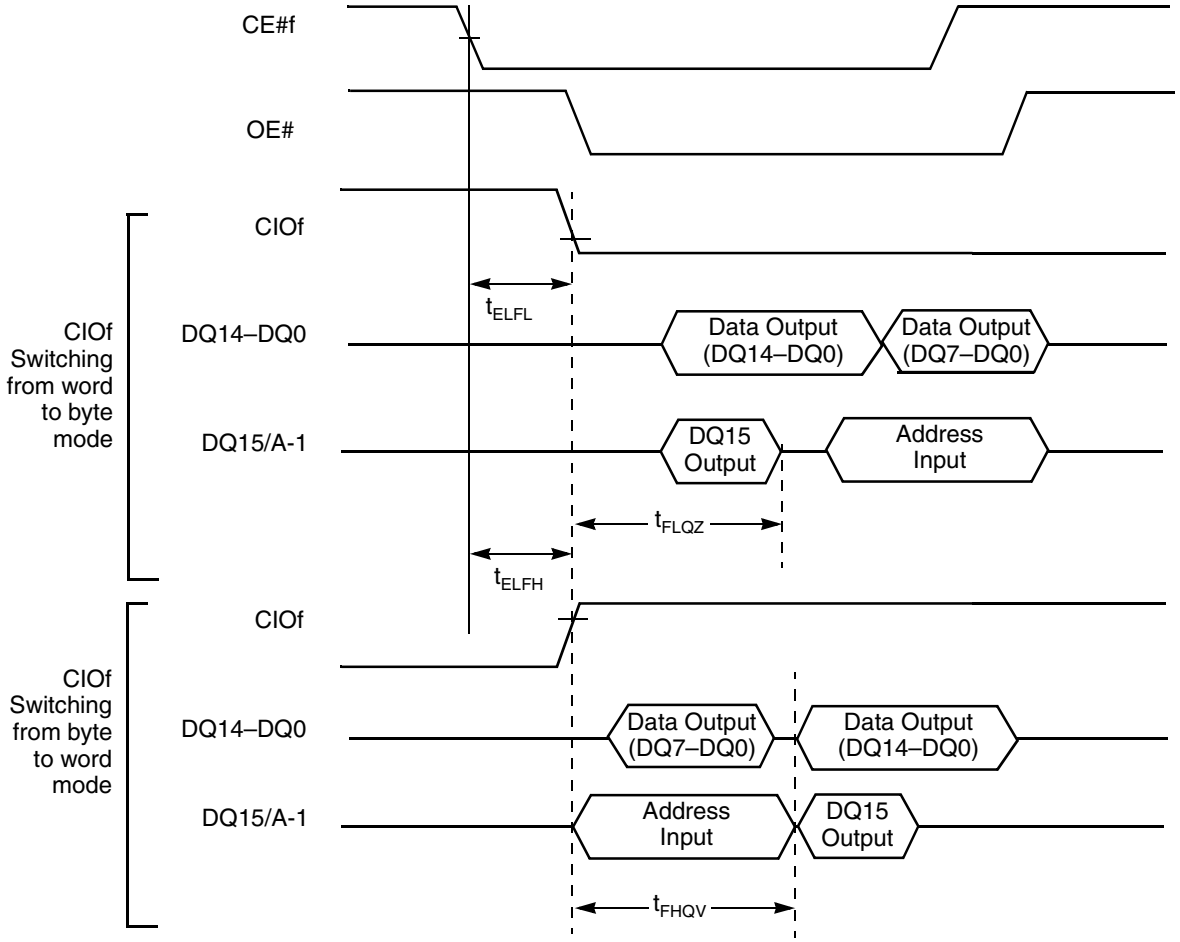

Figure 16. CIOf Timings for Read Operations

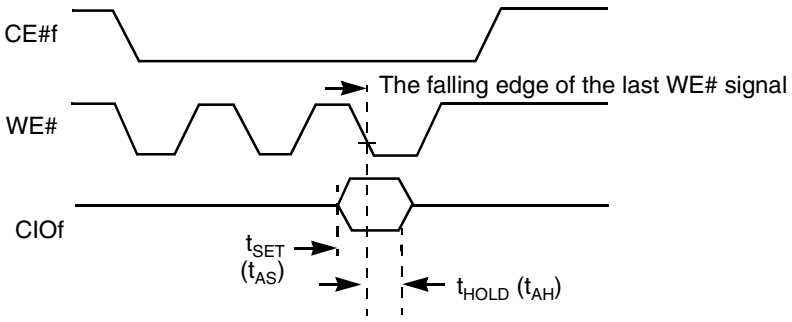

Note: *Refer to the Erase/Program Operations table for t_{AS} and t_{AH} specifications.*

Figure 17. CIOf Timings for Write Operations

AC CHARACTERISTICS

Flash Erase and Program Operations

Parameter					Speed Options		Unit
JEDEC	Std	Description		Min	70	85	
t_{AVAV}	t_{WC}	Write Cycle Time (Note 1)		Min	70	85	ns
t_{AVWL}	t_{AS}	Address Setup Time (WE# to Address)		Min	0		ns
	t_{ASO}	Address Setup Time to OE# or CE#f low during toggle bit polling		Min	15		ns
t_{WLAX}	t_{AH}	Address Hold Time (WE# to Address)		Min	45		ns
	t_{AHT}	Address Hold Time From CE#f or OE# high during toggle bit polling		Min	0		ns
t_{DVWH}	t_{DS}	Data Setup Time		Min	35		ns
t_{WHDX}	t_{DH}	Data Hold Time		Min	0		ns
	t_{OEH}	OE# Hold Time	Read	Min	0		ns
			Toggle and Data# Polling	Min	10		ns
	t_{OEPH}	Output Enable High during toggle bit polling		Min	20		ns
t_{GHEL}	t_{GHEL}	Read Recovery Time Before Write (OE# High to CE#f Low)		Min	0		ns
t_{GHWL}	t_{GHWL}	Read Recovery Time Before Write (OE# High to WE# Low)		Min	0		ns
t_{WLEL}	t_{WS}	WE# Setup Time (CE#f to WE#)		Min	0		ns
t_{ELWL}	t_{CS}	CE#f Setup Time (WE# to CE#f)		Min	0		ns
t_{EHWH}	t_{WH}	WE# Hold Time (CE#f to WE#)		Min	0		ns
t_{WHEH}	t_{CH}	CE#f Hold Time (CE#f to WE#)		Min	0		ns
t_{WLWH}	t_{WP}	Write Pulse Width		Min	30	35	ns
t_{ELEH}	t_{CP}	CE#f Pulse Width		Min	30	35	ns
t_{WHDL}	t_{WPH}	Write Pulse Width High		Min	0		ns
	$t_{SR/W}$	Latency Between Read and Write Operations		Min	0		ns
t_{WHWH1}	t_{WHWH1}	Programming Operation (Note 2)		Typ	7		µs
t_{WHWH1}	t_{WHWH1}	Accelerated Programming Operation (Note 2)		Typ	4		µs
t_{WHWH2}	t_{WHWH2}	Sector Erase Operation (Note 2)		Typ	0.7		sec
	t_{VCS}	V_{CC}f Setup Time (Note 1)		Min	50		µs
	t_{RB}	Write Recovery Time from RY/BY#		Min	0		ns
	t_{BUSY}	Program/Erase Valid to RY/BY# Delay		Max	90		ns

Notes:

1. *Not 100% tested.*
2. *See the "Flash Erase And Programming Performance" section for more information.*

AC CHARACTERISTICS

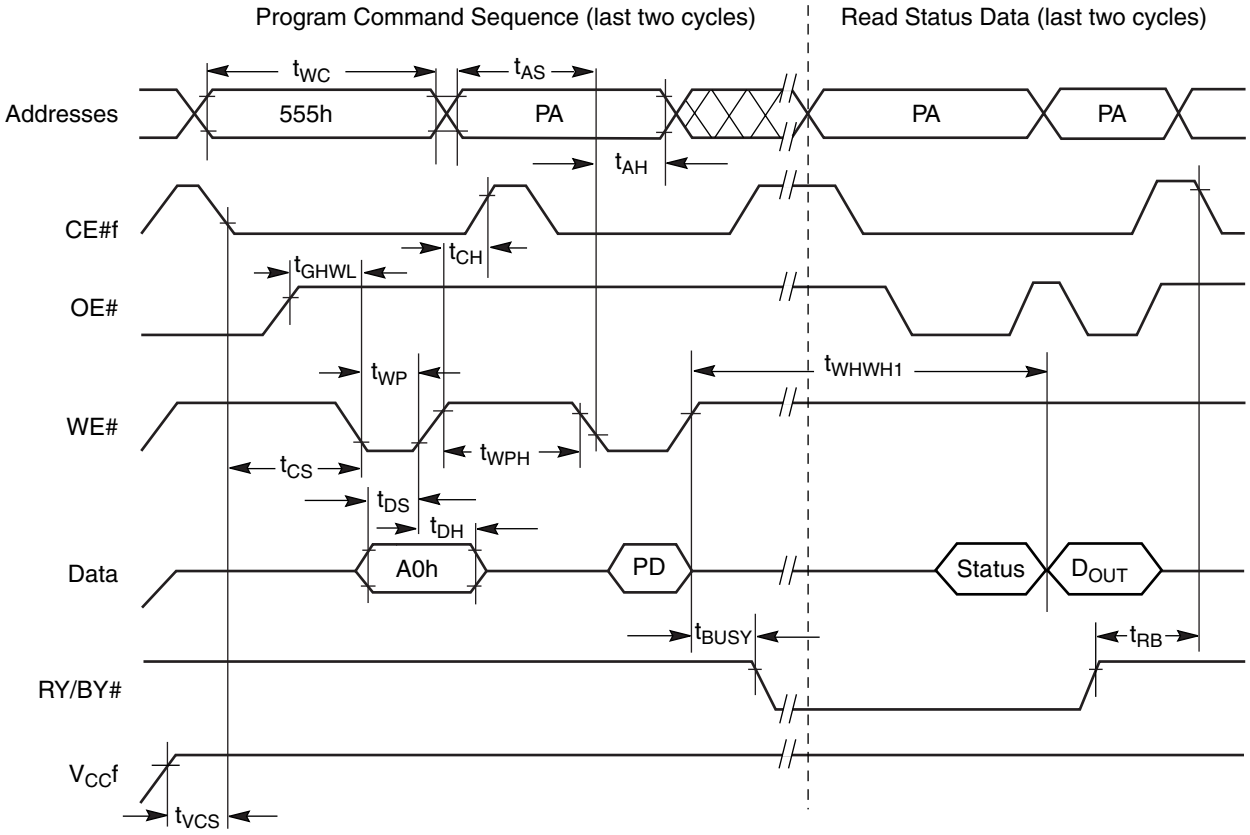

Notes:

1. *PA = program address, PD = program data, D_{OUT} is the true data at the program address.*
2. *Illustration shows device in word mode.*

Figure 18. Program Operation Timings

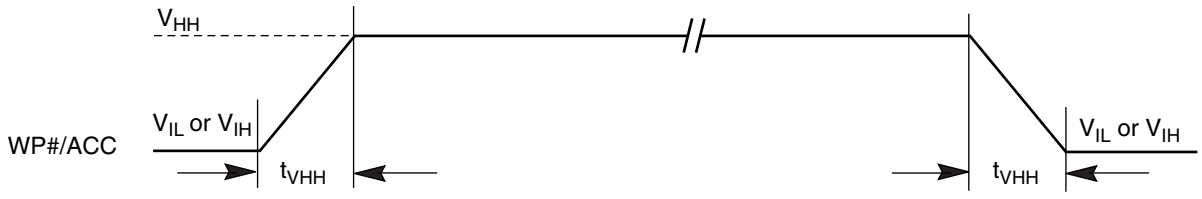

Figure 19. Accelerated Program Timing Diagram

AC CHARACTERISTICS

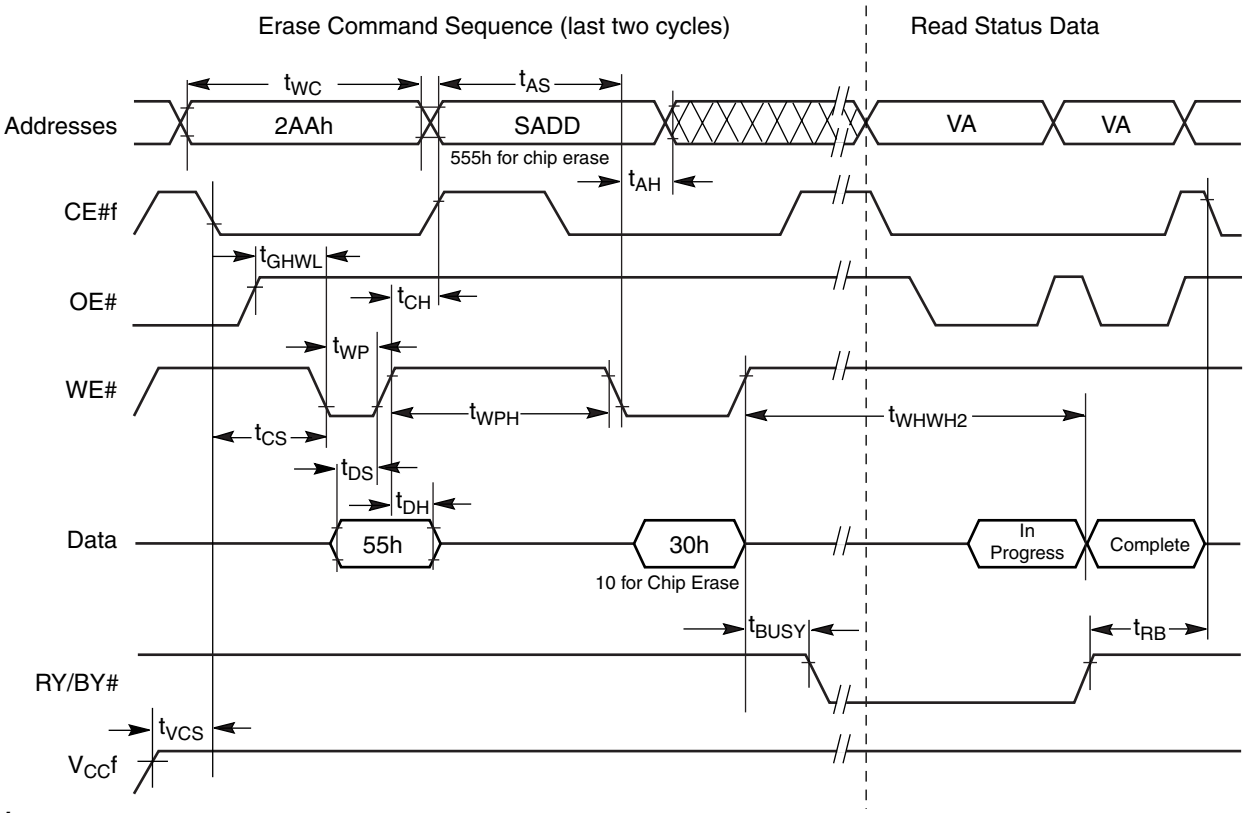

Notes:

1. *SA = sector address (for Sector Erase), VA = Valid Address for reading status data (see "Write Operation Status").*
2. *These waveforms are for the word mode.*

Figure 20. Chip/Sector Erase Operation Timings

AC CHARACTERISTICS

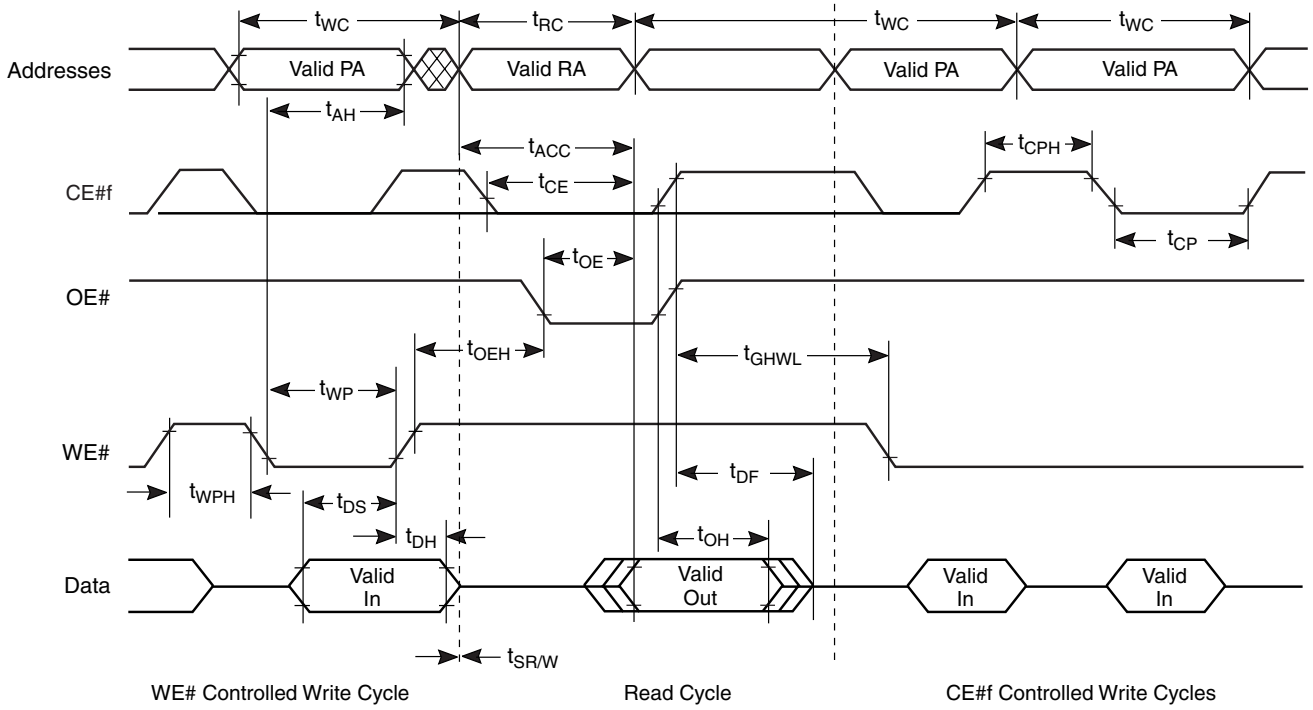

Figure 21. Back-to-back Read/Write Cycle Timings

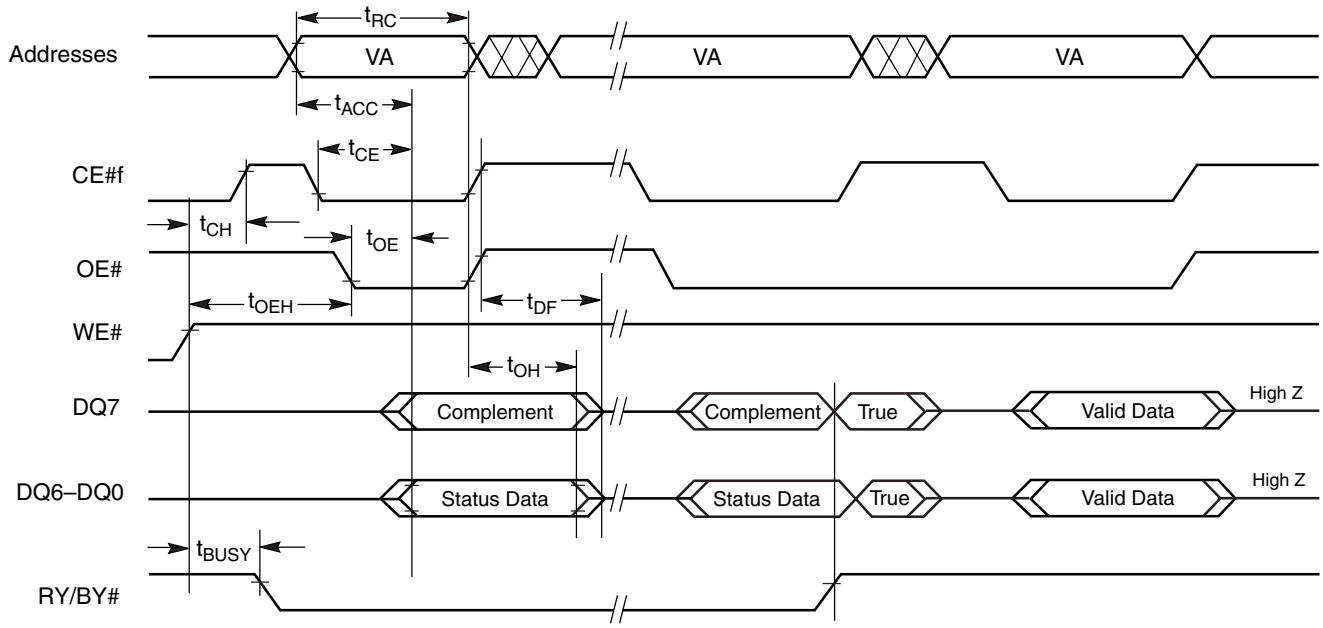

Note: *VA = Valid address. Illustration shows first status cycle after command sequence, last status read cycle, and array data read cycle.*

Figure 22. Data# Polling Timings (During Embedded Algorithms)

AC CHARACTERISTICS

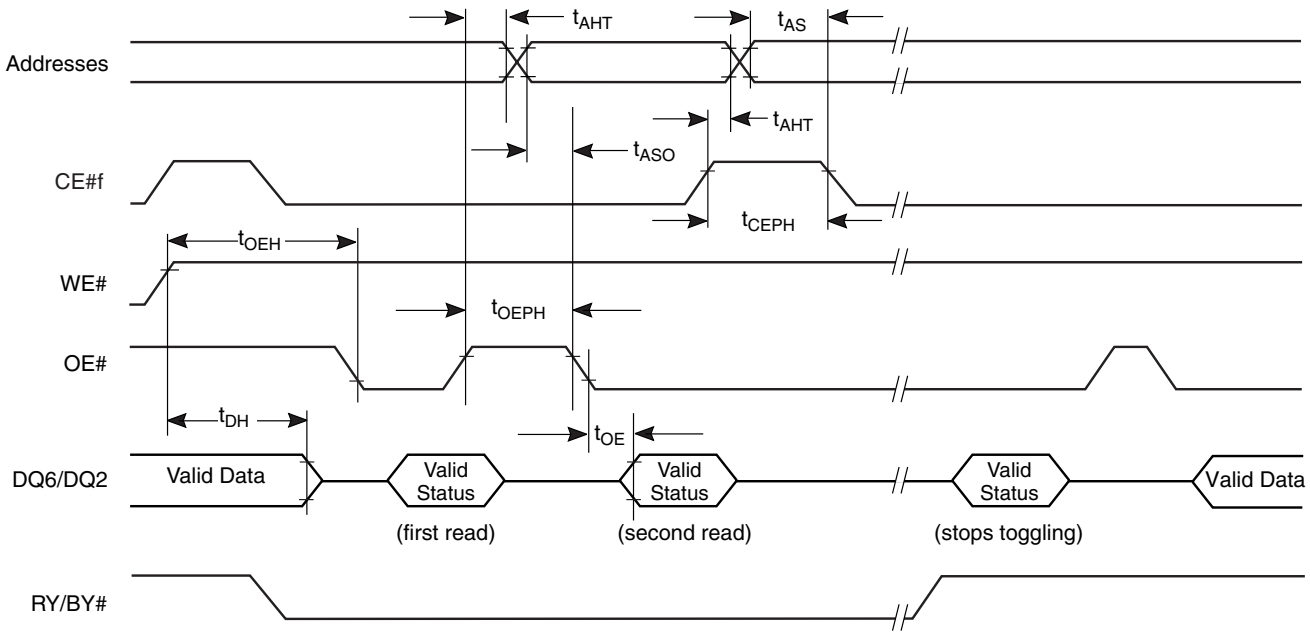

Note: *VA = Valid address; not required for DQ6. Illustration shows first two status cycle after command sequence, last status read cycle, and array data read cycle*

Figure 23. Toggle Bit Timings (During Embedded Algorithms)

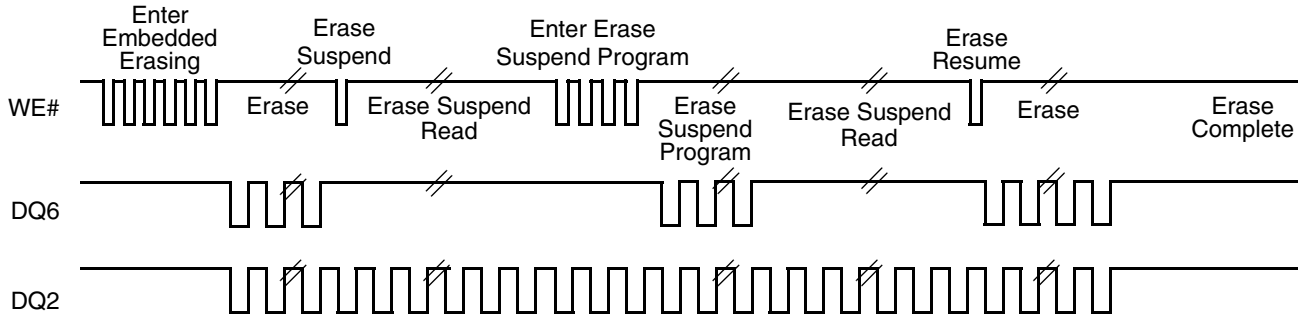

Note: *DQ2 toggles only when read at an address within an erase-suspended sector. The system may use OE# or CE#f to toggle DQ2 and DQ6.*

Figure 24. DQ2 vs. DQ6

AC CHARACTERISTICS

Temporary Sector/Sector Block Unprotect

Parameter		Description		All Speed Options	Unit
JEDEC	Std				
	t_{VIDR}	V_{ID} Rise and Fall Time (See Note)	Min	500	ns
	t_{VHH}	V_{HH} Rise and Fall Time (See Note)	Min	250	ns
	t_{RSP}	RESET# Setup Time for Temporary Sector/Sector Block Unprotect	Min	4	µs
	t_{RRB}	RESET# Hold Time from RY/BY# High for Temporary Sector/Sector Block Unprotect	Min	4	µs

Note: *Not 100% tested.*

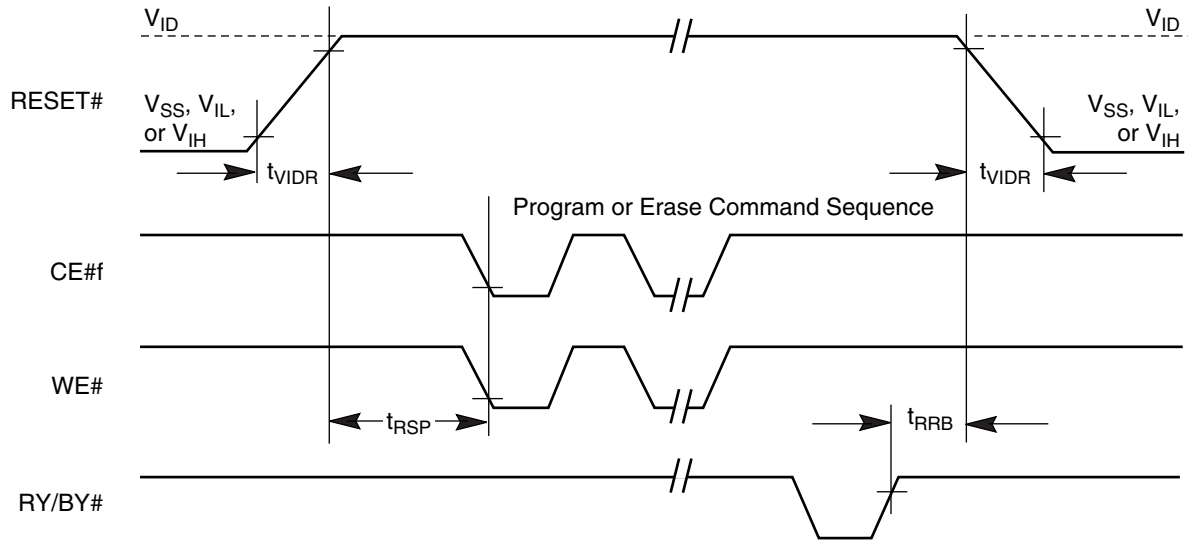

Figure 25. Temporary Sector/Sector Block Unprotect Timing Diagram

AC CHARACTERISTICS

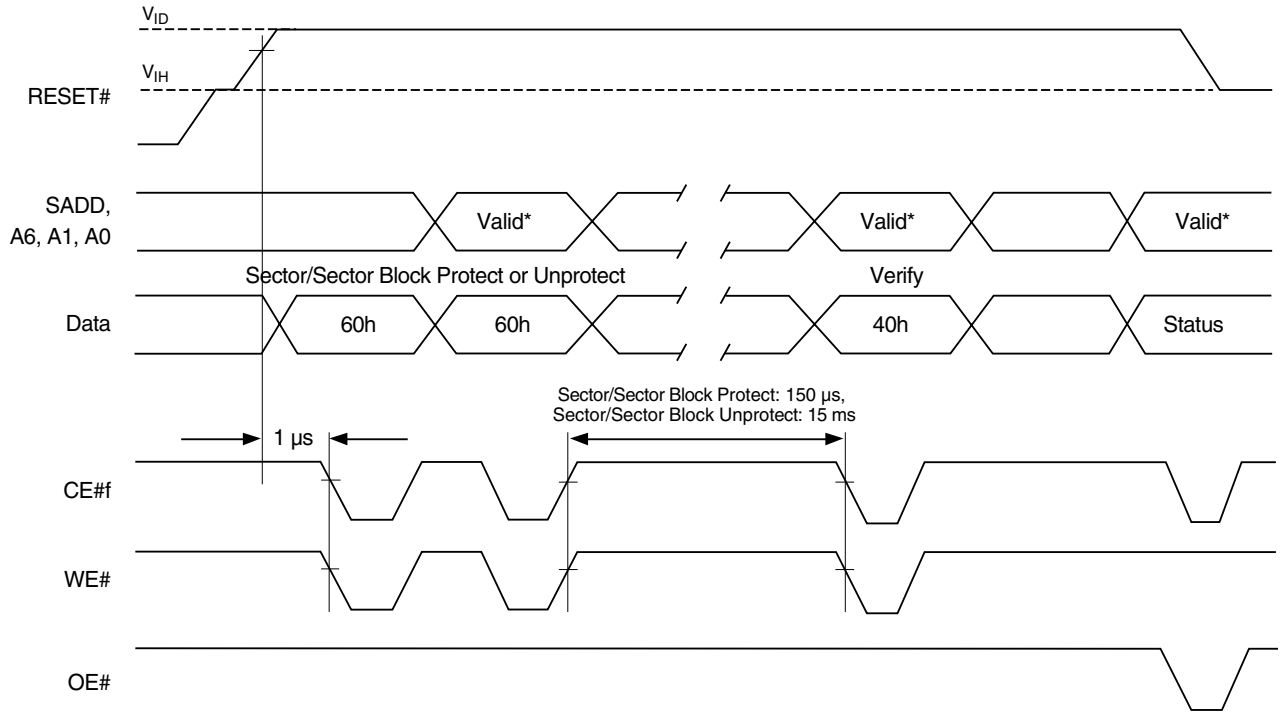

** For sector protect, A6 = 0, A1 = 1, A0 = 0. For sector unprotect, A6 = 1, A1 = 1, A0 = 0. SA = Sector Address*

Figure 26. Sector/Sector Block Protect and Unprotect Timing Diagram

AC CHARACTERISTICS

Alternate CE#f Controlled Erase and Program Operations

Parameter		Description		Speed Options		Unit
JEDEC	Std			70	85	
t_{AVAV}	t_{WC}	Write Cycle Time (Note 1)	Min	70	85	ns
t_{AVWL}	t_{AS}	Address Setup Time (WE# to Address)	Min	0		ns
	t_{ASO}	Address Setup Time to CE#f Low During Toggle Bit Polling	Min	15		ns
t_{ELAX}	t_{AH}	Address Hold Time	Min	45		ns
	t_{AHT}	Address Hold time from CE#f or OE# High During Toggle Bit Polling	Min	0		ns
t_{DVEH}	t_{DS}	Data Setup Time	Min	35		ns
t_{EHDX}	t_{DH}	Data Hold Time	Min	0		ns
t_{GHEL}	t_{GHEL}	Read Recovery Time Before Write (OE# High to WE# Low)	Min	0		ns
t_{WLEL}	t_{WS}	WE# Setup Time	Min	0		ns
t_{EHWH}	t_{WH}	WE# Hold Time	Min	0		ns
t_{ELEH}	t_{CP}	CE#f Pulse Width	Min	30	35	ns
t_{EHEL}	t_{CPH}	CE#f Pulse Width High	Min	30	35	ns
t_{WHWH1}	t_{WHWH1}	Programming Operation (Note 2)	Typ	7		µs
t_{WHWH1}	t_{WHWH1}	Accelerated Programming Operation (Note 2)	Typ	4		µs
t_{WHWH2}	t_{WHWH2}	Sector Erase Operation (Note 2)	Typ	0.7		sec

Notes:

1. *Not 100% tested.*
2. *See the "Flash Erase And Programming Performance" section for more information.*

AC CHARACTERISTICS

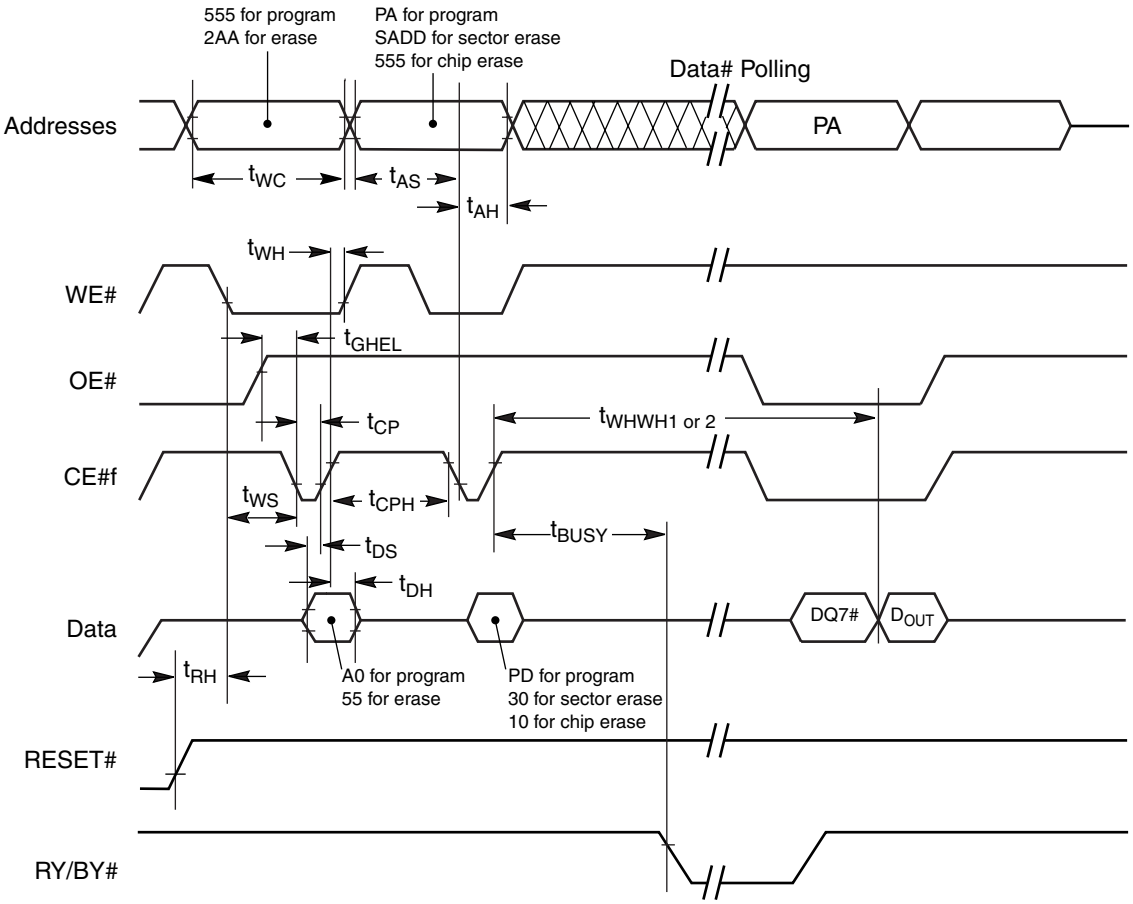

Notes:

1. *Figure indicates last two bus cycles of a program or erase operation.*
2. *PA = program address, SA = sector address, PD = program data.*
3. *DQ7# is the complement of the data written to the device. D_{OUT} is the data written to the device.*
4. *Waveforms are for the word mode.*

Figure 27. Flash Alternate CE#f Controlled Write (Erase/Program) Operation Timings

AC CHARACTERISTICS

SRAM Read Cycle

Parameter Symbol	Description		Speed Options		Unit
			70	85	
t_{RC}	Read Cycle Time	Min	70	85	ns
t_{AA}	Address Access Time	Max	70	85	ns
t_{CO1}, t_{CO2}	Chip Enable to Output	Max	70	85	ns
t_{OE}	Output Enable Access Time	Max	35	45	ns
t_{BA}	LB#s, UB#s to Valid Output	Max	70	85	ns
t_{LZ1}, t_{LZ2}	Chip Enable (CE1#s Low and CE2s High) to Low-Z Output	Min	10		ns
t_{BLZ}	UB#, LB# Enable to Low-Z Output	Min	10		ns
t_{OLZ}	Output Enable to Low-Z Output	Min	5		ns
t_{HZ1}, t_{HZ2}	Chip disable to High-Z Output	Min	0		ns
		Max	25		
t_{BHZ}	UB#s, LB#s Disable to High-Z Output	Min	0		ns
		Max	25		
t_{OHZ}	Output Disable to High-Z Output	Min	0		ns
		Max	25		
t_{OH}	Output Data Hold from Address Change	Min	10	15	ns

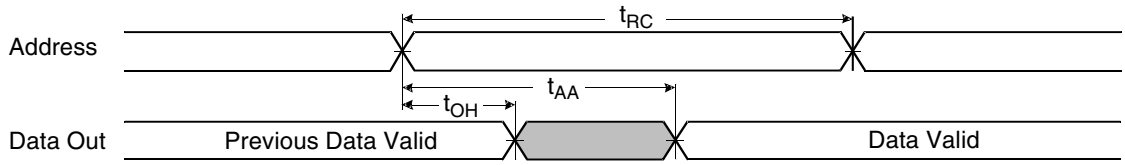

Note: *CE1#s = OE# = V_{IL}, CE2s = WE# = V_{IH}, UB#s and/or LB#s = V_{IL}*

Figure 28. SRAM Read Cycle—Address Controlled

AC CHARACTERISTICS

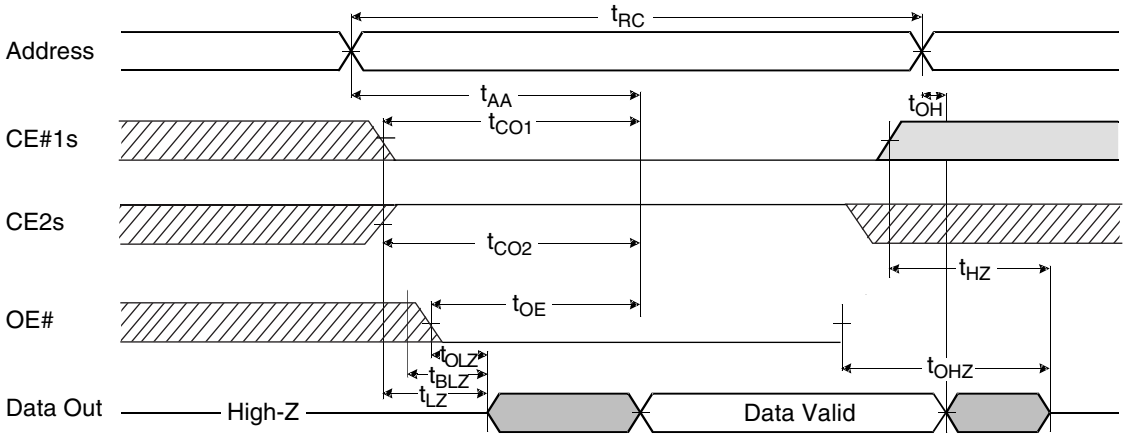

Figure 29. SRAM Read Cycle

Notes:

1. *WE# = V_{IH}, if CIOs is low, ignore UB#s/LB#s timing.*
1. *t_{HZ} and t_{OHZ} are defined as the time at which the outputs achieve the open circuit conditions and are not referenced to output voltage levels.*
2. *At any given temperature and voltage condition, t_{HZ} (Max.) is less than t_{LZ} (Min.) both for a given device and from device to device interconnection.*

AC CHARACTERISTICS

SRAM Write Cycle

Parameter Symbol	Description		Speed Options		Unit
			70	85	
t_{WC}	Write Cycle Time	Min	70	85	ns
t_{Cw}	Chip Enable to End of Write	Min	60	70	ns
t_{AS}	Address Setup Time	Min	0		ns
t_{AW}	Address Valid to End of Write	Min	60	70	ns
t_{BW}	UB#s, LB#s to End of Write	Min	60	70	ns
t_{WP}	Write Pulse Time	Min	50	60	ns
t_{WR}	Write Recovery Time	Min	0		ns
t_{WHZ}	Write to Output High-Z	Min	0		ns
		Max	20	25	
t_{DW}	Data to Write Time Overlap	Min	30	35	ns
t_{DH}	Data Hold from Write Time	Min	0		ns
t_{OW}	End Write to Output Low-Z	Min	5		ns

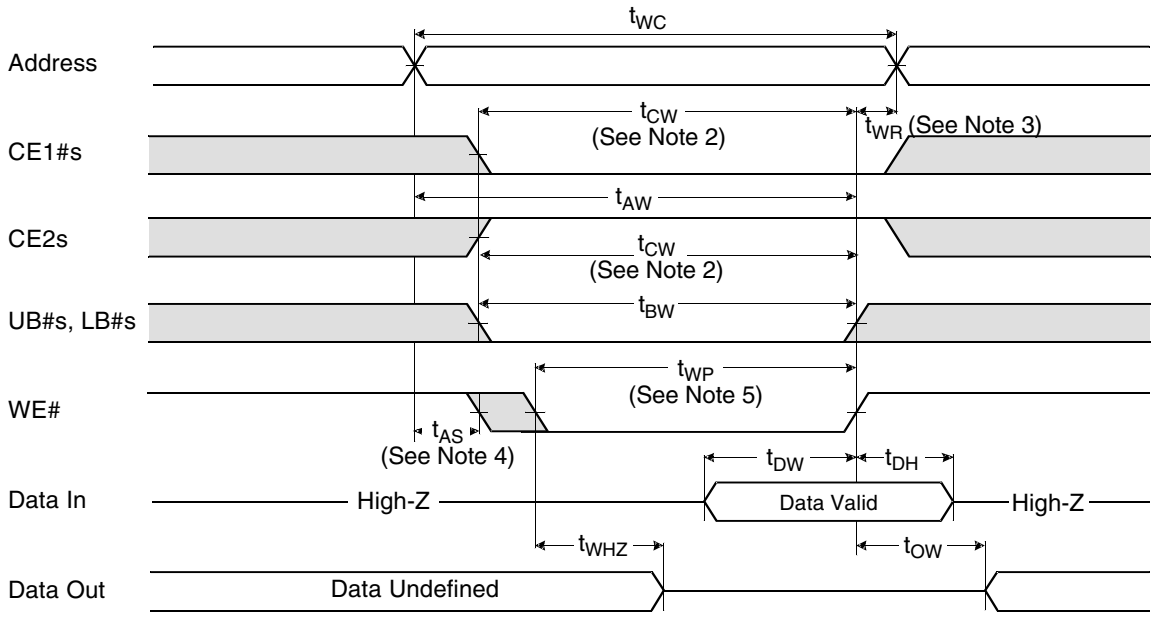

Notes:

1. *WE# controlled, if CIOs is low, ignore UB#s and LB#s timing.*
1. *t_{CW} is measured from CE1#s going low to the end of write.*
2. *t_{WR} is measured from the end of write to the address change. t_{WR} applied in case a write ends as CE1#s or WE# going high.*
3. *t_{AS} is measured from the address valid to the beginning of write.*
4. *A write occurs during the overlap (t_{WP}) of low CE#1 and low WE#. A write begins when CE1#s goes low and WE# goes low when asserting UB#s or LB#s for a single byte operation or simultaneously asserting UB#s and LB#s for a double byte operation. A write ends at the earliest transition when CE1#s goes high and WE# goes high. The t_{WP} is measured from the beginning of write to the end of write.*

Figure 30. SRAM Write Cycle—WE# Control

AC CHARACTERISTICS

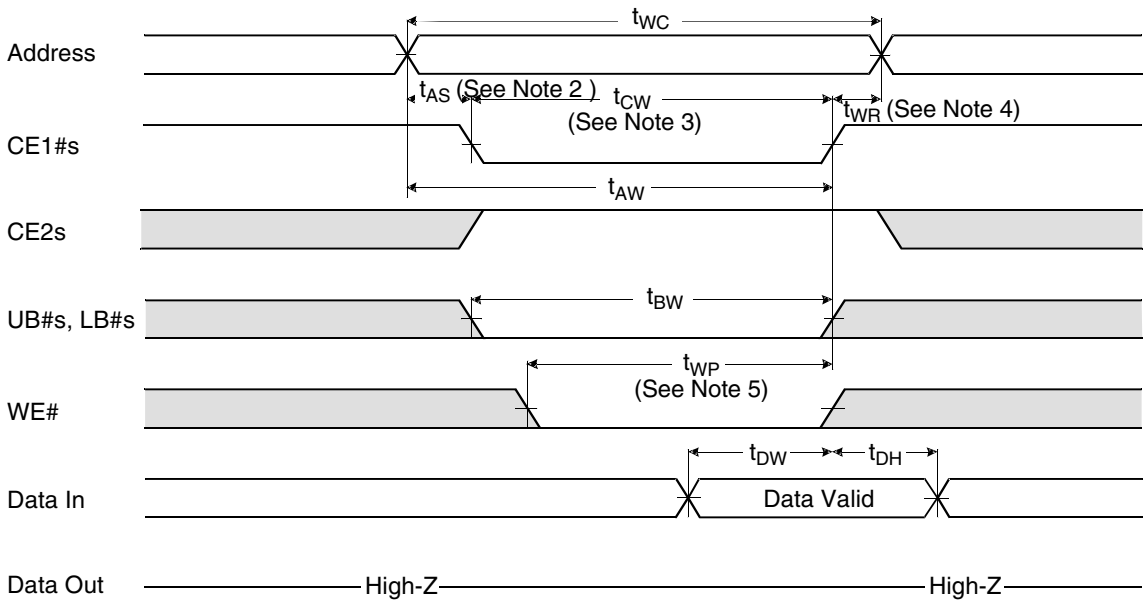

Notes:

1. *CE1#s controlled, if CIOs is low, ignore UB#s and LB#s timing.*
1. *t_{CW} is measured from CE1#s going low to the end of write.*
2. *t_{WR} is measured from the end of write to the address change. t_{WR} applied in case a write ends as CE1#s or WE# going high.*
3. *t_{AS} is measured from the address valid to the beginning of write.*
4. *A write occurs during the overlap (t_{WP}) of low CE#1 and low WE#. A write begins when CE1#s goes low and WE# goes low when asserting UB#s or LB#s for a single byte operation or simultaneously asserting UB#s and LB#s for a double byte operation. A write ends at the earliest transition when CE1#s goes high and WE# goes high. The t_{WP} is measured from the beginning of write to the end of write.*

Figure 31. SRAM Write Cycle—CE1#s Control

AC CHARACTERISTICS

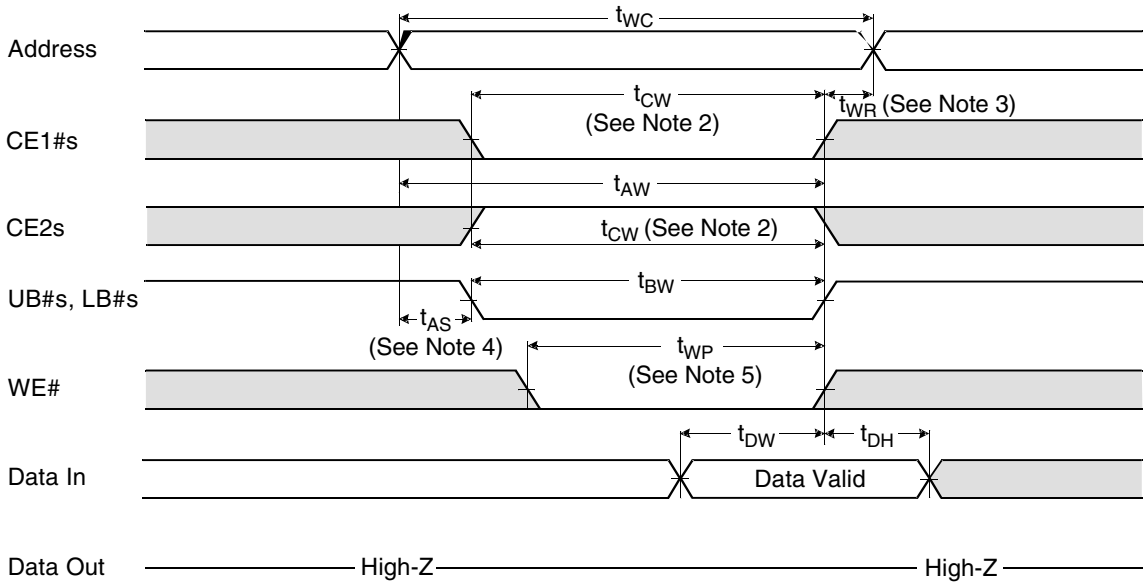

Notes:

1. *UB#s and LB#s controlled, CIOs must be high.*
1. *t_{CW} is measured from CE1#s going low to the end of write.*
2. *t_{WR} is measured from the end of write to the address change. t_{WR} applied in case a write ends as CE1#s or WE# going high.*
3. *t_{AS} is measured from the address valid to the beginning of write.*
4. *A write occurs during the overlap (t_{WP}) of low CE#1 and low WE#. A write begins when CE1#s goes low and WE# goes low when asserting UB#s or LB#s for a single byte operation or simultaneously asserting UB#s and LB#s for a double byte operation. A write ends at the earliest transition when CE1#s goes high and WE# goes high. The t_{WP} is measured from the beginning of write to the end of write.*

Figure 32. SRAM Write Cycle—UB#s and LB#s Control

FLASH ERASE AND PROGRAMMING PERFORMANCE

Parameter		Typ (Note 1)	Max (Note 2)	Unit	Comments
Sector Erase Time		0.7	15	sec	Excludes 00h programming prior to erasure (Note 4)
Chip Erase Time		27		sec	
Byte Program Time		5	150	µs	
Word Program Time		7	210	µs	Excludes system level overhead (Note 5)
Accelerated Byte/Word Program Time		4	120	µs	
	Byte Mode	9	27		
Chip Program Time (Note 3)	Word Mode	6	18	sec	

Notes:

1. *Typical program and erase times assume the following conditions: 25°C, 3.0 V V_{CC}, 1,000,000 cycles. Additionally, programming typicals assume checkerboard pattern.*
2. *Under worst case conditions of 90°C, V_{CC} = 2.7 V, 1,000,000 cycles.*
3. *The typical chip programming time is considerably less than the maximum chip programming time listed, since most byteswords program faster than the maximum program times listed.*
4. *In the pre-programming step of the Embedded Erase algorithm, all bytewords are programmed to 00h before erasure.*
5. *System-level overhead is the time required to execute the two- or four-bus-cycle sequence for the program command. See Table 14 for further information on command definitions.*
6. *The device has a minimum erase and program cycle endurance of 1,000,000 cycles.*

FLASH LATCHUP CHARACTERISTICS

Description	Min	Max
Input voltage with respect to V_{SS} on all pins except I/O pins (including OE# and RESET#)	–1.0 V	12.5 V
Input voltage with respect to V_{SS} on all I/O pins	–1.0 V	V_{CC} + 1.0 V
V_{CC} Current	–100 mA	+100 mA

Note: *Includes all pins except V_{CC}. Test conditions: V_{CC} = 3.0 V, one pin at a time.*

PACKAGE PIN CAPACITANCE

Parameter Symbol	Description	Test Setup	Typ	Max	Unit
C_{IN}	Input Capacitance	V_{IN} = 0	11	14	pF
C_{OUT}	Output Capacitance	V_{OUT} = 0	12	16	pF
C_{IN2}	Control Pin Capacitance	V_{IN} = 0	14	16	pF
C_{IN3}	WP#/ACC Pin Capacitance	V_{IN} = 0	17	20	pF

Note: *7.Test conditions T_A = 25°C, f = 1.0 MHz.*

FLASH DATA RETENTION

Parameter Description	Test Conditions	Min	Unit
Minimum Pattern Data Retention Time	150°C	10	Years
	125°C	20	Years

SRAM DATA RETENTION CHARACTERISTICS

Parameter Symbol	Parameter Description	Test Setup	Min	Typ	Max	Unit
V_{DR}	V_{CC} for Data Retention	CS1#s ≥ V_{CC} – 0.2 V (See Note)	1.5		3.3	V
I_{DH}	Data Retention Current	V_{CC} = 1.5 V, CE1#s ≥ V_{CC} – 0.2 V (See Note)		0.5	2	µA
t_{SDR}	Data Retention Set-Up Time	See data retention waveforms	0			ns
t_{RDR}	Recovery Time		t_{RC}			ns

Note: *CE1#s ≥ V_{CC} – 0.2 V, CE2s ≥ V_{CC} – 0.2 V (CE1#s controlled) or CE2s ≤ 0.2 V (CE2s controlled), CIOs = V_{SS} or V_{CC}.*

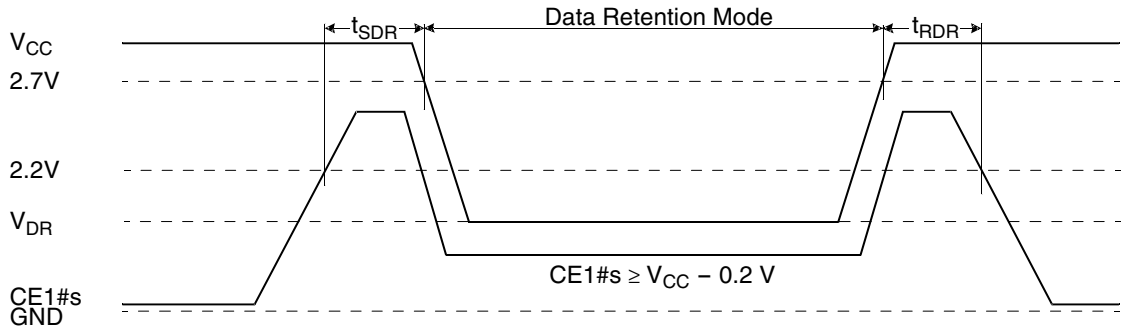

Figure 33. CE1#s Controlled Data Retention Mode

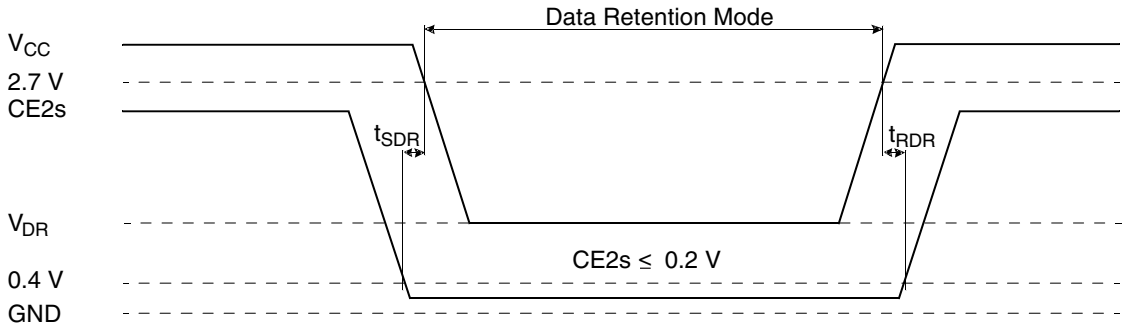

Figure 34. CE2s Controlled Data Retention Mode

PHYSICAL DIMENSIONS

FLA069—69-Ball Fine-Pitch Grid Array 8 x 11 mm

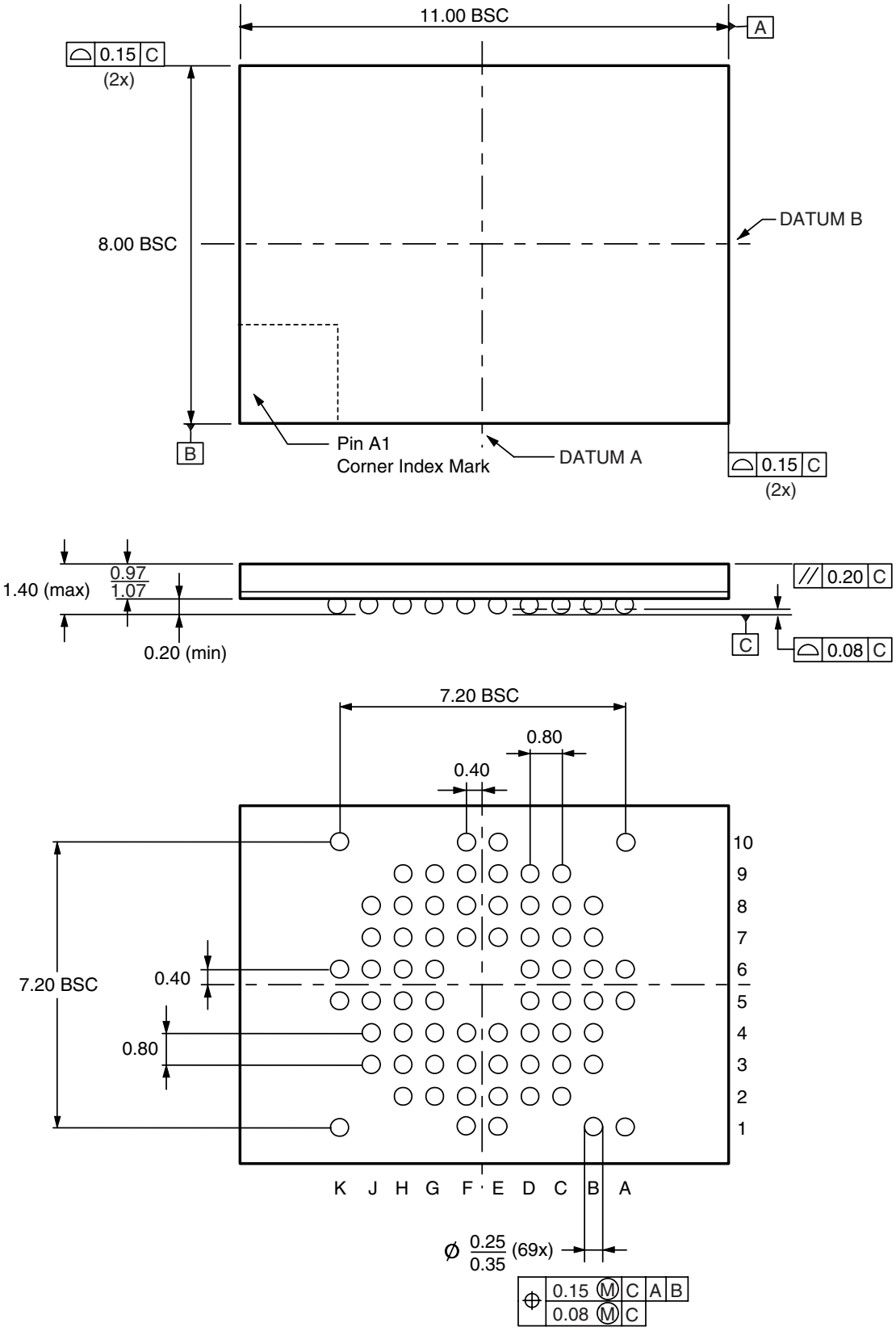

REVISION SUMMARY

Revision A (October 24, 2001)

Initial release.

Revision A+1 (March 4, 2002)

Ordering Information

Changed package marking for Am42DL1642D (4 part numbers).

Figure 30, SRAM Write Cycle—WE# Control

In Data Out waveform, corrected t_{BW} to t_{WHZ}.

Revision A+2 (February 6, 2004)

Command Definitions

The result of writing incorrect address and data values changed to reflect that doing so places the device in an unknown state.

Unlock Bypass Command Sequence

Deleted statements regarding what the first and second cycles must contain to exit the unlock bypass mode.

Table 14. Command Definitions

The first address designator in the Unlock Bypass Reset command sequence changed from BA to XXX.

Trademarks

Copyright © 2002 Advanced Micro Devices, Inc. All rights reserved.

AMD, the AMD logo, and combinations thereof are registered trademarks of Advanced Micro Devices, Inc.

ExpressFlash is a trademark of Advanced Micro Devices, Inc.

Product names used in this publication are for identification purposes only and may be trademarks of their respective companies.

Product Selector Guide 5
MCP Block Diagram 5
Flash Memory Block Diagram 6
Connection Diagram 7
Special Handling Instructions for FBGA Package 7
Pin Description 8
Logic Symbol 8
Ordering Information 9
Device Bus Operations 10
Table 1. Device Bus Operations—Flash Word Mode (CIOf = V_{IH}), SRAM Word Mode (CIOs = V_{CC}) 11
Table 2. Device Bus Operations—Flash Byte Mode (CIOf = V_{SS}), SRAM Word Mode (CIOs = V_{CC}) 12
Word/Byte Configuration 13
Requirements for Reading Array Data 13
Writing Commands/Command Sequences 13
Accelerated Program Operation 13
Autoselect Functions 13
Simultaneous Read/Write Operations with Zero Latency 13
Standby Mode 14
Automatic Sleep Mode 14
RESET#: Hardware Reset Pin 14
Output Disable Mode 14
Table 3. Device Bank Division 14
Table 4. Sector Addresses for Top Boot Sector Devices 15
Table 5. SecSi Sector Addresses for Top Boot Devices 15
Table 6. Sector Addresses for Bottom Boot Sector Devices 16
Table 7. SecSi™ Addresses for Bottom Boot Devices 16
Autoselect Mode 17
Sector/Sector Block Protection and Unprotection 17
Table 8. Top Boot Sector/Sector Block Addresses for Protection/Unprotection 17
Table 9. Bottom Boot Sector/Sector Block Addresses for Protection/Unprotection 17
Write Protect (WP#) 18
Temporary Sector/Sector Block Unprotect 18
Figure 1. Temporary Sector Unprotect Operation 18
Figure 2. In-System Sector/Sector Block Protect and Unprotect Algorithms 19
SecSi (Secured Silicon) Sector Flash Memory Region 20
Factory Locked: SecSi Sector Programmed and Protected At the Factory 20
Customer Lockable: SecSi Sector NOT Programmed or Protected At the Factory 20
Hardware Data Protection 20
Low V_{CC} Write Inhibit 20
Write Pulse “Glitch” Protection 21
Logical Inhibit 21
Power-Up Write Inhibit 21
Common Flash Memory Interface (CFI) 21
Table 10. CFI Query Identification String 21
System Interface String 22
Table 12. Device Geometry Definition 22
Table 13. Primary Vendor-Specific Extended Query 23
Command Definitions 24
Reading Array Data 24
Reset Command 24
Autoselect Command Sequence 24
Enter SecSi Sector/Exit SecSi Sector Command Sequence 25
Byte/Word Program Command Sequence 25
Unlock Bypass Command Sequence 25
Figure 3. Program Operation 26
Chip Erase Command Sequence 26
Sector Erase Command Sequence 26
Erase Suspend/Erase Resume Commands 27
Figure 4. Erase Operation 27
Table 14. Command Definitions 28
Table 15. Autoselect Device ID Codes 28
Write Operation Status 29
DQ7: Data# Polling 29
Figure 5. Data# Polling Algorithm 29
RY/BY#: Ready/Busy# 30
DQ6: Toggle Bit I 30
Figure 6. Toggle Bit Algorithm 30
DQ2: Toggle Bit II 31
Reading Toggle Bits DQ6/DQ2 31
DQ5: Exceeded Timing Limits 31
DQ3: Sector Erase Timer 31
Table 16. Write Operation Status 32
Absolute Maximum Ratings 33
Operating Ranges 33
Industrial (I) Devices 33
V_{CC}f/V_{CC}s Supply Voltage 33
DC Characteristics 34
CMOS Compatible 34
SRAM DC and Operating Characteristics 35
Zero-Power Flash 36
Figure 9. I_{CC1} Current vs. Time (Showing Active and Automatic Sleep Currents) 36
Figure 10. Typical I_{CC1} vs. Frequency 36
Test Conditions 37
Figure 11. Test Setup 37
Table 17. Test Specifications 37
Key To Switching Waveforms 37
Figure 12. Input Waveforms and Measurement Levels 37
AC Characteristics 38
SRAM CE#s Timing 38
Figure 13. Timing Diagram for Alternating Between SRAM to Flash 38
Flash Read-Only Operations 39
Figure 14. Read Operation Timings 39
Hardware Reset (RESET#) 40
Figure 15. Reset Timings 40
Flash Word/Byte Configuration (CIOf) 41
Figure 16. CIOf Timings for Read Operations 41
Figure 17. CIOf Timings for Write Operations 41
Flash Erase and Program Operations 42
Figure 18. Program Operation Timings 43
Figure 19. Accelerated Program Timing Diagram 43
Figure 20. Chip/Sector Erase Operation Timings 44
Figure 21. Back-to-back Read/Write Cycle Timings 45
Figure 22. Data# Polling Timings (During Embedded Algorithms). 45
Figure 23. Toggle Bit Timings (During Embedded Algorithms) 46
Figure 24. DQ2 vs. DQ6 46
Temporary Sector/Sector Block Unprotect 47
Figure 25. Temporary Sector/Sector Block Unprotect Timing Diagram 47
Figure 26. Sector/Sector Block Protect and Unprotect Timing Diagram 48

Alternate CE#f Controlled Erase and Program Operations 49
Figure 27. Flash Alternate CE#f Controlled Write (Erase/Program) Operation Timings 50
SRAM Read Cycle 51
Figure 28. SRAM Read Cycle—Address Controlled 51
Figure 29. SRAM Read Cycle 52
SRAM Write Cycle 53
Figure 30. SRAM Write Cycle—WE# Control 53
Figure 31. SRAM Write Cycle—CE1#s Control 54
Figure 32. SRAM Write Cycle—UB#s and LB#s Control 55
Flash Erase And Programming Performance . . 56
Flash Latchup Characteristics. 56
Package Pin Capacitance 56
FLASH Data Retention 56
SRAM Data Retention Characteristics 57
Figure 33. CE1#s Controlled Data Retention Mode 57
Figure 34. CE2s Controlled Data Retention Mode 57
Physical Dimensions 58
FLA069—69-Ball Fine-Pitch Grid Array 8 x 11 mm 58
Revision Summary 59
Revision A (October 24, 2001) 59

Am42DL16x2D

Stacked Multi-Chip Package (MCP) Flash Memory and SRAM

Am29DL16xD 16 Megabit (2 M x 8-Bit/1 M x 16-Bit) CMOS 3.0 Volt-only, Simultaneous Operation Flash Memory and 2 Mbit (128 K x 16-Bit) Static RAM

DISTINCTIVE CHARACTERISTICS

MCP Features

- **Power supply voltage of 2.7 to 3.3 volt**
- **High performance**
  - Access time as fast as 70 ns
- **Package**
  - 69-Ball FBGA
- **Operating Temperature**
  - –40°C to +85°C

Flash Memory Features

ARCHITECTURAL ADVANTAGES

- **Simultaneous Read/Write operations**
  - Data can be continuously read from one bank while executing erase/program functions in other bank
  - Zero latency between read and write operations
- **Secured Silicon (SecSi) Sector: Extra 64 KByte sector**
  - *Factory locked and identifiable:* 16 bytes available for secure, random factory Electronic Serial Number; verifiable as factory locked through autoselect function.
  - *Customer lockable:* Can be read, programmed, or erased just like other sectors. Once locked, data cannot be changed
- **Zero Power Operation**
  - Sophisticated power management circuits reduce power consumed during inactive periods to nearly zero
- **Top or bottom boot block**
- **Manufactured on 0.23 µm process technology**
- **Compatible with JEDEC standards**
  - Pinout and software compatible with single-power-supply flash standard

PERFORMANCE CHARACTERISTICS

- **High performance**
  - 70 ns access time
  - Program time: 4 µs/word typical utilizing Accelerate function
- **Ultra low power consumption (typical values)**
  - 2 mA active read current at 1 MHz
  - 10 mA active read current at 5 MHz
  - 200 nA in standby or automatic sleep mode
- **Minimum 1 million write cycles guaranteed per sector**
- **20 Year data retention at 125°C**
  - Reliable operation for the life of the system

SOFTWARE FEATURES

- **Data Management Software (DMS)**
  - AMD-supplied software manages data programming and erasing, enabling EEPROM emulation
  - Eases sector erase limitations
- **Supports Common Flash Memory Interface (CFI)**
- **Erase Suspend/Erase Resume**
  - Suspends erase operations to allow programming in same bank
- **Data# Polling and Toggle Bits**
  - Provides a software method of detecting the status of program or erase cycles
- **Unlock Bypass Program command**
  - Reduces overall programming time when issuing multiple program command sequences

HARDWARE FEATURES

- **Any combination of sectors can be erased**
- **Ready/Busy# output (RY/BY#)**
  - Hardware method for detecting program or erase cycle completion
- **Hardware reset pin (RESET#)**
  - Hardware method of resetting the internal state machine to reading array data
- **WP#/ACC input pin**
  - Write protect (WP#) function allows protection of two outermost boot sectors, regardless of sector protect status
  - Acceleration (ACC) function accelerates program timing
- **Sector protection**
  - Hardware method of locking a sector, either in-system or using programming equipment, to prevent any program or erase operation within that sector
  - Temporary Sector Unprotect allows changing data in protected sectors in-system

SRAM Features

- **Power dissipation**
  - Operating: 20 mA maximum
  - Standby: 10 µA maximum
- **CE1#s and CE2s Chip Select**
- **Power down features using CE1#s and CE2s**
- **Data retention supply voltage: 1.5 to 3.3 volt**
- **Byte data control: LB#s (DQ0–DQ7), UB#s (DQ8–DQ15)**

This document contains information on a product under development at Advanced Micro Devices. The information is intended to help you evaluate this product. AMD reserves the right to change or discontinue work on this proposed product without notice.

Publication# **25561** Rev: **A** Amendment/**+2**
Issue Date: **February 6, 2004**

GENERAL DESCRIPTION

Am29DL16xD Features

The Am29DL16xD family is a 16 megabit, 3.0 volt-only flash memory device, organized as 1,048,576 words of 16 bits or 2,097,152 bytes of 8 bits each. Word mode data appears on DQ15–DQ0; byte mode data appears on DQ7–DQ0. The device is designed to be programmed in-system with the standard 3.0 volt V_{CC} supply, and can also be programmed in standard EPROM programmers.

The device is available with access times of 70 ns or 85 ns. The device is offered in a 69-ball FBGA package. Standard control pins—chip enable (CE#f), write enable (WE#), and output enable (OE#)—control normal read and write operations, and avoid bus contention issues.

The device requires only a **single 3.0 volt power supply** for both read and write functions. Internally generated and regulated voltages are provided for the program and erase operations.

Simultaneous Read/Write Operations with Zero Latency

The Simultaneous Read/Write architecture provides **simultaneous operation** by dividing the memory space into two banks. The device can improve overall system performance by allowing a host system to program or erase in one bank, then immediately and simultaneously read from the other bank, with zero latency. This releases the system from waiting for the completion of program or erase operations.

The Am29DL16xD devices uses multiple bank architectures to provide flexibility for different applications. Four devices are available with the following bank sizes:

Device	Bank 1	Bank 2
DL161	0.5 Mb	15.5 Mb
DL162	2 Mb	14 Mb
DL163	4 Mb	12 Mb
DL164	8 Mb	8 Mb

The **Secured Silicon (SecSi) Sector** is an extra 64 Kbit sector capable of being permanently locked by AMD or customers. The **SecSi Sector Indicator Bit** (DQ7) is permanently set to a 1 if the part is **factory locked**, and set to a 0 if **customer lockable**. This way, customer lockable parts can never be used to replace a factory locked part.

Factory locked parts provide several options. The SecSi Sector may store a secure, random 16 byte ESN (Electronic Serial Number). Customer Lockable parts may utilize the SecSi Sector as bonus space, reading and writing like any other flash sector, or may permanently lock their own code there.

DMS (Data Management Software) allows systems to easily take advantage of the advanced architecture of the simultaneous read/write product line by allowing removal of EEPROM devices. DMS will also allow the system software to be simplified, as it will perform all functions necessary to modify data in file structures, as opposed to single-byte modifications. To write or update a particular piece of data (a phone number or configuration data, for example), the user only needs to state which piece of data is to be updated, and where the updated data is located in the system. This is an advantage compared to systems where user-written software must keep track of the old data location, status, logical to physical translation of the data onto the Flash memory device (or memory devices), and more. Using DMS, user-written software does not need to interface with the Flash memory directly. Instead, the user's software accesses the Flash memory by calling one of only six functions. AMD provides this software to simplify system design and software integration efforts.

The device offers complete compatibility with the **JEDEC single-power-supply Flash command set standard**. Commands are written to the command register using standard microprocessor write timings. Reading data out of the device is similar to reading from other Flash or EPROM devices.

The host system can detect whether a program or erase operation is complete by using the device **status bits:** RY/BY# pin, DQ7 (Data# Polling) and DQ6/DQ2 (toggle bits). After a program or erase cycle has been completed, the device automatically returns to reading array data.

The **sector erase architecture** allows memory sectors to be erased and reprogrammed without affecting the data contents of other sectors. The device is fully erased when shipped from the factory.

Hardware data protection measures include a low V_{CC} detector that automatically inhibits write operations during power transitions. The **hardware sector protection** feature disables both program and erase operations in any combination of the sectors of memory. This can be achieved in-system or via programming equipment.

The device offers two power-saving features. When addresses have been stable for a specified amount of time, the device enters the **automatic sleep mode**. The system can also place the device into the **standby mode**. Power consumption is greatly reduced in both modes.

TABLE OF CONTENTS

Product Selector Guide 5
MCP Block Diagram 5
Flash Memory Block Diagram 6
Connection Diagram 7
Special Handling Instructions for FBGA Package 7
Pin Description 8
Logic Symbol 8
Ordering Information 9
Device Bus Operations 10
Table 1. Device Bus Operations—Flash Word Mode (CIOf = V_{IH}), SRAM Word Mode (CIOs = V_{CC}) 11
Table 2. Device Bus Operations—Flash Byte Mode (CIOf = V_{SS}), SRAM Word Mode (CIOs = V_{CC}) 12
Word/Byte Configuration 13
Requirements for Reading Array Data 13
Writing Commands/Command Sequences 13
Accelerated Program Operation 13
Autoselect Functions 13
Simultaneous Read/Write Operations with Zero Latency 13
Standby Mode 14
Automatic Sleep Mode 14
RESET#: Hardware Reset Pin 14
Output Disable Mode 14
Table 3. Device Bank Division 14
Table 4. Sector Addresses for Top Boot Sector Devices 15
Table 5. SecSi Sector Addresses for Top Boot Devices 15
Table 6. Sector Addresses for Bottom Boot Sector Devices 16
Table 7. SecSi™ Addresses for Bottom Boot Devices 16
Autoselect Mode 17
Sector/Sector Block Protection and Unprotection 17
Table 8. Top Boot Sector/Sector Block Addresses for Protection/Unprotection 17
Table 9. Bottom Boot Sector/Sector Block Addresses for Protection/Unprotection 17
Write Protect (WP#) 18
Temporary Sector/Sector Block Unprotect 18
Figure 1. Temporary Sector Unprotect Operation 18
Figure 2. In-System Sector/Sector Block Protect and Unprotect Algorithms 19
SecSi (Secured Silicon) Sector Flash Memory Region 20
Factory Locked: SecSi Sector Programmed and Protected At the Factory 20
Customer Lockable: SecSi Sector NOT Programmed or Protected At the Factory 20
Hardware Data Protection 20
Low V_{CC} Write Inhibit 20
Write Pulse “Glitch” Protection 21
Logical Inhibit 21
Power-Up Write Inhibit 21
Common Flash Memory Interface (CFI) 21
Table 10. CFI Query Identification String 21
System Interface String 22
Table 12. Device Geometry Definition 22
Table 13. Primary Vendor-Specific Extended Query 23
Command Definitions 24
Reading Array Data 24
Reset Command 24
Autoselect Command Sequence 24
Enter SecSi Sector/Exit SecSi Sector Command Sequence 25
Byte/Word Program Command Sequence 25
Unlock Bypass Command Sequence 25
Figure 3. Program Operation 26
Chip Erase Command Sequence 26
Sector Erase Command Sequence 26
Erase Suspend/Erase Resume Commands 27
Figure 4. Erase Operation 27
Table 14. Command Definitions 28
Table 15. Autoselect Device ID Codes 28
Write Operation Status 29
DQ7: Data# Polling 29
Figure 5. Data# Polling Algorithm 29
RY/BY#: Ready/Busy# 30
DQ6: Toggle Bit I 30
Figure 6. Toggle Bit Algorithm 30
DQ2: Toggle Bit II 31
Reading Toggle Bits DQ6/DQ2 31
DQ5: Exceeded Timing Limits 31
DQ3: Sector Erase Timer 31
Table 16. Write Operation Status 32
Absolute Maximum Ratings 33
Operating Ranges 33
Industrial (I) Devices 33
V_{CC}f/V_{CC}s Supply Voltage 33
DC Characteristics 34
CMOS Compatible 34
SRAM DC and Operating Characteristics 35
Zero-Power Flash 36
Figure 9. I_{CC1} Current vs. Time (Showing Active and Automatic Sleep Currents) 36
Figure 10. Typical I_{CC1} vs. Frequency 36
Test Conditions 37
Figure 11. Test Setup 37
Table 17. Test Specifications 37
Key To Switching Waveforms 37
Figure 12. Input Waveforms and Measurement Levels 37
AC Characteristics 38
SRAM CE#s Timing 38
Figure 13. Timing Diagram for Alternating Between SRAM to Flash 38
Flash Read-Only Operations 39
Figure 14. Read Operation Timings 39
Hardware Reset (RESET#) 40
Figure 15. Reset Timings 40
Flash Word/Byte Configuration (CIOf) 41
Figure 16. CIOf Timings for Read Operations 41
Figure 17. CIOf Timings for Write Operations 41
Flash Erase and Program Operations 42
Figure 18. Program Operation Timings 43
Figure 19. Accelerated Program Timing Diagram 43
Figure 20. Chip/Sector Erase Operation Timings 44
Figure 21. Back-to-back Read/Write Cycle Timings 45
Figure 22. Data# Polling Timings (During Embedded Algorithms). 45
Figure 23. Toggle Bit Timings (During Embedded Algorithms) 46
Figure 24. DQ2 vs. DQ6 46
Temporary Sector/Sector Block Unprotect 47
Figure 25. Temporary Sector/Sector Block Unprotect Timing Diagram 47

Figure 26. Sector/Sector Block Protect and Unprotect Timing Diagram 48
Alternate CE#f Controlled Erase and Program Operations 49
Figure 27. Flash Alternate CE#f Controlled Write (Erase/Program) Operation Timings 50
SRAM Read Cycle 51
Figure 28. SRAM Read Cycle—Address Controlled 51
Figure 29. SRAM Read Cycle 52
SRAM Write Cycle 53
Figure 30. SRAM Write Cycle—WE# Control 53
Figure 31. SRAM Write Cycle—CE1#s Control 54
Figure 32. SRAM Write Cycle—UB#s and LB#s Control 55
Flash Erase And Programming Performance . 56
Flash Latchup Characteristics. 56
Package Pin Capacitance 56
FLASH Data Retention 56
SRAM Data Retention Characteristics 57
Figure 33. CE1#s Controlled Data Retention Mode 57
Figure 34. CE2s Controlled Data Retention Mode 57
Physical Dimensions 58
FLA069—69-Ball Fine-Pitch Grid Array 8 x 11 mm 58
Revision Summary 59
Revision A (October 24, 2001) 59

PRODUCT SELECTOR GUIDE

Part Number		Am42DL16x2D			
Speed Options	Standard Voltage Range: V_{CC} = 2.7–3.3 V	Flash Memory		SRAM	
		70	**85**	**70**	**85**
Max Access Time (ns)		70	85	70	85
CE# Access (ns)		70	85	70	85
OE# Access (ns)		30	35	35	45

MCP BLOCK DIAGRAM

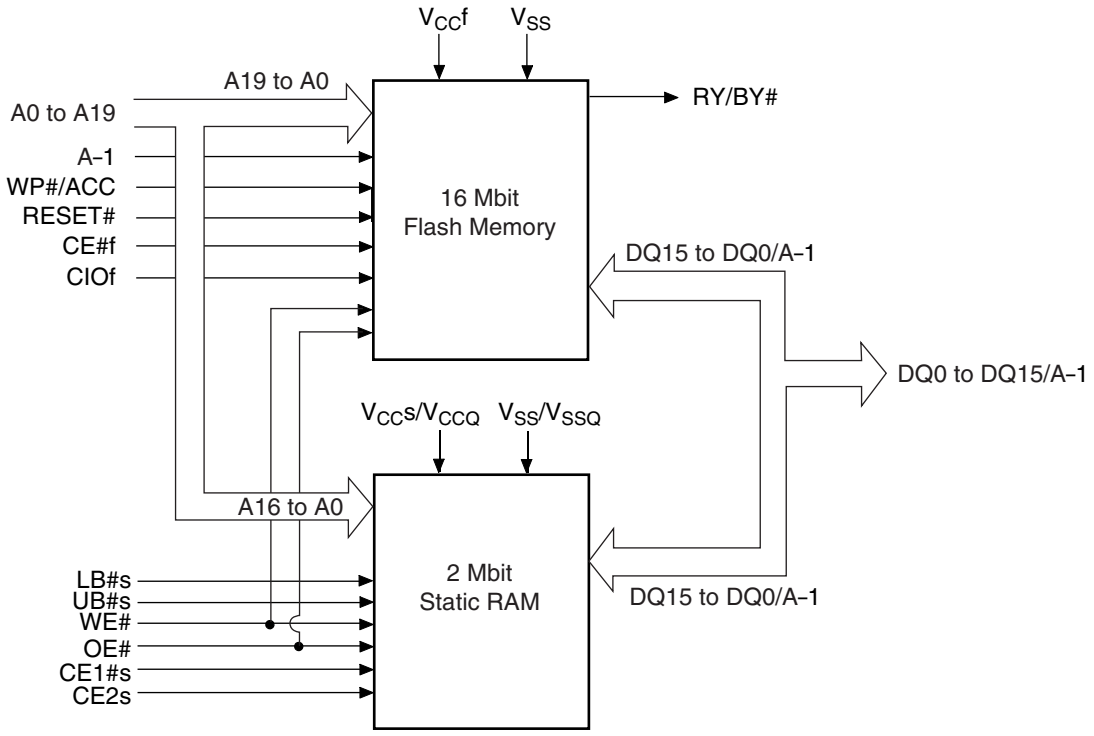

FLASH MEMORY BLOCK DIAGRAM

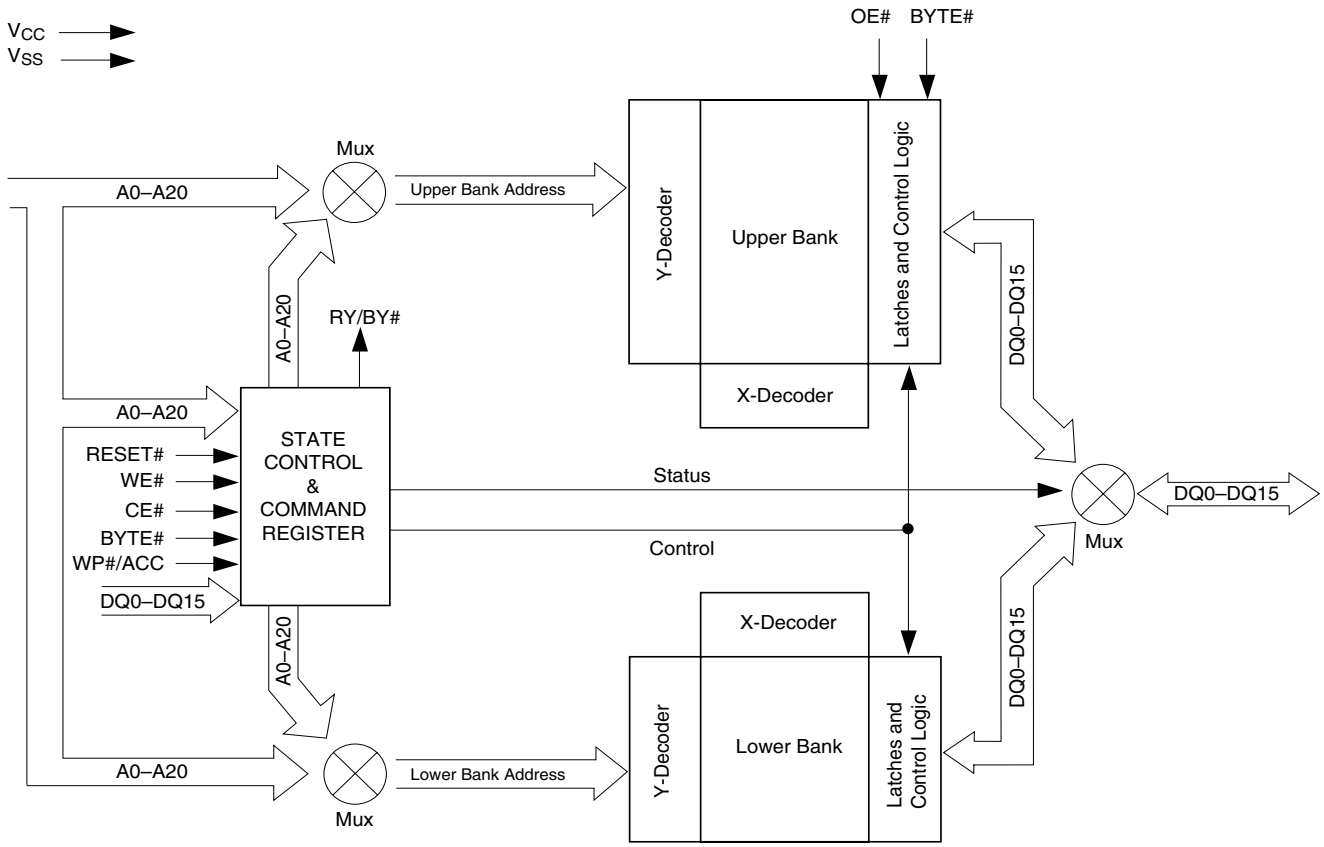

CONNECTION DIAGRAM

69-Ball FBGA
Top View

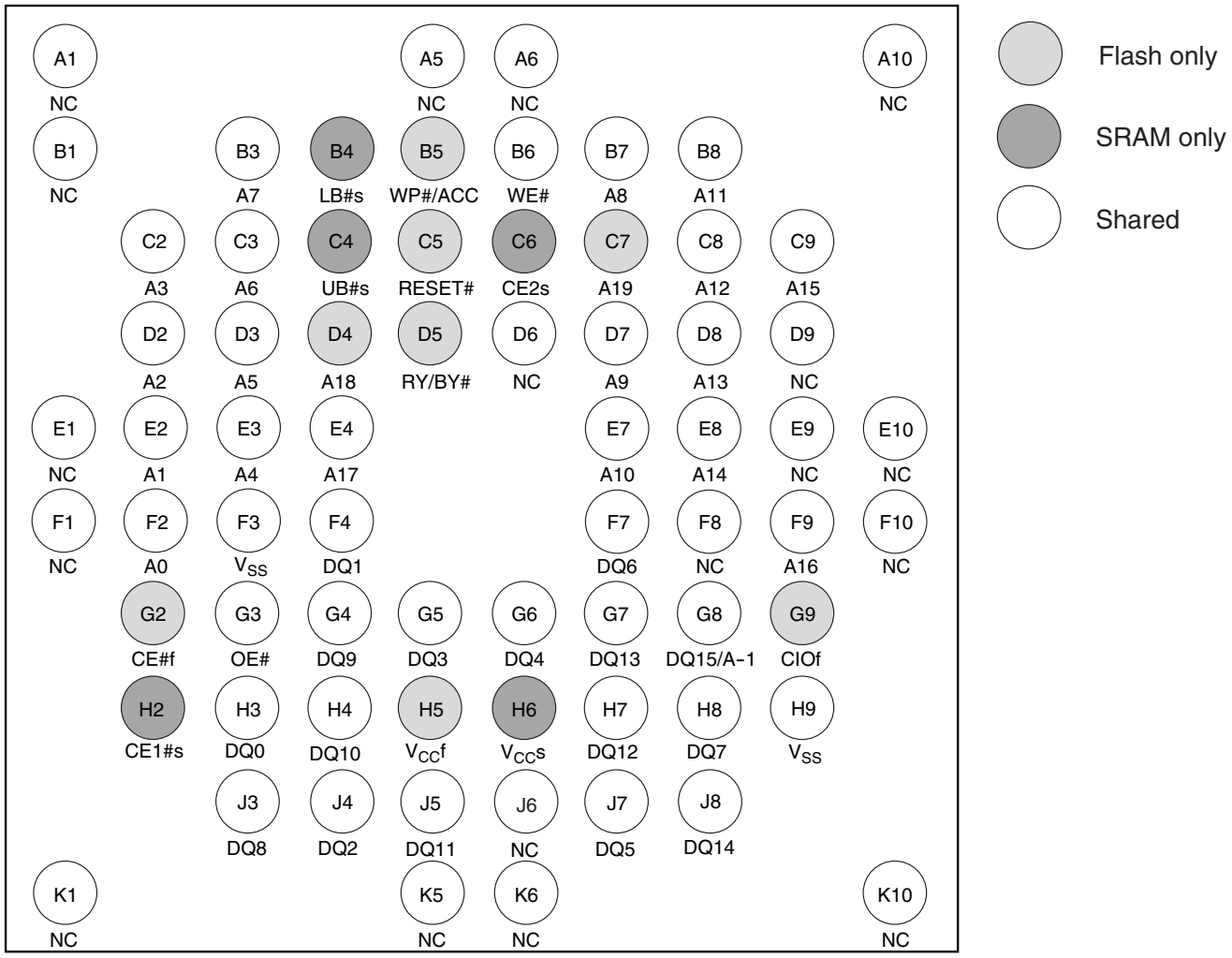

Special Handling Instructions for FBGA Package

Special handling is required for Flash Memory products in FBGA packages.

Flash memory devices in FBGA packages may be damaged if exposed to ultrasonic cleaning methods. The package and/or data integrity may be compromised if the package body is exposed to temperatures above 150°C for prolonged periods of time.

PIN DESCRIPTION

A0–A16	=	17 Address Inputs (Common)
A–1, A19–A17	=	4 Address Inputs (Flash)
DQ15–DQ0	=	16 Data Inputs/Outputs (Common)
CE#f	=	Chip Enable (Flash)
CE#s	=	Chip Enable (SRAM)
OE#	=	Output Enable (Common)
WE#	=	Write Enable (Common)
RY/BY#	=	Ready/Busy Output
UB#s	=	Upper Byte Control (SRAM)
LB#s	=	Lower Byte Control (SRAM)
CIOf	=	I/O Configuration (Flash) CIOf = V_{IH} = Word mode (x16), CIOf = V_{IL} = Byte mode (x8)
RESET#	=	Hardware Reset Pin, Active Low
WP#/ACC	=	Hardware Write Protect/ Acceleration Pin (Flash)
V_{CC}f	=	Flash 3.0 volt-only single power supply (see Product Selector Guide for speed options and voltage supply tolerances)
V_{CC}s	=	SRAM Power Supply
V_{SS}	=	Device Ground (Common)
NC	=	Pin Not Connected Internally

LOGIC SYMBOL

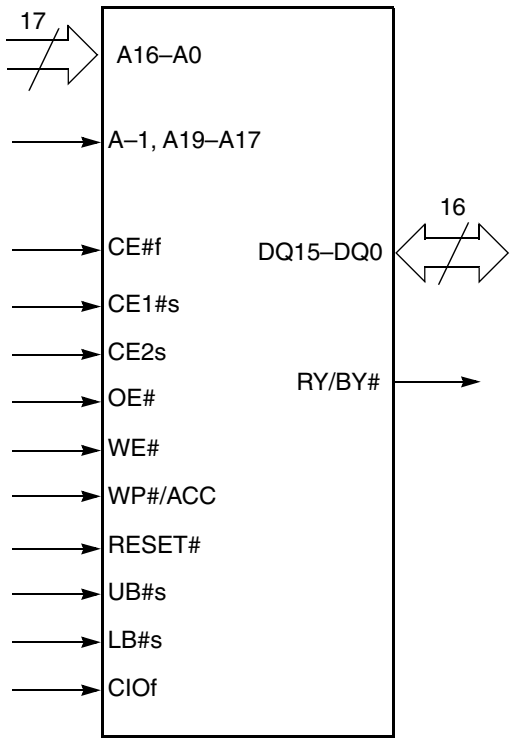

ORDERING INFORMATION

The order number (Valid Combination) is formed by the following:

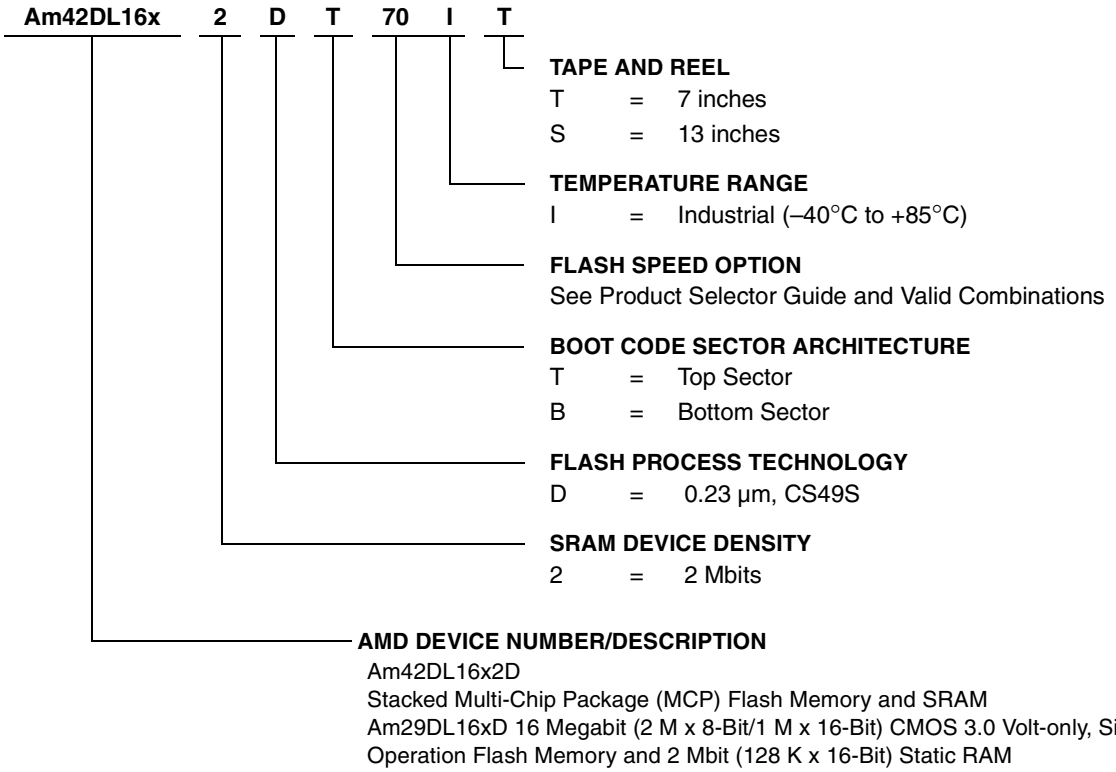

Valid Combinations		
Order Number		**Package Marking**
Am42DL1612DT70I Am42DL1612DB70I	T, S	M42000000I M42000000J
Am42DL1612DT85I Am42DL1612DB85I		M42000000K M42000000L
Am42DL1622DT70I Am42DL1622DB70I		M42000000M M42000000N
Am42DL1622DT85I Am42DL1622DB85I		M42000000O M42000000P
Am42DL1632DT70I Am42DL1632DB70I		M42000000Q M42000000R
Am42DL1632DT85I Am42DL1632DB85I		M42000000S M42000000T
Am42DL1642DT70I Am42DL1642DB70I		M420000004 M420000005
Am42DL1642DT85I Am42DL1642DB85I		M420000006 M420000007

Valid Combinations

Valid Combinations list configurations planned to be supported in volume for this device. Consult the local AMD sales office to confirm availability of specific valid combinations and to check on newly released combinations.

DEVICE BUS OPERATIONS

This section describes the requirements and use of the device bus operations, which are initiated through the internal command register. The command register itself does not occupy any addressable memory location. The register is a latch used to store the commands, along with the address and data information needed to execute the command. The contents of the register serve as inputs to the internal state machine. The state machine outputs dictate the function of the device. Table 1 lists the device bus operations, the inputs and control levels they require, and the resulting output. The following subsections describe each of these operations in further detail.

Table 1. Device Bus Operations—Flash Word Mode (CIOf = V_{IH}), SRAM Word Mode (CIOs = V_{CC})

Operation (Notes 1, 2)	CE#f	CE1#s	CE2s	OE#	WE#	Addr.	LB#s	UB#s	RESET#	WP#/ACC (Note 4)	DQ7–DQ0	DQ15–DQ0
Read from Flash	L	H	X	L	H	A_{IN}	X	X	H	L/H	D_{OUT}	D_{OUT}
		X	L									
Write to Flash	L	H	X	H	L	A_{IN}	X	X	H	(Note 4)	D_{IN}	D_{IN}
		X	L									
Standby	$V_{CC} \pm 0.3$ V	H	X	X	X	X	X	X	$V_{CC} \pm 0.3$ V	H	High-Z	High-Z
		X	L									
Output Disable	L	L	H	H	H	X	L	X	H	L/H	High-Z	High-Z
							X	L				
Flash Hardware Reset	X	H	X	X	X	X	X	X	L	L/H	High-Z	High-Z
		X	L									
		H	X									
Sector Protect (Note 5)	L	X	L	H	L	SA, A6 = L, A1 = H, A0 = L	X	X	V_{ID}	L/H	D_{IN}	X
		H	X									
Sector Unprotect (Note 5)	L	X	L	H	L	SA, A6 = H, A1 = H, A0 = L	X	X	V_{ID}	(Note 6)	D_{IN}	X
Temporary Sector Unprotect	X	H	X	X	X	A_{IN}	X	X	V_{ID}	(Note 6)	D_{IN}	High-Z
		X	L									
Read from SRAM	H	L	H	L	H	A_{IN}	L	L	H	X	D_{OUT}	D_{OUT}
							H	L			High-Z	D_{OUT}
							L	H			D_{OUT}	High-Z
Write to SRAM	H	L	H	X	L	A_{IN}	L	L	H	X	D_{IN}	D_{IN}
							H	L			High-Z	D_{IN}
							L	H			D_{IN}	High-Z

Legend: *L = Logic Low = V_{IL}, H = Logic High = V_{IH}, V_{ID} = 8.5–12.5 V, V_{HH} = 9.0 ± 0.5 V, X = Don't Care, SA = Sector Address, A_{IN} = Address In, D_{IN} = Data In, D_{OUT} = Data Out*

Notes:

1. *Other operations except for those indicated in this column are inhibited.*
2. *Do not apply CE#f = V_{IL}, CE1#s = V_{IL} and CE2s = V_{IH} at the same time.*
3. *Don't care or open LB#s or UB#s.*
4. *If WP#/ACC = V_{IL} , the boot sectors will be protected. If WP#/ACC = V_{IH} the boot sectors protection will be removed. If WP#/ACC = V_{ACC} (9V), the program time will be reduced by 40%.*
5. *The sector protect and sector unprotect functions may also be implemented via programming equipment. See the "Sector/Sector Block Protection and Unprotection" section.*
6. *If WP#/ACC = V_{IL}, the two outermost boot sectors remain protected. If WP#/ACC = V_{IH}, the two outermost boot sector protection depends on whether they were last protected or unprotected using the method described in "Sector/Sector Block Protection and Unprotection". If WP#/ACC = $V_{HH,}$ all sectors will be unprotected.*

Table 2. Device Bus Operations—Flash Byte Mode (CIOf = V_{SS}), SRAM Word Mode (CIOs = V_{CC})

Operation (Notes 1, 2)	CE#f	CE1#s	CE2s	OE#	WE#	Addr.	LB#s (Note 3)	UB#s (Note 3)	RESET#	WP#/ACC (Note 4)	DQ7–DQ0	DQ15–DQ0
Read from Flash	L	H	X	L	H	A_{IN}	X	X	H	L/H	D_{OUT}	High-Z
		X	L									
Write to Flash	L	H	X	H	L	A_{IN}	X	X	H	(Note 3)	D_{IN}	High-Z
		X	L									
Standby	$V_{CC} \pm 0.3$ V	H	X	X	X	X	X	X	$V_{CC} \pm 0.3$ V	H	High-Z	High-Z
		X	L									
Output Disable	L	L	H	H	H	X	L	X	H	L/H	High-Z	High-Z
				H	X	X	X	L				
Flash Hardware Reset	X	H	X	X	X	X	X	X	L	L/H	High-Z	High-Z
		X	L									
Sector Protect (Note 5)	L	H	X	H	L	SA, A6 = L, A1 = H, A0 = L	X	X	V_{ID}	L/H	D_{IN}	X
		X	L									
Sector Unprotect (Note 5)	L	H	X	H	L	SA, A6 = H, A1 = H, A0 = L	X	X	V_{ID}	(Note 6)	D_{IN}	X
		X	L									
Temporary Sector Unprotect	X	H	X	X	X	A_{IN}	X	X	V_{ID}	(Note 6)	D_{IN}	High-Z
		X	L									
Read from SRAM	H	L	H	L	H	A_{IN}	L	L	H	X	D_{OUT}	D_{OUT}
							H	L			High-Z	D_{OUT}
							L	H			D_{OUT}	High-Z
Write to SRAM	H	L	H	X	L	A_{IN}	L	L	H	X	D_{IN}	D_{IN}
							H	L			High-Z	D_{IN}
							L	H			D_{IN}	High-Z

Legend: *L = Logic Low = V_{IL}, H = Logic High = V_{IH}, V_{ID} = 8.5–12.5 V, V_{HH} = 9.0 ± 0.5 V, X = Don't Care, SA = Sector Address, A_{IN} = Address In (for Flash Byte Mode, DQ15 = A-1), D_{IN} = Data In, D_{OUT} = Data Out*

Notes:

1. *Other operations except for those indicated in this column are inhibited.*
2. *Do not apply CE#f = V_{IL}, CE1#s = V_{IL} and CE2s = V_{IH} at the same time.*
3. *Don't care or open LB#s or UB#s.*
4. *If WP#/ACC = V_{IL} , the boot sectors will be protected. If WP#/ACC = V_{IH} the boot sectors protection will be removed. If WP#/ACC = V_{ACC} (9V), the program time will be reduced by 40%.*
5. *The sector protect and sector unprotect functions may also be implemented via programming equipment. See the "Sector/Sector Block Protection and Unprotection" section.*
6. *If WP#/ACC = V_{IL}, the two outermost boot sectors remain protected. If WP#/ACC = V_{IH}, the two outermost boot sector protection depends on whether they were last protected or unprotected using the method described in "Sector/Sector Block Protection and Unprotection". If WP#/ACC = V_{HH}, all sectors will be unprotected*

Word/Byte Configuration

The CIOf pin controls whether the device data I/O pins operate in the byte or word configuration. If the CIOf pin is set at logic '1', the device is in word configuration, DQ0–DQ15 are active and controlled by CE# and OE#.

If the CIOf pin is set at logic '0', the device is in byte configuration, and only data I/O pins DQ0–DQ7 are active and controlled by CE# and OE#. The data I/O pins DQ8–DQ14 are tri-stated, and the DQ15 pin is used as an input for the LSB (A-1) address function.

Requirements for Reading Array Data

To read array data from the outputs, the system must drive the CE#f and OE# pins to V_{IL}. CE#f is the power control and selects the device. OE# is the output control and gates array data to the output pins. WE# should remain at V_{IH}. The CIOf pin determines whether the device outputs array data in words or bytes.

The internal state machine is set for reading array data upon device power-up, or after a hardware reset. This ensures that no spurious alteration of the memory content occurs during the power transition. No command is necessary in this mode to obtain array data. Standard microprocessor read cycles that assert valid addresses on the device address inputs produce valid data on the device data outputs. Each bank remains enabled for read access until the command register contents are altered.

See "Requirements for Reading Array Data" for more information. Refer to the AC Flash Read-Only Operations table for timing specifications and to Figure 14 for the timing diagram. I_{CC1} in the DC Characteristics table represents the active current specification for reading array data.

Writing Commands/Command Sequences

To write a command or command sequence (which includes programming data to the device and erasing sectors of memory), the system must drive WE# and CE#f to V_{IL}, and OE# to V_{IH}.

For program operations, the CIOf pin determines whether the device accepts program data in bytes or words. Refer to "Word/Byte Configuration" for more information.

The device features an **Unlock Bypass** mode to facilitate faster programming. Once a bank enters the Unlock Bypass mode, only two write cycles are required to program a word or byte, instead of four. The "Word/Byte Configuration" section has details on programming data to the device using both standard and Unlock Bypass command sequences.

An erase operation can erase one sector, multiple sectors, or the entire device. Tables 4–5 indicate the address space that each sector occupies. The device address space is divided into two banks: Bank 1 contains the boot/parameter sectors, and Bank 2 contains the larger, code sectors of uniform size. A "bank address" is the address bits required to uniquely select a bank. Similarly, a "sector address" is the address bits required to uniquely select a sector.

I_{CC2} in the DC Characteristics table represents the active current specification for the write mode. The AC Characteristics section contains timing specification tables and timing diagrams for write operations.

Accelerated Program Operation

The device offers accelerated program operations through the ACC function. This is one of two functions provided by the WP#/ACC pin. This function is primarily intended to allow faster manufacturing throughput at the factory.

If the system asserts V_{HH} on this pin, the device automatically enters the aforementioned Unlock Bypass mode, temporarily unprotects any protected sectors, and uses the higher voltage on the pin to reduce the time required for program operations. The system would use a two-cycle program command sequence as required by the Unlock Bypass mode. Removing V_{HH} from the WP#/ACC pin returns the device to normal operation. Note that the WP#/ACC pin must not be at V_{HH} for operations other than accelerated programming, or device damage may result. In addition, the WP#/ACC pin must not be left floating or unconnected; inconsistent behavior of the device may result.

Autoselect Functions

If the system writes the autoselect command sequence, the device enters the autoselect mode. The system can then read autoselect codes from the internal register (which is separate from the memory array) on DQ7–DQ0. Standard read cycle timings apply in this mode. Refer to the Autoselect Mode and Autoselect Command Sequence sections for more information.

Simultaneous Read/Write Operations with Zero Latency

This device is capable of reading data from one bank of memory while programming or erasing in the other bank of memory. An erase operation may also be suspended to read from or program to another location within the same bank (except the sector being erased). Figure 21 shows how read and write cycles may be initiated for simultaneous operation with zero latency. I_{CC6} and I_{CC7} in the DC Characteristics table represent the current specifications for read-while-program and read-while-erase, respectively.

Standby Mode

When the system is not reading or writing to the device, it can place the device in the standby mode. In this mode, current consumption is greatly reduced, and the outputs are placed in the high impedance state, independent of the OE# input.

The device enters the CMOS standby mode when the CE#f and RESET# pins are both held at V_{CC} ± 0.3 V. (Note that this is a more restricted voltage range than V_{IH}.) If CE#f and RESET# are held at V_{IH}, but not within V_{CC} ± 0.3 V, the device will be in the standby mode, but the standby current will be greater. The device requires standard access time (t_{CE}) for read access when the device is in either of these standby modes, before it is ready to read data.

If the device is deselected during erasure or programming, the device draws active current until the operation is completed.

I_{CC3} in the DC Characteristics table represents the standby current specification.

Automatic Sleep Mode

The automatic sleep mode minimizes Flash device energy consumption. The device automatically enables this mode when addresses remain stable for t_{ACC} + 30 ns. The automatic sleep mode is independent of the CE#f, WE#, and OE# control signals. Standard address access timings provide new data when addresses are changed. While in sleep mode, output data is latched and always available to the system. I_{CC4} in the DC Characteristics table represents the automatic sleep mode current specification.

RESET#: Hardware Reset Pin

The RESET# pin provides a hardware method of resetting the device to reading array data. When the RESET# pin is driven low for at least a period of t_{RP}, the device immediately terminates any operation in progress, tristates all output pins, and ignores all read/write commands for the duration of the RESET# pulse. The device also resets the internal state machine to reading array data. The operation that was interrupted should be reinitiated once the device is ready to accept another command sequence, to ensure data integrity.

Current is reduced for the duration of the RESET# pulse. When RESET# is held at V_{SS} ± 0.3 V, the device draws CMOS standby current (I_{CC4}). If RESET# is held at V_{IL} but not within V_{SS} ± 0.3 V, the standby current will be greater.

The RESET# pin may be tied to the system reset circuitry. A system reset would thus also reset the Flash memory, enabling the system to read the boot-up firmware from the Flash memory.

If RESET# is asserted during a program or erase operation, the RY/BY# pin remains a “0” (busy) until the internal reset operation is complete, which requires a time of t_{READY} (during Embedded Algorithms). The system can thus monitor RY/BY# to determine whether the reset operation is complete. If RESET# is asserted when a program or erase operation is not executing (RY/BY# pin is “1”), the reset operation is completed within a time of t_{READY} (not during Embedded Algorithms). The system can read data t_{RH} after the RESET# pin returns to V_{IH}.

Refer to the AC Characteristics tables for RESET# parameters and to Figure 15 for the timing diagram.

Output Disable Mode

When the OE# input is at V_{IH}, output from the device is disabled. The output pins are placed in the high impedance state.

Table 3. Device Bank Division

Device Part Number	Bank 1		Bank 2	
	Megabits	Sector Sizes	Megabits	Sector Sizes
Am29DL161D	0.5 Mbit	Eight 8 Kbyte/4 Kword	15.5 Mbit	Thirty-one 64 Kbyte/32 Kword
Am29DL162D	2 Mbit	Eight 8 Kbyte/4 Kword, three 64 Kbyte/32 Kword	14 Mbit	Twenty-eight 64 Kbyte/32 Kword
Am29DL163D	4 Mbit	Eight 8 Kbyte/4 Kword, seven 64 Kbyte/32 Kword	12 Mbit	Twenty-four 64 Kbyte/32 Kword
Am29DL164D	8 Mbit	Eight 8 Kbyte/4 Kword, fifteen 64 Kbyte/32 Kword	8 Mbit	Sixteen 64 Kbyte/32 Kword

Table 4. Sector Addresses for Top Boot Sector Devices

Am29DL164DT	Am29DL163DT	Am29DL162DT	Am29DL161DT	Sector	Sector Address A19–A12	Sector Size (Kbytes/Kwords)	(x8) Address Range	(x16) Address Range
Bank 2	Bank 2	Bank 2	Bank 2	SA0	00000xxx	64/32	000000h-00FFFFh	00000h–07FFFh
				SA1	00001xxx	64/32	010000h-01FFFFh	08000h–0FFFFh
				SA2	00010xxx	64/32	020000h-02FFFFh	10000h–17FFFh
				SA3	00011xxx	64/32	030000h-03FFFFh	18000h–1FFFFh
				SA4	00100xxx	64/32	040000h-04FFFFh	20000h–27FFFh
				SA5	00101xxx	64/32	050000h-05FFFFh	28000h–2FFFFh
				SA6	00110xxx	64/32	060000h-06FFFFh	30000h–37FFFh
				SA7	00111xxx	64/32	070000h-07FFFFh	38000h–3FFFFh
				SA8	01000xxx	64/32	080000h-08FFFFh	40000h–47FFFh
				SA9	01001xxx	64/32	090000h-09FFFFh	48000h–4FFFFh
				SA10	01010xxx	64/32	0A0000h-0AFFFFh	50000h–57FFFh
				SA11	01011xxx	64/32	0B0000h-0BFFFFh	58000h–5FFFFh
				SA12	01100xxx	64/32	0C0000h-0CFFFFh	60000h–67FFFh
				SA13	01101xxx	64/32	0D0000h-0DFFFFh	68000h–6FFFFh
				SA14	01110xxx	64/32	0E0000h-0EFFFFh	70000h–77FFFh
				SA15	01111xxx	64/32	0F0000h-0FFFFFh	78000h–7FFFFh
Bank 1				SA16	10000xxx	64/32	100000h-10FFFFh	80000h–87FFFh
				SA17	10001xxx	64/32	110000h-11FFFFh	88000h–8FFFFh
				SA18	10010xxx	64/32	120000h-12FFFFh	90000h–97FFFh
				SA19	10011xxx	64/32	130000h-13FFFFh	98000h–9FFFFh
				SA20	10100xxx	64/32	140000h-14FFFFh	A0000h–A7FFFh
				SA21	10101xxx	64/32	150000h-15FFFFh	A8000h–AFFFFh
				SA22	10110xxx	64/32	160000h-16FFFFh	B0000h–B7FFFh
				SA23	10111xxx	64/32	170000h-17FFFFh	B8000h–BFFFFh
	Bank 1			SA24	11000xxx	64/32	180000h-18FFFFh	C0000h–C7FFFh
				SA25	11001xxx	64/32	190000h-19FFFFh	C8000h–CFFFFh
				SA26	11010xxx	64/32	1A0000h-1AFFFFh	D0000h–D7FFFh
				SA27	11011xxx	64/32	1B0000h-1BFFFFh	D8000h–DFFFFh
		Bank 1		SA28	11100xxx	64/32	1C0000h-1CFFFFh	E0000h–E7FFFh
				SA29	11101xxx	64/32	1D0000h-1DFFFFh	E8000h–EFFFFh
				SA30	11110xxx	64/32	1E0000h-1EFFFFh	F0000h–F7FFFh
			Bank 1	SA31	11111000	8/4	1F0000h-1F1FFFh	F8000h–F8FFFh
				SA32	11111001	8/4	1F2000h-1F3FFFh	F9000h–F9FFFh
				SA33	11111010	8/4	1F4000h-1F5FFFh	FA000h–FAFFFh
				SA34	11111011	8/4	1F6000h-1F7FFFh	FB000h–FBFFFh
				SA35	11111100	8/4	1F8000h-1F9FFFh	FC000h–FCFFFh
				SA36	11111101	8/4	1FA000h-1FBFFFh	FD000h–FDFFFh
				SA37	11111110	8/4	1FC000h-1FDFFFh	FE000h–FEFFFh
				SA38	11111111	8/4	1FE000h-1FFFFFh	FF000h–FFFFFh

Note: *The address range is A19:A-1 in byte mode (CIOf=V_{IL}) or A19:A0 in word mode (CIOf=V_{IH}). The bank address bits are A19–A15 for Am29DL161DT, A19–A17 for Am29DL162DT, A19 and A18 for Am29DL163DT, and A19 for Am29DL164DT*

Table 5. SecSi Sector Addresses for Top Boot Devices

Device	Sector Address A19–A12	Sector Size	(x8) Address Range	(x16) Address Range
Am29DL16xDT	11111XXX	64/32	1F0000h-1FFFFFh	F8000h–FFFFFh

Table 6. Sector Addresses for Bottom Boot Sector Devices

Am29DL164DB	Am29DL163DB	Am29DL162DB	Am29DL161DB	Sector	Sector Address A19–A12	Sector Size (Kbytes/Kwords)	(x8) Address Range	(x16) Address Range
Bank 1	Bank 1	Bank 1	Bank 1	SA0	00000000	8/4	000000h-001FFFh	00000h-00FFFh
				SA1	00000001	8/4	002000h-003FFFh	01000h-01FFFh
				SA2	00000010	8/4	004000h-005FFFh	02000h-02FFFh
				SA3	00000011	8/4	006000h-007FFFh	03000h-03FFFh
				SA4	00000100	8/4	008000h-009FFFh	04000h-04FFFh
				SA5	00000101	8/4	00A000h-00BFFFh	05000h-05FFFh
				SA6	00000110	8/4	00C000h-00DFFFh	06000h-06FFFh
				SA7	00000111	8/4	00E000h-00FFFFh	07000h-07FFFh
			Bank 2	SA8	00001XXX	64/32	010000h-01FFFFh	08000h-0FFFFh
				SA9	00010XXX	64/32	020000h-02FFFFh	10000h-17FFFh
				SA10	00011XXX	64/32	030000h-03FFFFh	18000h-1FFFFh
		Bank 2		SA11	00100XXX	64/32	040000h-04FFFFh	20000h-27FFFh
				SA12	00101XXX	64/32	050000h-05FFFFh	28000h-2FFFFh
				SA13	00110XXX	64/32	060000h-06FFFFh	30000h-37FFFh
				SA14	00111XXX	64/32	070000h-07FFFFh	38000h-3FFFFh
	Bank 2			SA15	01000XXX	64/32	080000h-08FFFFh	40000h-47FFFh
				SA16	01001XXX	64/32	090000h-09FFFFh	48000h-4FFFFh
				SA17	01010XXX	64/32	0A0000h-0AFFFFh	50000h-57FFFh
				SA18	01011XXX	64/32	0B0000h-0BFFFFh	58000h-5FFFFh
				SA19	01100XXX	64/32	0C0000h-0CFFFFh	60000h-67FFFh
				SA20	01101XXX	64/32	0D0000h-0DFFFFh	68000h-6FFFFh
				SA21	01110XXX	64/32	0E0000h-0EFFFFh	70000h-77FFFh
				SA22	01111XXX	64/32	0F0000h-0FFFFFh	78000h-7FFFFh
Bank 2				SA23	10000XXX	64/32	100000h-10FFFFh	80000h-87FFFh
				SA24	10001XXX	64/32	110000h-11FFFFh	88000h-8FFFFh
				SA25	10010XXX	64/32	120000h-12FFFFh	90000h-97FFFh
				SA26	10011XXX	64/32	130000h-13FFFFh	98000h-9FFFFh
				SA27	10100XXX	64/32	140000h-14FFFFh	A0000h-A7FFFh
				SA28	10101XXX	64/32	150000h-15FFFFh	A8000h-AFFFFh
				SA29	10110XXX	64/32	160000h-16FFFFh	B0000h-B7FFFh
				SA30	10111XXX	64/32	170000h-17FFFFh	B8000h-BFFFFh
				SA31	11000XXX	64/32	180000h-18FFFFh	C0000h-C7FFFh
				SA32	11001XXX	64/32	190000h-19FFFFh	C8000h-CFFFFh
				SA33	11010XXX	64/32	1A0000h-1AFFFFh	D0000h-D7FFFh
				SA34	11011XXX	64/32	1B0000h-1BFFFFh	D8000h-DFFFFh
				SA35	11100XXX	64/32	1C0000h-1CFFFFh	E0000h-E7FFFh
				SA36	11101XXX	64/32	1D0000h-1DFFFFh	E8000h-EFFFFh
				SA37	11110XXX	64/32	1E0000h-1EFFFFh	F0000h-F7FFFh
				SA38	11111XXX	64/32	1F0000h-1FFFFFh	F8000h-FFFFFh

Note: *The address range is A19:A-1 in byte mode (BYTE#=V_{IL}) or A19:A0 in word mode (BYTE#=V_{IH}). The bank address bits are A19–A15 for Am29DL161DB, A19–A17 for Am29DL162DB, A19 and A18 for Am29DL163DB, and A19 for Am29DL164DB.*

Table 7. SecSi™ Addresses for Bottom Boot Devices

Device	Sector Address A19–A12	Sector Size	(x8) Address Range	(x16) Address Range
Am29DL16xDB	00000XXX	64/32	000000h-00FFFFh	00000h-07FFFh

Autoselect Mode

The autoselect mode provides manufacturer and device identification, and sector protection verification, through identifier codes output on DQ7–DQ0. This mode is primarily intended to automatically match a device to be programmed with its corresponding programming algorithm. However, the autoselect codes can also be accessed in-system through the command register.

To access the autoselect codes in-system, the host system can issue the autoselect command via the command register, as shown in Table 14. This method does not require V_{ID}. Refer to the Autoselect Command Sequence section for more information.

Sector/Sector Block Protection and Unprotection

(Note: For the following discussion, the term “sector” applies to both sectors and sector blocks. A sector block consists of two or more adjacent sectors that are protected or unprotected at the same time (see Tables 8 and 9).

Table 8. Top Boot Sector/Sector Block Addresses for Protection/Unprotection

Sector / Sector Block	A19–A12	Sector / Sector Block Size
SA0	00000XXX	64 Kbytes
SA1-SA3	00001XXX, 00010XXX, 00011XXX	192 (3x64) Kbytes
SA4-SA7	001XXXXX	256 (4x64) Kbytes
SA8-SA11	010XXXXX	256 (4x64) Kbytes
SA12-SA15	011XXXXX	256 (4x64) Kbytes
SA16-SA19	100XXXXX	256 (4x64) Kbytes
SA20-SA23	101XXXXX	256 (4x64) Kbytes
SA24-SA27	110XXXXX	256 (4x64) Kbytes
SA28-SA30	11100XXX, 11101XXX, 11110XXX	192 (3x64) Kbytes
SA31	11111000	8 Kbytes
SA32	11111001	8 Kbytes
SA33	11111010	8 Kbytes
SA34	11111011	8 Kbytes
SA35	11111100	8 Kbytes
SA36	11111101	8 Kbytes
SA37	11111110	8 Kbytes
SA38	11111111	8 Kbytes

Table 9. Bottom Boot Sector/Sector Block Addresses for Protection/Unprotection

Sector / Sector Block	A19–A12	Sector / Sector Block Size
SA38	11111XXX	64 Kbytes
SA37-SA35	11110XXX, 11101XXX, 11100XXX	192 (3x64) Kbytes
SA34-SA31	110XXXXX	256 (4x64) Kbytes
SA30-SA27	101XXXXX	256 (4x64) Kbytes
SA26-SA23	100XXXXX	256 (4x64) Kbytes
SA22-SA19	011XXXXX	256 (4x64) Kbytes
SA18-SA15	010XXXXX	256 (4x64) Kbytes
SA14-SA11	001XXXXX	256 (4x64) Kbytes
SA10-SA8	00001XXX, 00010XXX, 00011XXX	192 (3x64) Kbytes
SA7	00000111	8 Kbytes
SA6	00000110	8 Kbytes
SA5	00000101	8 Kbytes
SA4	00000100	8 Kbytes
SA3	00000011	8 Kbytes
SA2	00000010	8 Kbytes
SA1	00000001	8 Kbytes
SA0	00000000	8 Kbytes

The hardware sector protection feature disables both program and erase operations in any sector. The hardware sector unprotection feature re-enables both program and erase operations in previously protected sectors. Sector protection and unprotection can be implemented as follows.

Sector protection/unprotection requires V_{ID} on the RESET# pin only, and can be implemented either in-system or via programming equipment. Figure 2 shows the algorithms and Figure 26 shows the timing diagram. This method uses standard microprocessor bus cycle timing. For sector unprotect, all unprotected sectors must first be protected prior to the first sector unprotect write cycle. Note that the sector unprotect algorithm unprotects all sectors in parallel. All previously protected sectors must be individually re-protected. To change data in protected sectors effi-

The device is shipped with all sectors unprotected.

It is possible to determine whether a sector is protected or unprotected. See the Autoselect Mode section for details.

Write Protect (WP#)

The Write Protect function provides a hardware method of protecting certain boot sectors without using V_{ID}. This function is one of two provided by the WP#/ACC pin.

If the system asserts V_{IL} on the WP#/ACC pin, the device disables program and erase functions in the two "outermost" 8 Kbyte boot sectors independently of whether those sectors were protected or unprotected using the method described in "Sector/Sector Block Protection and Unprotection". The two outermost 8 Kbyte boot sectors are the two sectors containing the lowest addresses in a top-boot-configured device, or the two sectors containing the highest addresses in a top-boot-configured device.

If the system asserts V_{IH} on the WP#/ACC pin, the device reverts to whether the two outermost 8 Kbyte boot sectors were last set to be protected or unprotected. That is, sector protection or unprotection for these two sectors depends on whether they were last protected or unprotected using the method described in "Sector/Sector Block Protection and Unprotection".

Note that the WP#/ACC pin must not be left floating or unconnected; inconsistent behavior of the device may result.

Temporary Sector/Sector Block Unprotect

(Note: For the following discussion, the term "sector" applies to both sectors and sector blocks. A sector block consists of two or more adjacent sectors that are protected or unprotected at the same time (see Tables 8 and 9).

This feature allows temporary unprotection of previously protected sectors to change data in-system. The Sector Unprotect mode is activated by setting the RESET# pin to V_{ID} (8.5 V – 12.5 V). During this mode, formerly protected sectors can be programmed or erased by selecting the sector addresses. Once V_{ID} is removed from the RESET# pin, all the previously protected sectors are protected again. Figure 1 shows the algorithm, and Figure 25 shows the timing diagrams, for this feature.

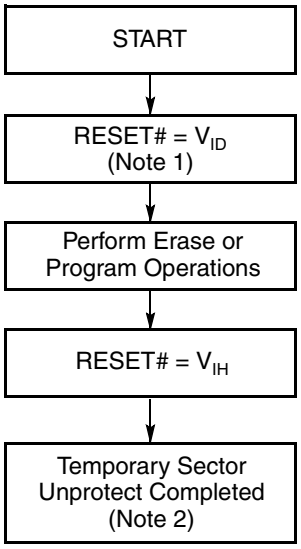

Notes:

1. *All protected sectors unprotected (If WP#/ACC = V_{IL}, outermost boot sectors will remain protected).*
2. *All previously protected sectors are protected once again.*

Figure 1. Temporary Sector Unprotect Operation

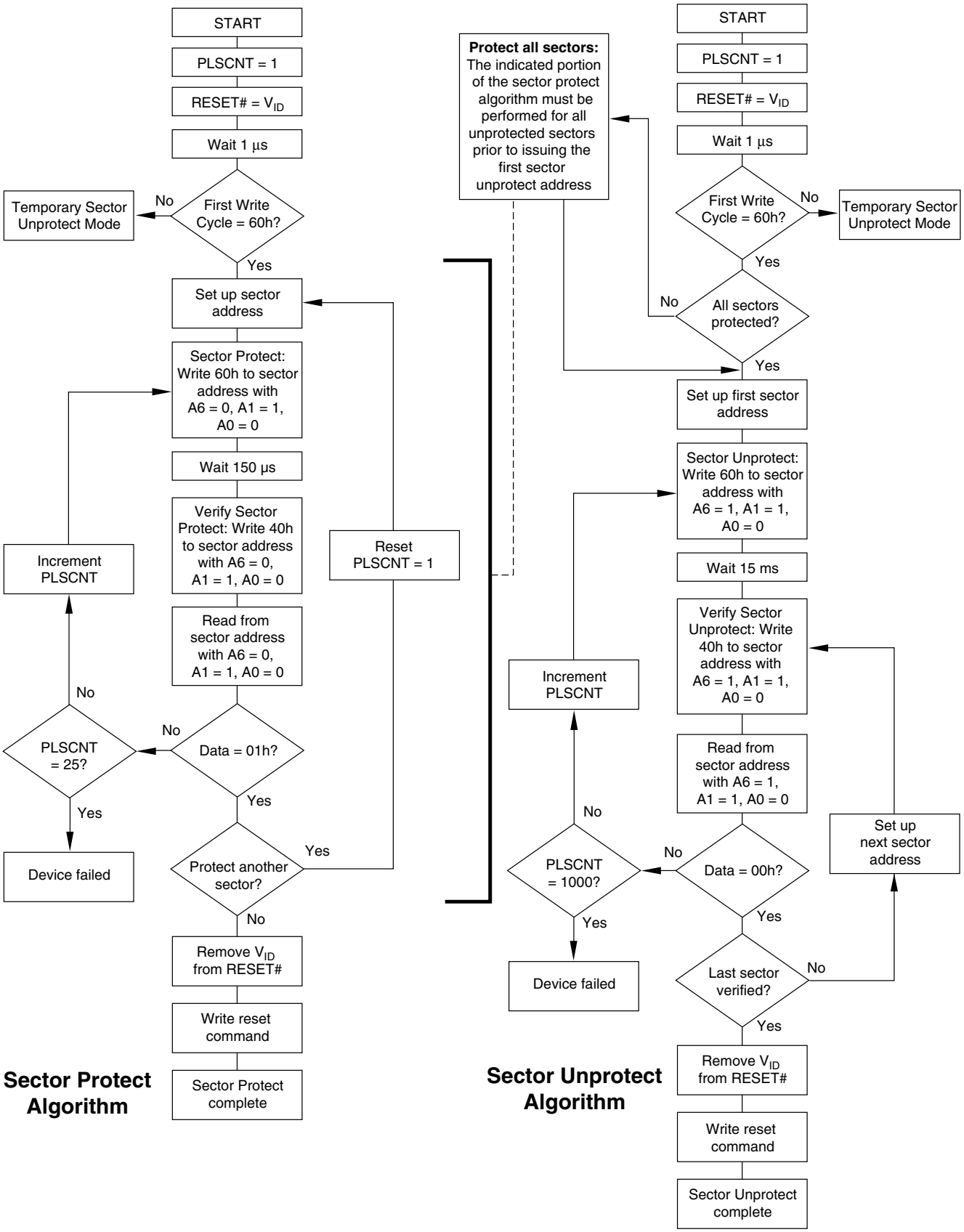

Note: The term "sector" in the figure applies to both sectors and sector blocks.

Figure 2. In-System Sector/Sector Block Protect and Unprotect Algorithms

SecSi (Secured Silicon) Sector Flash Memory Region

The SecSi (Secured Silicon) Sector feature provides a Flash memory region that enables permanent part identification through an Electronic Serial Number (ESN). The SecSi Sector is 64 Kbytes in length, and uses a SecSi Sector Indicator Bit to indicate whether or not the SecSi Sector is locked when shipped from the factory. This bit is permanently set at the factory and cannot be changed, which prevents cloning of a factory locked part. This ensures the security of the ESN once the product is shipped to the field. **Current version of this device has 64 Kbytes; future versions will have only 256 bytes. This should be considered during system design.**

AMD offers the device with the SecSi Sector either factory locked or customer lockable. The factory-locked version is always protected when shipped from the factory, and has the SecSi Sector Indicator Bit permanently set to a "1." The customer-lockable version is shipped with the unprotected, allowing customers to utilize the that sector in any manner they choose. The customer-lockable version has the SecSi Sector Indicator Bit permanently set to a "0." Thus, the SecSi Sector Indicator Bit prevents customer-lockable devices from being used to replace devices that are factory locked.

The system accesses the SecSi Sector through a command sequence (see "Enter SecSi Sector/Exit SecSi Sector Command Sequence"). After the system has written the Enter SecSi Sector command sequence, it may read the SecSi Sector by using the addresses normally occupied by the boot sectors. This mode of operation continues until the system issues the Exit SecSi Sector command sequence, or until power is removed from the device. On power-up, or following a hardware reset, the device reverts to sending commands to the boot sectors.

Factory Locked: SecSi Sector Programmed and Protected At the Factory

In a factory locked device, the SecSi Sector is protected when the device is shipped from the factory. The SecSi Sector cannot be modified in any way. The device is available preprogrammed with a random, secure ESN only

In devices that have an ESN, the Top Boot device will have the 16-byte ESN, with the starting address of the ESN will be at the bottom of the lowest 8 Kbyte boot sector at addresses F8000h–F8007h in word mode (or 1F0000h–1F000Fh in byte mode).

Customer Lockable: SecSi Sector NOT Programmed or Protected At the Factory

If the security feature is not required, the SecSi Sector can be treated as an additional Flash memory space, expanding the size of the available Flash array by 64 Kbytes. **Current version of this device has 64 Kbytes; future versions will have only 256 bytes. This should be considered during system design.** The SecSi Sector can be read, programmed, and erased as often as required. Note that the accelerated programming (ACC) and unlock bypass functions are not available when programming the SecSi Sector.

The SecSi Sector area can be protected using one of the following procedures:

- Write the three-cycle Enter SecSi Sector Region command sequence, and then follow the in-system sector protect algorithm as shown in Figure 2, except that *RESET# may be at either V_{IH} or V_{ID}*. This allows in-system protection of the without raising any device pin to a high voltage. Note that this method is only applicable to the SecSi Sector.
- Write the three-cycle Enter SecSi Sector Region command sequence, and then use the alternate method of sector protection described in the "Sector/Sector Block Protection and Unprotection".

Once the SecSi Sector is locked and verified, the system must write the Exit SecSi Sector Region command sequence to return to reading and writing the remainder of the array.

The SecSi Sector protection must be used with caution since, once protected, there is no procedure available for unprotecting the SecSi Sector area and none of the bits in the SecSi Sector memory space can be modified in any way.

Hardware Data Protection

The command sequence requirement of unlock cycles for programming or erasing provides data protection against inadvertent writes (refer to Table 14 for command definitions). In addition, the following hardware data protection measures prevent accidental erasure or programming, which might otherwise be caused by spurious system level signals during V_{CC} power-up and power-down transitions, or from system noise.

Low V_{CC} Write Inhibit

When V_{CC} is less than V_{LKO}, the device does not accept any write cycles. This protects data during V_{CC} power-up and power-down. The command register and all internal program/erase circuits are disabled, and the device resets to reading array data. Subsequent writes are ignored until V_{CC} is greater than V_{LKO}. The system must provide the proper signals to the control pins to prevent unintentional writes when V_{CC} is greater than V_{LKO}.

Write Pulse "Glitch" Protection

Noise pulses of less than 5 ns (typical) on OE#, CE#f or WE# do not initiate a write cycle.

Logical Inhibit

Write cycles are inhibited by holding any one of OE# = V_{IL}, CE#f = V_{IH} or WE# = V_{IH}. To initiate a write cycle, CE#f and WE# must be a logical zero while OE# is a logical one.

Power-Up Write Inhibit

If WE# = CE#f = V_{IL} and OE# = V_{IH} during power up, the device does not accept commands on the rising edge of WE#. The internal state machine is automatically reset to reading array data on power-up.

COMMON FLASH MEMORY INTERFACE (CFI)

The Common Flash Interface (CFI) specification outlines device and host system software interrogation handshake, which allows specific vendor-specified software algorithms to be used for entire families of devices. Software support can then be device-independent, JEDEC ID-independent, and forward- and backward-compatible for the specified flash device families. Flash vendors can standardize their existing interfaces for long-term compatibility.

This device enters the CFI Query mode when the system writes the CFI Query command, 98h, to address 55h in word mode (or address AAh in byte mode), any time the device is ready to read array data. The system can read CFI information at the addresses given in Tables 10–13. To terminate reading CFI data, the system must write the reset command. The CFI Query mode is not accessible when the device is executing an Embedded Program or embedded erase algorithm.

The system can also write the CFI query command when the device is in the autoselect mode. The device enters the CFI query mode, and the system can read CFI data at the addresses given in Tables 10–13. The system must write the reset command to return the device to the autoselect mode.

For further information, please refer to the CFI Specification and CFI Publication 100, available via the World Wide Web at http://www.amd.com/products/nvd/overview/cfi.html. Alternatively, contact an AMD representative for copies of these documents.

Table 10. CFI Query Identification String

Addresses (Word Mode)	Data	Description
10h 11h 12h	0051h 0052h 0059h	Query Unique ASCII string "QRY"
13h 14h	0002h 0000h	Primary OEM Command Set
15h 16h	0040h 0000h	Address for Primary Extended Table
17h 18h	0000h 0000h	Alternate OEM Command Set (00h = none exists)
19h 1Ah	0000h 0000h	Address for Alternate OEM Extended Table (00h = none exists)

Table 11. System Interface String

Addresses (Word Mode)	Data	Description
1Bh	0027h	V_{CC} Min. (write/erase) D7–D4: volt, D3–D0: 100 millivolt
1Ch	0036h	V_{CC} Max. (write/erase) D7–D4: volt, D3–D0: 100 millivolt
1Dh	0000h	V_{PP} Min. voltage (00h = no V_{PP} pin present)
1Eh	0000h	V_{PP} Max. voltage (00h = no V_{PP} pin present)
1Fh	0004h	Typical timeout per single byte/word write 2^N µs
20h	0000h	Typical timeout for Min. size buffer write 2^N µs (00h = not supported)
21h	000Ah	Typical timeout per individual block erase 2^N ms
22h	0000h	Typical timeout for full chip erase 2^N ms (00h = not supported)
23h	0005h	Max. timeout for byte/word write 2^N times typical
24h	0000h	Max. timeout for buffer write 2^N times typical
25h	0004h	Max. timeout per individual block erase 2^N times typical
26h	0000h	Max. timeout for full chip erase 2^N times typical (00h = not supported)

Table 12. Device Geometry Definition

Addresses (Word Mode)	Data	Description
27h	0016h	Device Size = 2^N byte
28h 29h	0002h 0000h	Flash Device Interface description (refer to CFI publication 100)
2Ah 2Bh	0000h 0000h	Max. number of byte in multi-byte write = 2^N (00h = not supported)
2Ch	0002h	Number of Erase Block Regions within device
2Dh 2Eh 2Fh 30h	0007h 0000h 0020h 0000h	Erase Block Region 1 Information (refer to the CFI specification or CFI publication 100)
31h 32h 33h 34h	003Eh 0000h 0000h 0001h	Erase Block Region 2 Information
35h 36h 37h 38h	0000h 0000h 0000h 0000h	Erase Block Region 3 Information
39h 3Ah 3Bh 3Ch	0000h 0000h 0000h 0000h	Erase Block Region 4 Information

Table 13. Primary Vendor-Specific Extended Query

Addresses (Word Mode)	Data	Description
40h 41h 42h	0050h 0052h 0049h	Query-unique ASCII string “PRI”
43h	0031h	Major version number, ASCII
44h	0033h	Minor version number, ASCII
45h	0001h	Address Sensitive Unlock (Bits 1-0) 0 = Required, 1 = Not Required Silicon Revision Number (Bits 7-2)
46h	0002h	Erase Suspend 0 = Not Supported, 1 = To Read Only, 2 = To Read & Write
47h	0001h	Sector Protect 0 = Not Supported, X = Number of sectors in per group
48h	0001h	Sector Temporary Unprotect 00 = Not Supported, 01 = Supported
49h	0004h	Sector Protect/Unprotect scheme 04 = 29LV800 mode
4Ah	00XXh (See Note)	Simultaneous Operation 00 = Not Supported, X= Number of Sectors in Bank 2 (Uniform Bank)
4Bh	0000h	Burst Mode Type 00 = Not Supported, 01 = Supported
4Ch	0000h	Page Mode Type 00 = Not Supported, 01 = 4 Word Page, 02 = 8 Word Page
4Dh	0085h	ACC (Acceleration) Supply Minimum 00h = Not Supported, D7-D4: Volt, D3-D0: 100 mV
4Eh	0095h	ACC (Acceleration) Supply Maximum 00h = Not Supported, D7-D4: Volt, D3-D0: 100 mV
4Fh	000Xh	Top/Bottom Boot Sector Flag 02h = Bottom Boot Device, 03h = Top Boot Device

Note:
The number of sectors in Bank 2 is device dependent.
Am29DL161 = 1Fh
Am29DL162 = 1Ch
Am29DL163 = 18h
Am29DL164 = 10h

COMMAND DEFINITIONS

Writing specific address and data commands or sequences into the command register initiates device operations. Table 14 defines the valid register command sequences. Writing **incorrect address and data values** or writing them in the **improper sequence** may place the device in an unknown state.

All addresses are latched on the falling edge of WE# or CE#f, whichever happens later. All data is latched on the rising edge of WE# or CE#f, whichever happens first. Refer to the AC Characteristics section for timing diagrams.

Reading Array Data

The device is automatically set to reading array data after device power-up. No commands are required to retrieve data. Each bank is ready to read array data after completing an Embedded Program or Embedded Erase algorithm.

After the device accepts an Erase Suspend command, the corresponding bank enters the erase-suspend-read mode, after which the system can read data from any non-erase-suspended sector within the same bank. After completing a programming operation in the Erase Suspend mode, the system may once again read array data with the same exception. See the Erase Suspend/Erase Resume Commands section for more information.

The system *must* issue the reset command to return a bank to the read (or erase-suspend-read) mode if DQ5 goes high during an active program or erase operation, or if the bank is in the autoselect mode. See the next section, Reset Command, for more information.

See also Requirements for Reading Array Data in the Device Bus Operations section for more information. The Flash Read-Only Operations table provides the read parameters, and Figure 14 shows the timing diagram.

Reset Command

Writing the reset command resets the banks to the read or erase-suspend-read mode. Address bits are don't cares for this command.

The reset command may be written between the sequence cycles in an erase command sequence before erasing begins. This resets the bank to which the system was writing to reading array data. Once erasure begins, however, the device ignores reset commands until the operation is complete.

The reset command may be written between the sequence cycles in a program command sequence before programming begins. This resets the bank to which the system was writing to reading array data. If the program command sequence is written to a bank that is in the Erase Suspend mode, writing the reset command returns that bank to the erase-suspend-read mode. Once programming begins, however, the device ignores reset commands until the operation is complete.

The reset command may be written between the sequence cycles in an autoselect command sequence. Once in the autoselect mode, the reset command must be written to return to reading array data. If a bank entered the autoselect mode while in the Erase Suspend mode, writing the reset command returns that bank to the erase-suspend-read mode.

If DQ5 goes high during a program or erase operation, writing the reset command returns the banks to reading array data (or erase-suspend-read mode if that bank was in Erase Suspend).

Autoselect Command Sequence

The autoselect command sequence allows the host system to access the manufacturer and device codes, and determine whether or not a sector is protected. Table 14 shows the address and data requirements. The autoselect command sequence may be written to an address within a bank that is either in the read or erase-suspend-read mode. The autoselect command may not be written while the device is actively programming or erasing in the other bank.

The autoselect command sequence is initiated by first writing two unlock cycles. This is followed by a third write cycle that contains the bank address and the autoselect command. The bank then enters the autoselect mode. The system may read at any address within the same bank any number of times without initiating another autoselect command sequence:

- A read cycle at address (BA)XX00h (where BA is the bank address) returns the manufacturer code.
- A read cycle at address (BA)XX01h in word mode (or (BA)XX02h in byte mode) returns the device code.
- A read cycle to an address containing a sector address (SA) within the same bank, and the address 02h on A7–A0 in word mode (or the address 04h on A6–A-1 in byte mode) returns 01h if the sector is protected, or 00h if it is unprotected. (Refer to Tables 4–5 for valid sector addresses).

The system must write the reset command to return to reading array data (or erase-suspend-read mode if the bank was previously in Erase Suspend).

Enter SecSi Sector/Exit SecSi Sector Command Sequence

The system can access the SecSi Sector region by issuing the three-cycle Enter SecSi Sector command sequence. The device continues to access the SecSi Sector region until the system issues the four-cycle Exit SecSi Sector command sequence. The Exit SecSi Sector command sequence returns the device to normal operation. The SecSi Sector is not accessible when the device is executing an Embedded Program or Embedded Erase algorithm. Table 14 shows the address and data requirements for both command sequences. See also "SecSi (Secured Silicon) Sector Flash Memory Region" for further information. Note that a hardware reset (RESET#=V_{IL}) will reset the device to reading array data.

Byte/Word Program Command Sequence

The system may program the device by word or byte, depending on the state of the CIOf pin. Programming is a four-bus-cycle operation. The program command sequence is initiated by writing two unlock write cycles, followed by the program set-up command. The program address and data are written next, which in turn initiate the Embedded Program algorithm. The system is *not* required to provide further controls or timings. The device automatically provides internally generated program pulses and verifies the programmed cell margin. Table 14 shows the address and data requirements for the byteword program command sequence.

When the Embedded Program algorithm is complete, that bank then returns to reading array data and addresses are no longer latched. The system can determine the status of the program operation by using DQ7, DQ6, or RY/BY#. Refer to the Write Operation Status section for information on these status bits.

Any commands written to the device during the Embedded Program Algorithm are ignored. Note that a **hardware reset** immediately terminates the program operation. The program command sequence should be reinitiated once that bank has returned to reading array data, to ensure data integrity.

Programming is allowed in any sequence and across sector boundaries. **A bit cannot be programmed from "0" back to a "1."** Attempting to do so may cause that bank to set DQ5 = 1, or cause the DQ7 and DQ6 status bits to indicate the operation was successful. However, a succeeding read will show that the data is still "0." Only erase operations can convert a "0" to a "1."

Unlock Bypass Command Sequence

The unlock bypass feature allows the system to program bytes or words to a bank faster than using the standard program command sequence. The unlock bypass command sequence is initiated by first writing two unlock cycles. This is followed by a third write cycle containing the unlock bypass command, 20h. That bank then enters the unlock bypass mode. A two-cycle unlock bypass program command sequence is all that is required to program in this mode. The first cycle in this sequence contains the unlock bypass program command, A0h; the second cycle contains the program address and data. Additional data is programmed in the same manner. This mode dispenses with the initial two unlock cycles required in the standard program command sequence, resulting in faster total programming time. Table 14 shows the requirements for the command sequence.

During the unlock bypass mode, only the Unlock Bypass Program and Unlock Bypass Reset commands are valid. To exit the unlock bypass mode, the system must issue the two-cycle unlock bypass reset command sequence. The bank then returns to the reading array data.

The device offers accelerated program operations through the WP#/ACC pin. When the system asserts V_{HH} on the WP#/ACC pin, the device automatically enters the Unlock Bypass mode. The system may then write the two-cycle Unlock Bypass program command sequence. The device uses the higher voltage on the WP#/ACC pin to accelerate the operation. Note that the WP#/ACC pin must not be at V_{HH} any operation other than accelerated programming, or device damage may result. In addition, the WP#/ACC pin must not be left floating or unconnected; inconsistent behavior of the device may result.

Figure 3 illustrates the algorithm for the program operation. Refer to the Flash Erase and Program Operations table in the AC Characteristics section for parameters, and Figure 18 for timing diagrams.

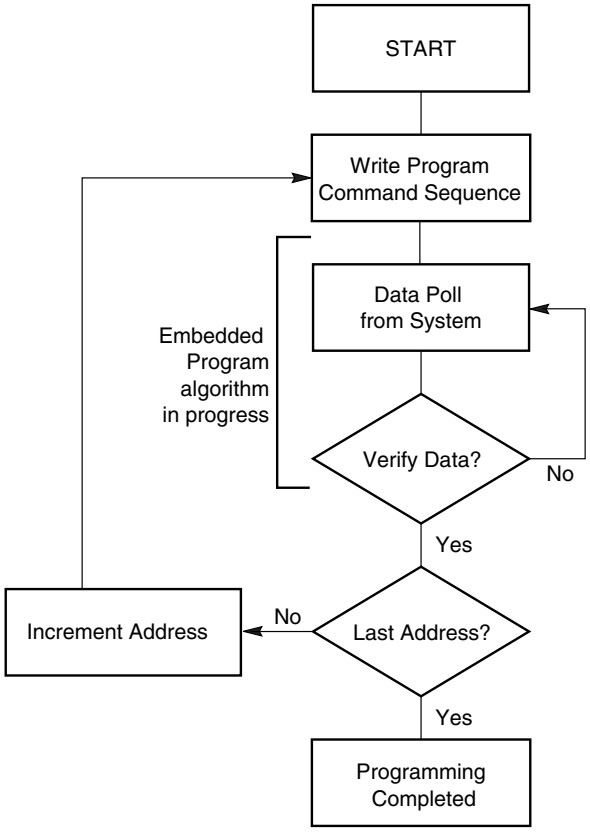

Note: *See Table 14 for program command sequence.*

Figure 3. Program Operation

Chip Erase Command Sequence

Chip erase is a six bus cycle operation. The chip erase command sequence is initiated by writing two unlock cycles, followed by a set-up command. Two additional unlock write cycles are then followed by the chip erase command, which in turn invokes the Embedded Erase algorithm. The device does *not* require the system to preprogram prior to erase. The Embedded Erase algorithm automatically preprograms and verifies the entire memory for an all zero data pattern prior to electrical erase. The system is not required to provide any controls or timings during these operations. Table 14 shows the address and data requirements for the chip erase command sequence.

When the Embedded Erase algorithm is complete, that bank returns to reading array data and addresses are no longer latched. The system can determine the status of the erase operation by using DQ7, DQ6, DQ2, or RY/BY#. Refer to the Write Operation Status section for information on these status bits.

Any commands written during the chip erase operation are ignored. However, note that a **hardware reset** immediately terminates the erase operation. If that occurs, the chip erase command sequence should be reinitiated once that bank has returned to reading array data, to ensure data integrity.

Figure 4 illustrates the algorithm for the erase operation. Refer to the Flash Erase and Program Operations tables in the AC Characteristics section for parameters, and Figure 20 section for timing diagrams.

Sector Erase Command Sequence

Sector erase is a six bus cycle operation. The sector erase command sequence is initiated by writing two unlock cycles, followed by a set-up command. Two additional unlock cycles are written, and are then followed by the address of the sector to be erased, and the sector erase command. Table 14 shows the address and data requirements for the sector erase command sequence.

The device does *not* require the system to preprogram prior to erase. The Embedded Erase algorithm automatically programs and verifies the entire memory for an all zero data pattern prior to electrical erase. The system is not required to provide any controls or timings during these operations.

After the command sequence is written, a sector erase time-out of 50 µs occurs. During the time-out period, additional sector addresses and sector erase commands may be written. Loading the sector erase buffer may be done in any sequence, and the number of sectors may be from one sector to all sectors. The time between these additional cycles must be less than 50 µs, otherwise erasure may begin. Any sector erase address and command following the exceeded time-out may or may not be accepted. It is recommended that processor interrupts be disabled during this time to ensure all commands are accepted. The interrupts can be re-enabled after the last Sector Erase command is written. **Any command other than Sector Erase or Erase Suspend during the time-out period resets that bank to reading array data.** The system must rewrite the command sequence and any additional addresses and commands.

The system can monitor DQ3 to determine if the sector erase timer has timed out (See the section on DQ3: Sector Erase Timer.). The time-out begins from the rising edge of the final WE# pulse in the command sequence.

When the Embedded Erase algorithm is complete, the bank returns to reading array data and addresses are no longer latched. Note that while the Embedded Erase operation is in progress, the system can read data from the non-erasing bank. The system can determine the status of the erase operation by reading DQ7, DQ6, DQ2, or RY/BY# in the erasing bank. Refer

to the Write Operation Status section for information on these status bits.

Once the sector erase operation has begun, only the Erase Suspend command is valid. All other commands are ignored. However, note that a **hardware reset** immediately terminates the erase operation. If that occurs, the sector erase command sequence should be reinitiated once that bank has returned to reading array data, to ensure data integrity.

Figure 4 illustrates the algorithm for the erase operation. Refer to the Flash Erase and Program Operations tables in the AC Characteristics section for parameters, and Figure 20 section for timing diagrams.

Erase Suspend/Erase Resume Commands

The Erase Suspend command, B0h, allows the system to interrupt a sector erase operation and then read data from, or program data to, any sector not selected for erasure. The bank address is required when writing this command. This command is valid only during the sector erase operation, including the 50 µs time-out period during the sector erase command sequence. The Erase Suspend command is ignored if written during the chip erase operation or Embedded Program algorithm.

When the Erase Suspend command is written during the sector erase operation, the device requires a maximum of 20 µs to suspend the erase operation. However, when the Erase Suspend command is written during the sector erase time-out, the device immediately terminates the time-out period and suspends the erase operation.

After the erase operation has been suspended, the bank enters the erase-suspend-read mode. The system can read data from or program data to any sector not selected for erasure. (The device “erase suspends” all sectors selected for erasure.) Reading at any address within erase-suspended sectors produces status information on DQ7–DQ0. The system can use DQ7, or DQ6 and DQ2 together, to determine if a sector is actively erasing or is erase-suspended. Refer to the Write Operation Status section for information on these status bits.

After an erase-suspended program operation is complete, the bank returns to the erase-suspend-read mode. The system can determine the status of the program operation using the DQ7 or DQ6 status bits, just as in the standard Byte Program operation. Refer to the Write Operation Status section for more information.

In the erase-suspend-read mode, the system can also issue the autoselect command sequence. Refer to the Autoselect Mode and Autoselect Command Sequence sections for details.

To resume the sector erase operation, the system must write the Erase Resume command. The bank address of the erase-suspended bank is required when writing this command. Further writes of the Resume command are ignored. Another Erase Suspend command can be written after the chip has resumed erasing.

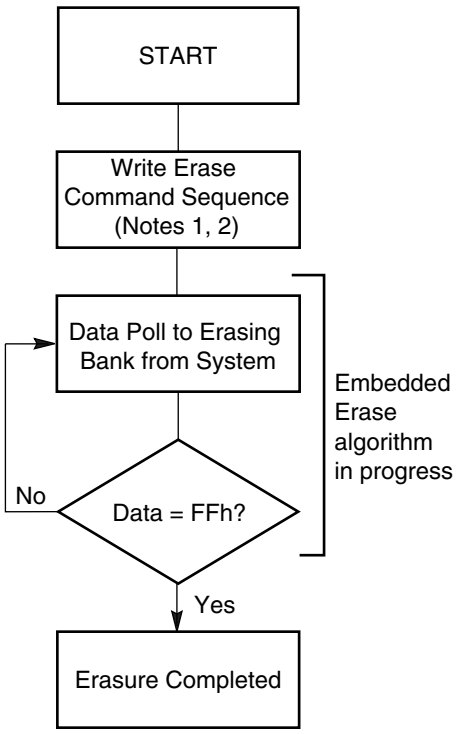

Notes:

1. *See Table 14 for erase command sequence.*
2. *See the section on DQ3 for information on the sector erase timer.*

Figure 4. Erase Operation

Table 14. Command Definitions

Command Sequence (Note 1)			Cycles	Bus Cycles (Notes 2–5)											
				First		Second		Third		Fourth		Fifth		Sixth	
				Addr	Data	Addr	Data	Addr	Data	Addr	Data	Addr	Data	Addr	Data
Read (Note 6)			1	RA	RD										
Reset (Note 7)			1	XXX	F0										
Autoselect (Note 8)	Manufacturer ID	Word	4	555	AA	2AA	55	(BA)555	90	(BA)X00	01				
	Device ID	Word	4	555	AA	2AA	55	(BA)555	90	(BA)X01	see Table 15				
	SecSi Sector Factory Protect (Note 9)	Word	4	555	AA	2AA	55	(BA)555	90	(BA)X03	81/01				
	Sector Protect Verify (Note 10)	Word	4	555	AA	2AA	55	(BA)555	90	(SA)X02	00/01				
Enter SecSi Sector Region		Word	3	555	AA	2AA	55	555	88						
Exit SecSi Sector Region		Word	4	555	AA	2AA	55	555	90	XXX	00				
Program		Word	4	555	AA	2AA	55	555	A0	PA	PD				
Unlock Bypass		Word	3	555	AA	2AA	55	555	20						
Unlock Bypass Program (Note 11)			2	XXX	A0	PA	PD								
Unlock Bypass Reset (Note 12)			2	XXX	90	XXX	00								
Chip Erase		Word	6	555	AA	2AA	55	555	80	555	AA	2AA	55	555	10
Sector Erase		Word	6	555	AA	2AA	55	555	80	555	AA	2AA	55	SA	30
Erase Suspend (Note 13)			1	BA	B0										
Erase Resume (Note 14)			1	BA	30										
CFI Query (Note 15)		Word	1	55	98										

Legend:

X = Don't care

RA = Address of the memory location to be read.

RD = Data read from location RA during read operation.

PA = Address of the memory location to be programmed. Addresses latch on the falling edge of the WE# or CE#f pulse, whichever happens later.

PD = Data to be programmed at location PA. Data latches on the rising edge of WE# or CE#f pulse, whichever happens first.

SA = Address of the sector to be verified (in autoselect mode) or erased. Address bits A19–A12 uniquely select any sector.

BA = Address of the bank that is being switched to autoselect mode, is in bypass mode, or is being erased.

Notes:

1. *See Table 1 for description of bus operations.*
2. *All values are in hexadecimal.*
3. *Except for the read cycle and the fourth cycle of the autoselect command sequence, all bus cycles are write cycles.*
4. *Data bits DQ15–DQ8 are don't care in command sequences, except for RD and PD.*
5. *Unless otherwise noted, address bits A19–A11 are don't cares.*
6. *No unlock or command cycles required when bank is in read mode.*
7. *The Reset command is required to return to reading array data (or to the erase-suspend-read mode if previously in Erase Suspend) when a bank is in the autoselect mode, or if DQ5 goes high (while the bank is providing status information).*
8. *The fourth cycle of the autoselect command sequence is a read cycle. The system must provide the bank address to obtain the manufacturer ID, device ID, or SecSi Sector factory protect information. Data bits DQ15–DQ8 are don't care. See the Autoselect Command Sequence section for more information.*
9. *The data is 80h for factory locked and 00h for not factory locked.*
10. *The data is 00h for an unprotected sector/sector block and 01h for a protected sector/sector block.*
11. *The Unlock Bypass command is required prior to the Unlock Bypass Program command.*
12. *The Unlock Bypass Reset command is required to return to reading array data when the bank is in the unlock bypass mode.*
13. *The system may read and program in non-erasing sectors, or enter the autoselect mode, when in the Erase Suspend mode. The Erase Suspend command is valid only during a sector erase operation, and requires the bank address.*
14. *The Erase Resume command is valid only during the Erase Suspend mode, and requires the bank address.*
15. *Command is valid when device is ready to read array data or when device is in autoselect mode.*

Table 15. Autoselect Device ID Codes

Device	Autoselect Device ID
Am29DL161D	36h (T), 39h (B)
Am29DL162D	2Dh (T), 2Eh (B)
Am29DL163D	28h (T), 2Bh (B)
Am29DL164D	33h (T), 35h (B)

T = Top Boot Sector, B = Bottom Boot Sector

WRITE OPERATION STATUS

The device provides several bits to determine the status of a program or erase operation: DQ2, DQ3, DQ5, DQ6, and DQ7. Table 16 and the following subsections describe the function of these bits. DQ7 and DQ6 each offer a method for determining whether a program or erase operation is complete or in progress. The device also provides a hardware-based output signal, RY/BY#, to determine whether an Embedded Program or Erase operation is in progress or has been completed.

DQ7: Data# Polling

The Data# Polling bit, DQ7, indicates to the host system whether an Embedded Program or Erase algorithm is in progress or completed, or whether a bank is in Erase Suspend. Data# Polling is valid after the rising edge of the final WE# pulse in the command sequence.

During the Embedded Program algorithm, the device outputs on DQ7 the complement of the datum programmed to DQ7. This DQ7 status also applies to programming during Erase Suspend. When the Embedded Program algorithm is complete, the device outputs the datum programmed to DQ7. The system must provide the program address to read valid status information on DQ7. If a program address falls within a protected sector, Data# Polling on DQ7 is active for approximately 1 µs, then that bank returns to reading array data.

During the Embedded Erase algorithm, Data# Polling produces a “0” on DQ7. When the Embedded Erase algorithm is complete, or if the bank enters the Erase Suspend mode, Data# Polling produces a “1” on DQ7. The system must provide an address within any of the sectors selected for erasure to read valid status information on DQ7.

After an erase command sequence is written, if all sectors selected for erasing are protected, Data# Polling on DQ7 is active for approximately 100 µs, then the bank returns to reading array data. If not all selected sectors are protected, the Embedded Erase algorithm erases the unprotected sectors, and ignores the selected sectors that are protected. However, if the system reads DQ7 at an address within a protected sector, the status may not be valid.

Just prior to the completion of an Embedded Program or Erase operation, DQ7 may change asynchronously with DQ0–DQ6 while Output Enable (OE#) is asserted low. That is, the device may change from providing status information to valid data on DQ7. Depending on when the system samples the DQ7 output, it may read the status or valid data. Even if the device has completed the program or erase operation and DQ7 has valid data, the data outputs on DQ0–DQ6 may be still invalid. Valid data on DQ0–DQ7 will appear on successive read cycles.

Table 16 shows the outputs for Data# Polling on DQ7. Figure 5 shows the Data# Polling algorithm. Figure 22 in the AC Characteristics section shows the Data# Polling timing diagram.

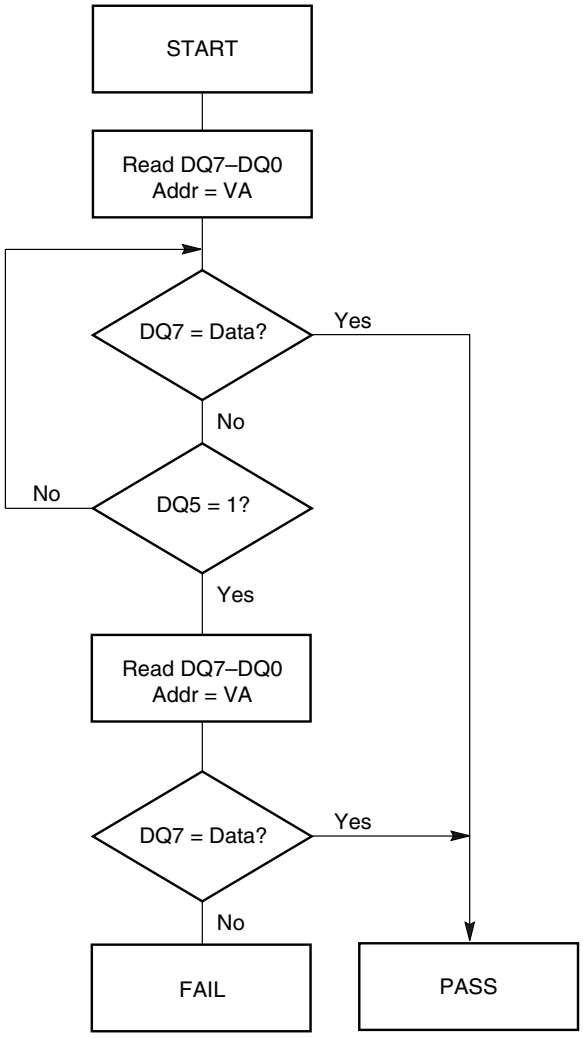

Notes:

1. *VA = Valid address for programming. During a sector erase operation, a valid address is any sector address within the sector being erased. During chip erase, a valid address is any non-protected sector address.*
2. *DQ7 should be rechecked even if DQ5 = “1” because DQ7 may change simultaneously with DQ5.*

Figure 5. Data# Polling Algorithm

RY/BY#: Ready/Busy#

The RY/BY# is a dedicated, open-drain output pin which indicates whether an Embedded Algorithm is in progress or complete. The RY/BY# status is valid after the rising edge of the final WE# pulse in the command sequence. Since RY/BY# is an open-drain output, several RY/BY# pins can be tied together in parallel with a pull-up resistor to V_{CC}.

If the output is low (Busy), the device is actively erasing or programming. (This includes programming in the Erase Suspend mode.) If the output is high (Ready), the device is reading array data, the standby mode, or one of the banks is in the erase-suspend-read mode.

Table 16 shows the outputs for RY/BY#.

DQ6: Toggle Bit I

Toggle Bit I on DQ6 indicates whether an Embedded Program or Erase algorithm is in progress or complete, or whether the device has entered the Erase Suspend mode. Toggle Bit I may be read at any address, and is valid after the rising edge of the final WE# pulse in the command sequence (prior to the program or erase operation), and during the sector erase time-out.

During an Embedded Program or Erase algorithm operation, successive read cycles to any address cause DQ6 to toggle. The system may use either OE# or CE#f to control the read cycles. When the operation is complete, DQ6 stops toggling.

After an erase command sequence is written, if all sectors selected for erasing are protected, DQ6 toggles for approximately 100 µs, then returns to reading array data. If not all selected sectors are protected, the Embedded Erase algorithm erases the unprotected sectors, and ignores the selected sectors that are protected.

The system can use DQ6 and DQ2 together to determine whether a sector is actively erasing or is erase-suspended. When the device is actively erasing (that is, the Embedded Erase algorithm is in progress), DQ6 toggles. When the device enters the Erase Suspend mode, DQ6 stops toggling. However, the system must also use DQ2 to determine which sectors are erasing or erase-suspended. Alternatively, the system can use DQ7 (see the subsection on DQ7: Data# Polling).

If a program address falls within a protected sector, DQ6 toggles for approximately 1 µs after the program command sequence is written, then returns to reading array data.

DQ6 also toggles during the erase-suspend-program mode, and stops toggling once the Embedded Program algorithm is complete.

Table 16 shows the outputs for Toggle Bit I on DQ6. Figure 6 shows the toggle bit algorithm. Figure 23 in the “AC Characteristics” section shows the toggle bit timing diagrams. Figure 24 shows the differences between DQ2 and DQ6 in graphical form. See also the subsection on DQ2: Toggle Bit II.

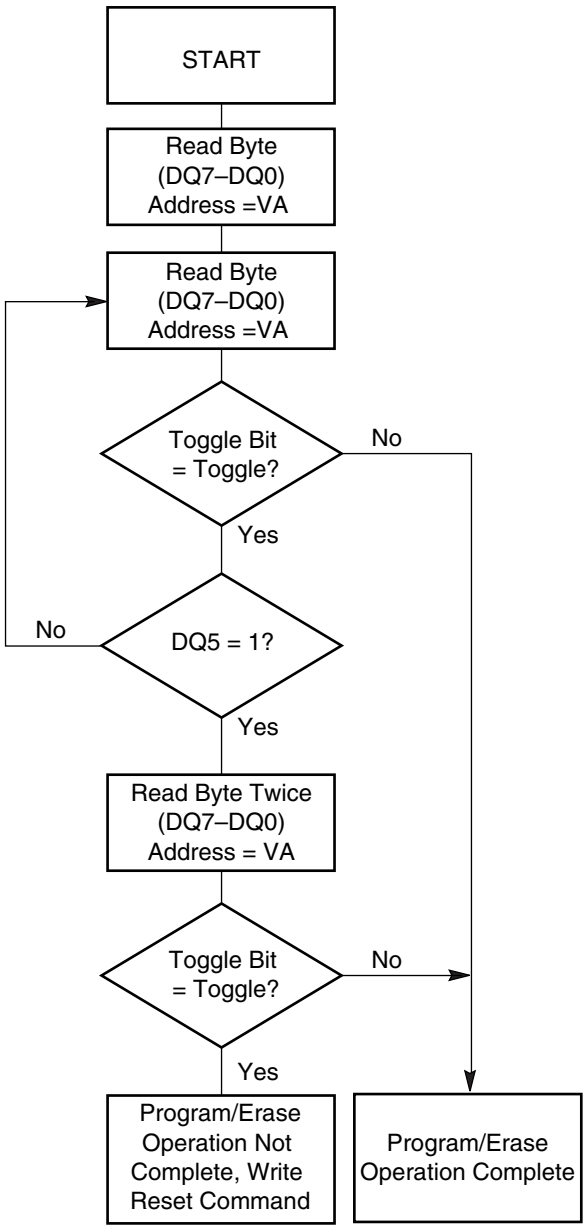

Note: *The system should recheck the toggle bit even if DQ5 = “1” because the toggle bit may stop toggling as DQ5 changes to “1.” See the subsections on DQ6 and DQ2 for more information.*

Figure 6. Toggle Bit Algorithm

DQ2: Toggle Bit II

The “Toggle Bit II” on DQ2, when used with DQ6, indicates whether a particular sector is actively erasing (that is, the Embedded Erase algorithm is in progress), or whether that sector is erase-suspended. Toggle Bit II is valid after the rising edge of the final WE# pulse in the command sequence.

DQ2 toggles when the system reads at addresses within those sectors that have been selected for erasure. (The system may use either OE# or CE#f to control the read cycles.) But DQ2 cannot distinguish whether the sector is actively erasing or is erase-suspended. DQ6, by comparison, indicates whether the device is actively erasing, or is in Erase Suspend, but cannot distinguish which sectors are selected for erasure. Thus, both status bits are required for sector and mode information. Refer to Table 16 to compare outputs for DQ2 and DQ6.

Figure 6 shows the toggle bit algorithm in flowchart form, and the section “DQ2: Toggle Bit II” explains the algorithm. See also the DQ6: Toggle Bit I subsection. Figure 23 shows the toggle bit timing diagram. Figure 24 shows the differences between DQ2 and DQ6 in graphical form.

Reading Toggle Bits DQ6/DQ2

Refer to Figure 6 for the following discussion. Whenever the system initially begins reading toggle bit status, it must read DQ7–DQ0 at least twice in a row to determine whether a toggle bit is toggling. Typically, the system would note and store the value of the toggle bit after the first read. After the second read, the system would compare the new value of the toggle bit with the first. If the toggle bit is not toggling, the device has completed the program or erase operation. The system can read array data on DQ7–DQ0 on the following read cycle.

However, if after the initial two read cycles, the system determines that the toggle bit is still toggling, the system also should note whether the value of DQ5 is high (see the section on DQ5). If it is, the system should then determine again whether the toggle bit is toggling, since the toggle bit may have stopped toggling just as DQ5 went high. If the toggle bit is no longer toggling, the device has successfully completed the program or erase operation. If it is still toggling, the device did not completed the operation successfully, and the system must write the reset command to return to reading array data.

The remaining scenario is that the system initially determines that the toggle bit is toggling and DQ5 has not gone high. The system may continue to monitor the toggle bit and DQ5 through successive read cycles, determining the status as described in the previous paragraph. Alternatively, it may choose to perform other system tasks. In this case, the system must start at the beginning of the algorithm when it returns to determine the status of the operation (top of Figure 6).

DQ5: Exceeded Timing Limits

DQ5 indicates whether the program or erase time has exceeded a specified internal pulse count limit. Under these conditions DQ5 produces a “1,” indicating that the program or erase cycle was not successfully completed.

The device may output a “1” on DQ5 if the system tries to program a “1” to a location that was previously programmed to “0.” **Only an erase operation can change a “0” back to a “1.”** Under this condition, the device halts the operation, and when the timing limit has been exceeded, DQ5 produces a “1.”

Under both these conditions, the system must write the reset command to return to reading array data (or to the erase-suspend-read mode if a bank was previously in the erase-suspend-program mode).

DQ3: Sector Erase Timer

After writing a sector erase command sequence, the system may read DQ3 to determine whether or not erasure has begun. (The sector erase timer does not apply to the chip erase command.) If additional sectors are selected for erasure, the entire time-out also applies after each additional sector erase command. When the time-out period is complete, DQ3 switches from a “0” to a “1.” If the time between additional sector erase commands from the system can be assumed to be less than 50 µs, the system need not monitor DQ3. See also the Sector Erase Command Sequence section.

After the sector erase command is written, the system should read the status of DQ7 (Data# Polling) or DQ6 (Toggle Bit I) to ensure that the device has accepted the command sequence, and then read DQ3. If DQ3 is “1,” the Embedded Erase algorithm has begun; all further commands (except Erase Suspend) are ignored until the erase operation is complete. If DQ3 is “0,” the device will accept additional sector erase commands. To ensure the command has been accepted, the system software should check the status of DQ3 prior to and following each subsequent sector erase command. If DQ3 is high on the second status check, the last command might not have been accepted.

Table 16 shows the status of DQ3 relative to the other status bits.

Table 16. Write Operation Status

Status			DQ7 (Note 2)	DQ6	DQ5 (Note 1)	DQ3	DQ2 (Note 2)	RY/BY#
Standard Mode	Embedded Program Algorithm		DQ7#	Toggle	0	N/A	No toggle	0
	Embedded Erase Algorithm		0	Toggle	0	1	Toggle	0
Erase Suspend Mode	Erase-Suspend-Read	Erase Suspended Sector	1	No toggle	0	N/A	Toggle	1
		Non-Erase Suspended Sector	Data	Data	Data	Data	Data	1
	Erase-Suspend-Program		DQ7#	Toggle	0	N/A	N/A	0

Notes:

1. *DQ5 switches to '1' when an Embedded Program or Embedded Erase operation has exceeded the maximum timing limits. Refer to the section on DQ5 for more information.*
2. *DQ7 and DQ2 require a valid address when reading status information. Refer to the appropriate subsection for further details.*
3. *When reading write operation status bits, the system must always provide the bank address where the Embedded Algorithm is in progress. The device outputs array data if the system addresses a non-busy bank.*

ABSOLUTE MAXIMUM RATINGS

Storage Temperature
Plastic Packages . . . . . –55°C to +125°C

Ambient Temperature
with Power Applied. . . . . –40°C to +85°C

Voltage with Respect to Ground

V_{CC}f/V_{CC}s (Note 1) . . . . . –0.3 V to +4.0 V

OE# and RESET#
(Note 2). . . . . –0.5 V to +12.5 V

WP#/ACC . . . . . –0.5 V to +10.5 V

All other pins (Note 1) . . . . . –0.5 V to V_{CC} +0.5 V

Output Short Circuit Current (Note 3) . . . . . 200 mA

Notes:

1. *Minimum DC voltage on input or I/O pins is –0.5 V. During voltage transitions, input or I/O pins may overshoot V_{SS} to –2.0 V for periods of up to 20 ns. Maximum DC voltage on input or I/O pins is V_{CC} +0.5 V. See Figure 7. During voltage transitions, input or I/O pins may overshoot to V_{CC} +2.0 V for periods up to 20 ns. See Figure 8.*
2. *Minimum DC input voltage on pins OE#, RESET#, and WP#/ACC is –0.5 V. During voltage transitions, OE#, WP#/ACC, and RESET# may overshoot V_{SS} to –2.0 V for periods of up to 20 ns. See Figure 7. Maximum DC input voltage on pin RESET# is +12.5 V which may overshoot to +14.0 V for periods up to 20 ns. Maximum DC input voltage on WP#/ACC is +9.5 V which may overshoot to +12.0 V for periods up to 20 ns.*
3. *No more than one output may be shorted to ground at a time. Duration of the short circuit should not be greater than one second.*

Stresses above those listed under "Absolute Maximum Ratings" may cause permanent damage to the device. This is a stress rating only; functional operation of the device at these or any other conditions above those indicated in the operational sections of this data sheet is not implied. Exposure of the device to absolute maximum rating conditions for extended periods may affect device reliability.

OPERATING RANGES

Industrial (I) Devices

Ambient Temperature (T_A). . . . . .–40°C to +85°C

V_{CC}f/V_{CC}s Supply Voltage

V_{CC}f/V_{CC}s for standard voltage range . . 2.7 V to 3.3 V

Operating ranges define those limits between which the functionality of the device is guaranteed.

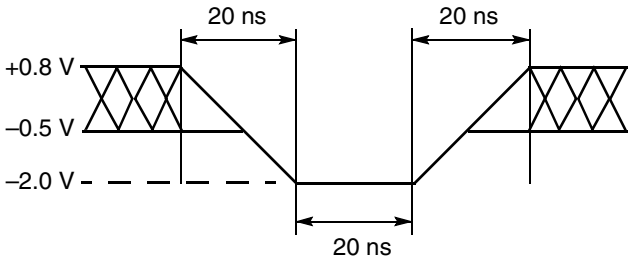

Figure 7. Maximum Negative Overshoot Waveform

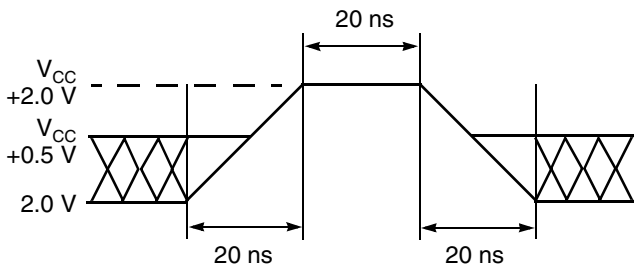

Figure 8. Maximum Positive Overshoot Waveform

DC CHARACTERISTICS

CMOS Compatible

Parameter Symbol	Parameter Description	Test Conditions		Min	Typ	Max	Unit
I_{LI}	Input Load Current	$V_{IN} = V_{SS}$ to V_{CC}, $V_{CC} = V_{CC\ max}$				±1.0	µA
I_{LIT}	RESET# Input Load Current	$V_{CC} = V_{CC\ max}$; RESET# = 12.5 V				35	µA
I_{LO}	Output Leakage Current	$V_{OUT} = V_{SS}$ to V_{CC}, $V_{CC} = V_{CC\ max}$				±1.0	µA
I_{LIA}	ACC Input Leakage Current	$V_{CC} = V_{CC\ max}$, WP#/ACC = $V_{ACC\ max}$				35	µA
$I_{CC1}f$	Flash V_{CC} Active Read Current (Notes 1, 2)	CE#f = V_{IL}, OE# = V_{IH}, Word Mode	5 MHz		10	16	mA
			1 MHz		2	4	
$I_{CC2}f$	Flash V_{CC} Active Write Current (Notes 2, 3)	CE#f = V_{IL}, OE# = V_{IH}, WE# = V_{IL}			15	30	mA
$I_{CC3}f$	Flash V_{CC} Standby Current (Note 2)	$V_{CC}f = V_{CC\ max}$, CE#f, RESET#, WP#/ACC = $V_{CC}f \pm 0.3$ V			0.2	5	µA
$I_{CC4}f$	Flash V_{CC} Reset Current (Note 2)	$V_{CC}f = V_{CC\ max}$, RESET# = $V_{SS} \pm 0.3$ V, WP#/ACC = $V_{CC}f \pm 0.3$ V			0.2	5	µA
$I_{CC5}f$	Flash V_{CC} Current Automatic Sleep Mode (Notes 2, 4)	$V_{CC}f = V_{CC\ max}$, $V_{IH} = V_{CC} \pm 0.3$ V; $V_{IL} = V_{SS} \pm 0.3$ V			0.2	5	µA
$I_{CC6}f$	Flash V_{CC} Active Read-While-Program Current (Notes 1, 2)	CE#f = V_{IL}, OE# = V_{IH}			21	45	mA
$I_{CC7}f$	Flash V_{CC} Active Read-While-Erase Current (Notes 1, 2)	CE#f = V_{IL}, OE# = V_{IH}			21	45	mA
$I_{CC8}f$	Flash V_{CC} Active Program-While-Erase-Suspended Current (Notes 2, 5)	CE#f = V_{IL}, OE#f = V_{IH}			17	35	mA
I_{ACC}	ACC Accelerated Program Current	CE#f = V_{IL}, OE# = V_{IH}	ACC pin		5	10	mA
			V_{CC} pin		15	30	mA
$I_{CC4}s$	SRAM V_{CC} Standby Current	CE1#s ≥ $V_{CC}s$ – 0.2V, CE2s ≥ $V_{CC}s$ – 0.2V				10	µA
$I_{CC5}s$	SRAM V_{CC} Standby Current	CE2s ≤ 0.2V				10	µA
V_{IL}	Input Low Voltage			–0.2		0.8	V
V_{IH}	Input High Voltage			2.4		V_{CC} + 0.2	V
V_{HH}	Voltage for WP#/ACC Program Acceleration and Sector Protection/Unprotection			8.5		9.5	V
V_{ID}	Voltage for Sector Protection, Autoselect and Temporary Sector Unprotect			8.5		12.5	V
V_{OL}	Output Low Voltage	I_{OL} = 4.0 mA, $V_{CC}f = V_{CC}s = V_{CC\ min}$				0.45	V
V_{OH1}	Output High Voltage	I_{OH} = –2.0 mA, $V_{CC}f = V_{CC}s = V_{CC\ min}$		0.85 x V_{CC}			V
V_{OH2}		I_{OH} = –100 µA, $V_{CC} = V_{CC\ min}$		V_{CC}–0.4			

DC CHARACTERISTICS (Continued)

CMOS Compatible

Parameter Symbol	Parameter Description	Test Conditions	Min	Typ	Max	Unit
V_{LKO}	Flash Low V_{CC} Lock-Out Voltage (Note 5)		2.3		2.5	V

Notes:

1. *The I_{CC} current listed is typically less than 2 mA/MHz, with OE# at V_{IH}.*
2. *Maximum I_{CC} specifications are tested with $V_{CC} = V_{CC}$max.*
3. *I_{CC} active while Embedded Erase or Embedded Program is in progress.*
4. *Automatic sleep mode enables the low power mode when addresses remain stable for t_{ACC} + 30 ns. Typical sleep mode current is 200 nA.*
5. *Not 100% tested.*

SRAM DC AND OPERATING CHARACTERISTICS

Parameter Symbol	Parameter Description	Test Conditions	Min	Typ	Max	Unit
I_{LI}	Input Leakage Current	$V_{IN} = V_{SS}$ to V_{CC}	–1.0		1.0	µA
I_{LO}	Output Leakage Current	CE1#s = V_{IH}, CE2s = V_{IL} or OE# = V_{IH} or WE# = V_{IL}, V_{IO}= V_{SS} to V_{CC}	–1.0		1.0	µA
I_{CC1}s	Average Operating Current	Cycle time = 1 µs, 100% duty, I_{IO} = 0 mA, CE1#s ≤ 0.2 V, CE2 ≥ V_{CC} – 0.2 V, V_{IN} ≤ 0.2 V or V_{IN} ≥ V_{CC} – 0.2 V			2	mA
I_{CC2}s	Average Operating Current	Cycle time = Min., I_{IO} = 0 mA, 100% duty, CE1#s = V_{IL}, CE2s = V_{IH}, V_{IN} = V_{IL} = or V_{IH}			20	mA
V_{OL}	Output Low Voltage	I_{OL} = 2.1 mA			0.4	V
V_{OH}	Output High Voltage	I_{OH} = –1.0 mA	2.4			V
I_{SB1}	Standby Current (CMOS)	CE1#s ≥ V_{CC} – 0.2 V, CE2 ≥ V_{CC} – 0.2 V (CE1#s controlled) or 0 V ≤ CE2 ≤ 0.2 V (CE2s controlled), CIOs = V_{SS} or V_{CC}, Other input = 0 ~ V_{CC}			10	µA

DC CHARACTERISTICS

Zero-Power Flash

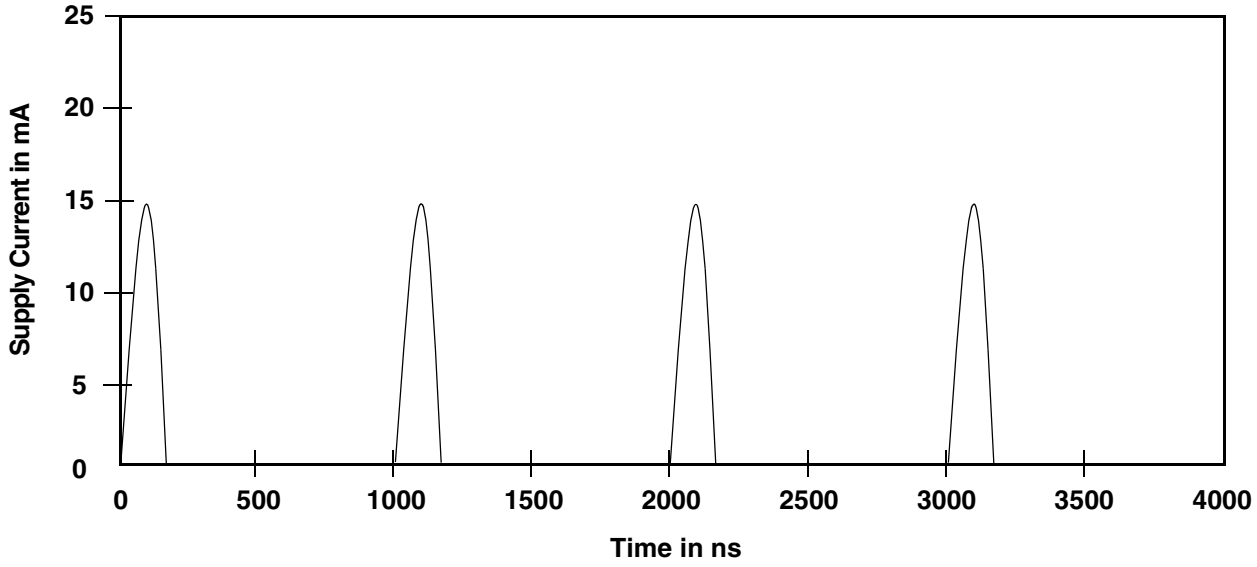

Note: *Addresses are switching at 1 MHz*

Figure 9. I_{CC1} Current vs. Time (Showing Active and Automatic Sleep Currents)

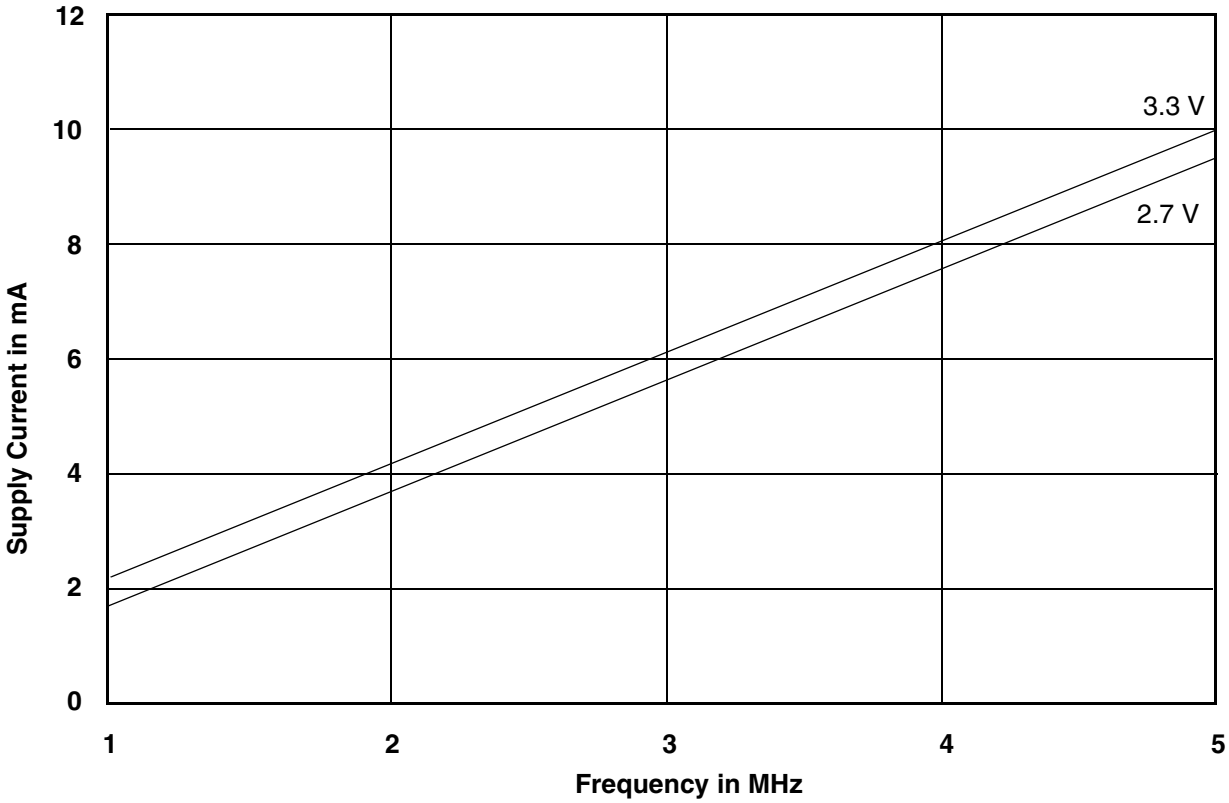

Note: *T = 25 °C*

Figure 10. Typical I_{CC1} vs. Frequency

TEST CONDITIONS

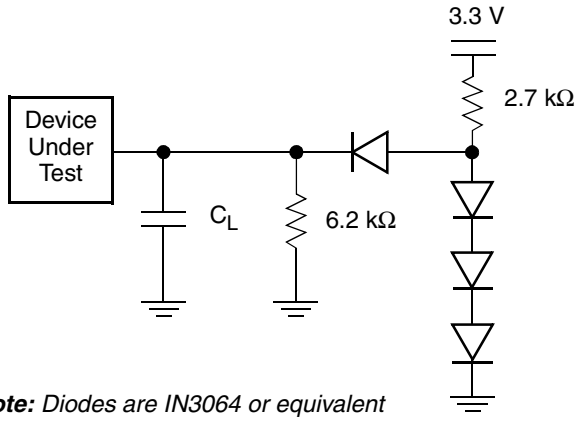

Note: *Diodes are IN3064 or equivalent*

Figure 11. Test Setup

Table 17. Test Specifications

Test Condition	70, 85 ns	Unit
Output Load	1 TTL gate	
Output Load Capacitance, C_L (including jig capacitance)	30	pF
Input Rise and Fall Times	5	ns
Input Pulse Levels	0.0–3.0	V
Input timing measurement reference levels	1.5	V
Output timing measurement reference levels	1.5	V

KEY TO SWITCHING WAVEFORMS

WAVEFORM	INPUTS	OUTPUTS
	Steady	
	Changing from H to L	
	Changing from L to H	
	Don't Care, Any Change Permitted	Changing, State Unknown
	Does Not Apply	Center Line is High Impedance State (High Z)

KS000010-PAL

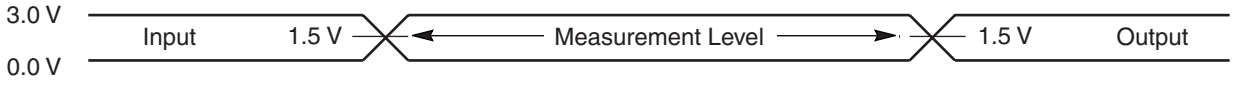

Figure 12. Input Waveforms and Measurement Levels

AC CHARACTERISTICS

SRAM CE#s Timing

Parameter		Description	Test Setup		All Speed Options	Unit
JEDEC	Std					
—	t_{CCR}	CE#s Recover Time	—	Min	0	ns

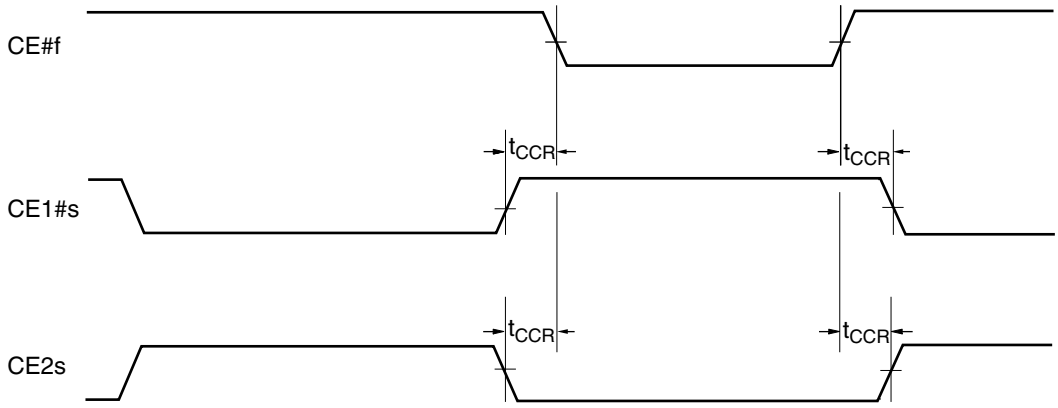

Figure 13. Timing Diagram for Alternating Between SRAM to Flash

AC CHARACTERISTICS

Flash Read-Only Operations

Parameter		Description		Test Setup		Speed Options		Unit
JEDEC	Std					70	85	
t_{AVAV}	t_{RC}	Read Cycle Time (Note 1)			Min	70	85	ns
t_{AVQV}	t_{ACC}	Address to Output Delay		CE#f, OE# = V_{IL}	Max	70	85	ns
t_{ELQV}	t_{CE}	Chip Enable to Output Delay		OE# = V_{IL}	Max	70	85	ns
t_{GLQV}	t_{OE}	Output Enable to Output Delay			Max	30	35	ns
t_{EHQZ}	t_{DF}	Chip Enable to Output High Z (Note 1)			Max	16		ns
t_{GHQZ}	t_{DF}	Output Enable to Output High Z (Note 1)			Max	16		ns
t_{AXQX}	t_{OH}	Output Hold Time From Addresses, CE#f or OE#, Whichever Occurs First			Min	0		ns
	t_{OEH}	Output Enable Hold Time (Note 1)	Read		Min	0		ns
			Toggle and Data# Polling		Min	10		ns

Notes:

1. *Not 100% tested.*
2. *See Figure 11 and Table 17 for test specifications.*

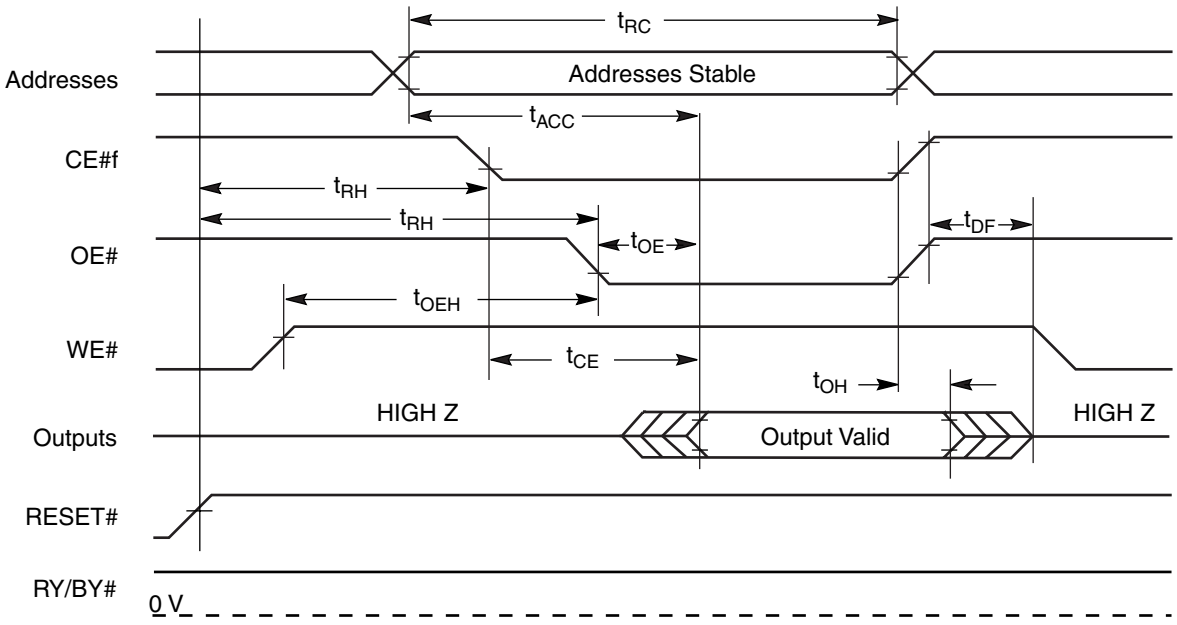

Figure 14. Read Operation Timings

AC CHARACTERISTICS

Hardware Reset (RESET#)

Parameter		Description		All Speed Options	Unit
JEDEC	Std				
	t_{Ready}	RESET# Pin Low (During Embedded Algorithms) to Read Mode (See Note)	Max	20	µs
	t_{Ready}	RESET# Pin Low (NOT During Embedded Algorithms) to Read Mode (See Note)	Max	500	ns
	t_{RP}	RESET# Pulse Width	Min	500	ns
	t_{RH}	Reset High Time Before Read (See Note)	Min	50	ns
	t_{RPD}	RESET# Low to Standby Mode	Min	20	µs
	t_{RB}	RY/BY# Recovery Time	Min	0	ns

Note: *Not 100% tested.*

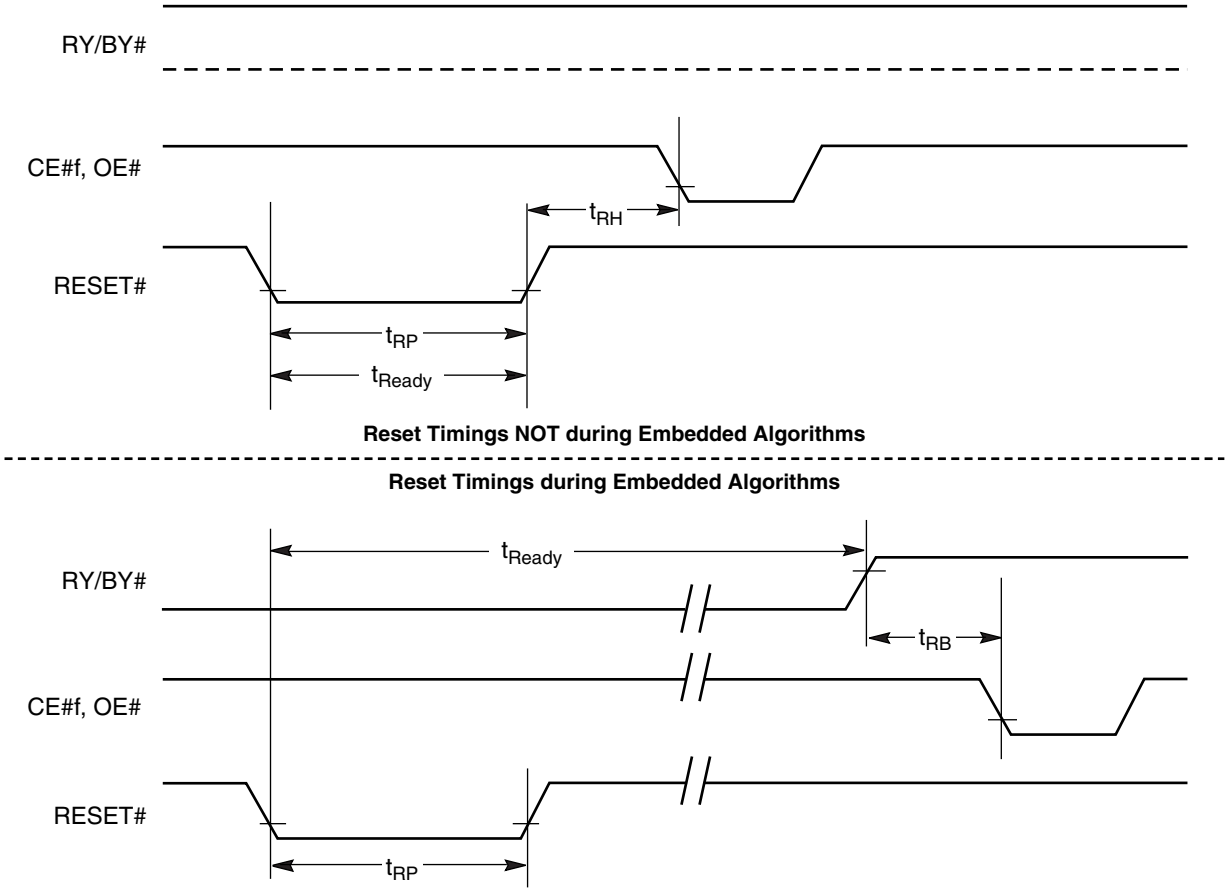

Figure 15. Reset Timings

AC CHARACTERISTICS

Flash Word/Byte Configuration (CIOf)

Parameter		Description		Speed Options		Unit
JEDEC	Std			70	85	
	t_{ELFL}/t_{ELFH}	CE#f to CIOf Switching Low or High	Max	5		ns
	t_{FLQZ}	CIOf Switching Low to Output HIGH Z	Max	25	30	ns
	t_{FHQV}	CIOf Switching High to Output Active	Min	70	85	ns

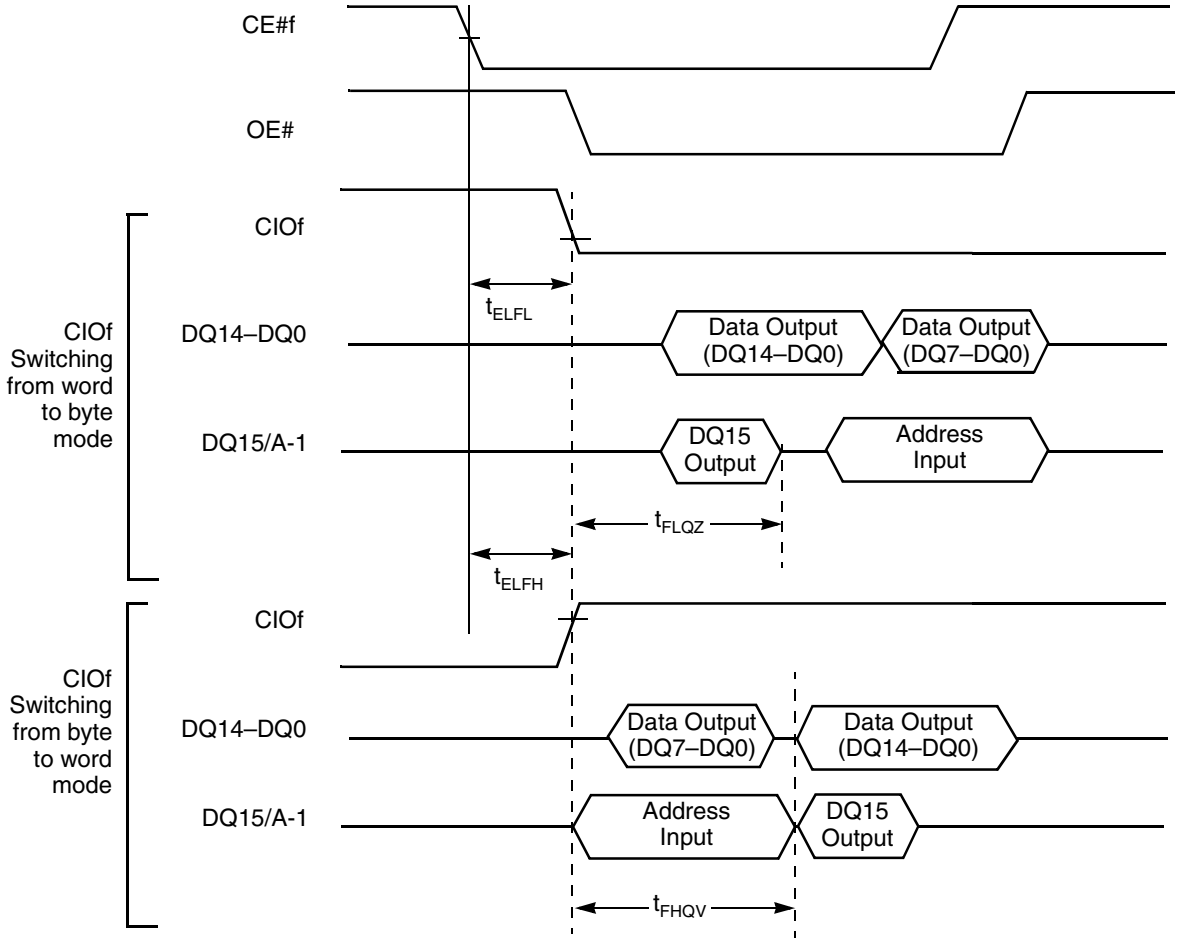

Figure 16. CIOf Timings for Read Operations

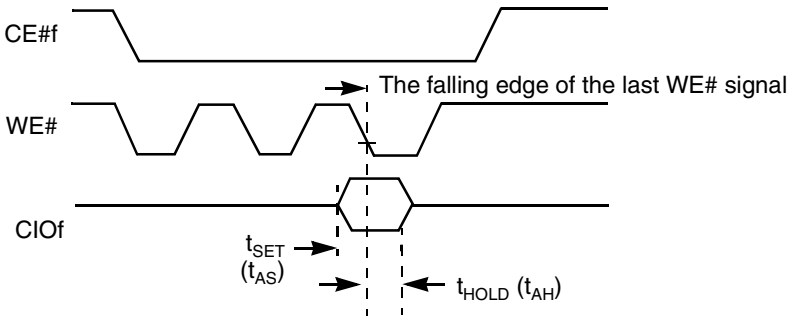

Note: *Refer to the Erase/Program Operations table for t_{AS} and t_{AH} specifications.*

Figure 17. CIOf Timings for Write Operations

AC CHARACTERISTICS

Flash Erase and Program Operations

Parameter					Speed Options		Unit
JEDEC	Std	Description		Min	70	85	
t_{AVAV}	t_{WC}	Write Cycle Time (Note 1)		Min	70	85	ns
t_{AVWL}	t_{AS}	Address Setup Time (WE# to Address)		Min	0		ns
	t_{ASO}	Address Setup Time to OE# or CE#f low during toggle bit polling		Min	15		ns
t_{WLAX}	t_{AH}	Address Hold Time (WE# to Address)		Min	45		ns
	t_{AHT}	Address Hold Time From CE#f or OE# high during toggle bit polling		Min	0		ns
t_{DVWH}	t_{DS}	Data Setup Time		Min	35		ns
t_{WHDX}	t_{DH}	Data Hold Time		Min	0		ns
	t_{OEH}	OE# Hold Time	Read	Min	0		ns
			Toggle and Data# Polling	Min	10		ns
	t_{OEPH}	Output Enable High during toggle bit polling		Min	20		ns
t_{GHEL}	t_{GHEL}	Read Recovery Time Before Write (OE# High to CE#f Low)		Min	0		ns
t_{GHWL}	t_{GHWL}	Read Recovery Time Before Write (OE# High to WE# Low)		Min	0		ns
t_{WLEL}	t_{WS}	WE# Setup Time (CE#f to WE#)		Min	0		ns
t_{ELWL}	t_{CS}	CE#f Setup Time (WE# to CE#f)		Min	0		ns
t_{EHWH}	t_{WH}	WE# Hold Time (CE#f to WE#)		Min	0		ns
t_{WHEH}	t_{CH}	CE#f Hold Time (CE#f to WE#)		Min	0		ns
t_{WLWH}	t_{WP}	Write Pulse Width		Min	30	35	ns
t_{ELEH}	t_{CP}	CE#f Pulse Width		Min	30	35	ns
t_{WHDL}	t_{WPH}	Write Pulse Width High		Min	0		ns
	$t_{SR/W}$	Latency Between Read and Write Operations		Min	0		ns
t_{WHWH1}	t_{WHWH1}	Programming Operation (Note 2)		Typ	7		µs
t_{WHWH1}	t_{WHWH1}	Accelerated Programming Operation (Note 2)		Typ	4		µs
t_{WHWH2}	t_{WHWH2}	Sector Erase Operation (Note 2)		Typ	0.7		sec
	t_{VCS}	V_{CC}f Setup Time (Note 1)		Min	50		µs
	t_{RB}	Write Recovery Time from RY/BY#		Min	0		ns
	t_{BUSY}	Program/Erase Valid to RY/BY# Delay		Max	90		ns

Notes:

1. *Not 100% tested.*
2. *See the "Flash Erase And Programming Performance" section for more information.*

AC CHARACTERISTICS

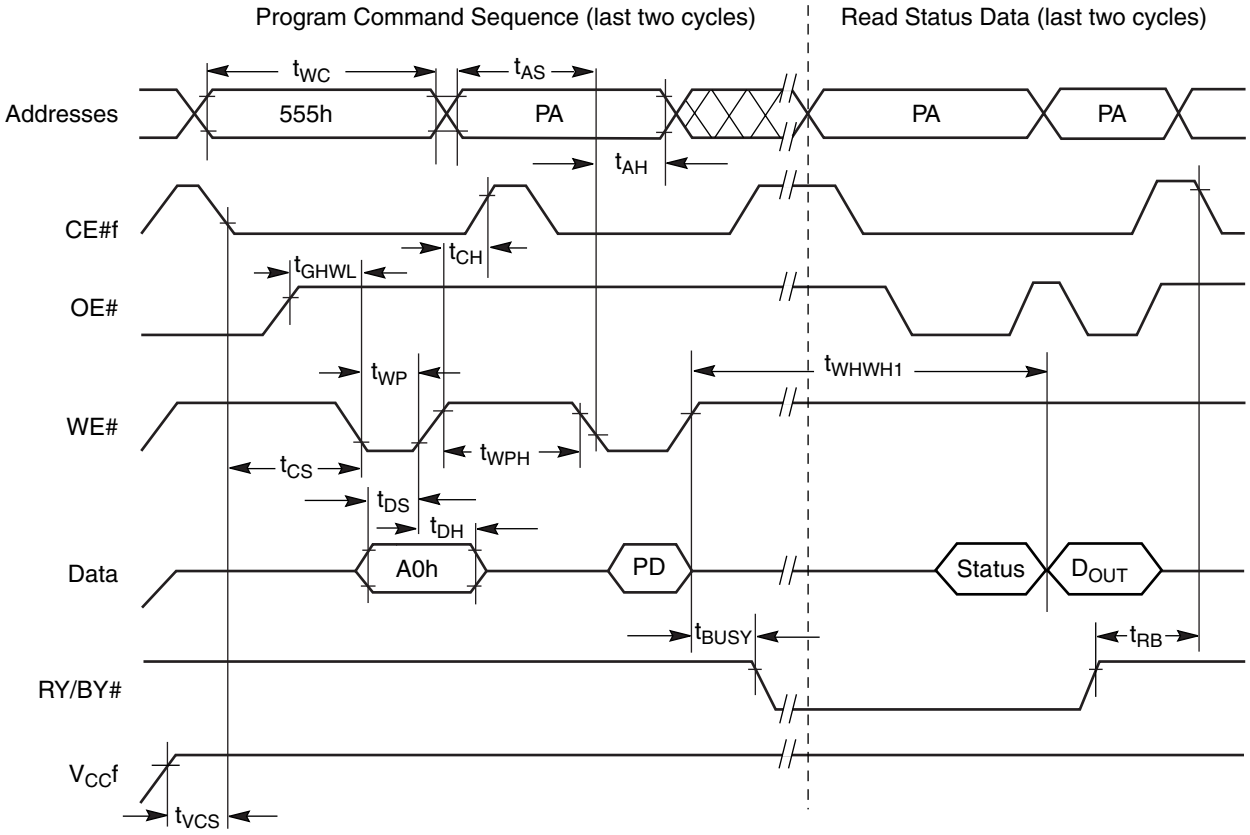

Notes:

1. *PA = program address, PD = program data, D_{OUT} is the true data at the program address.*
2. *Illustration shows device in word mode.*

Figure 18. Program Operation Timings

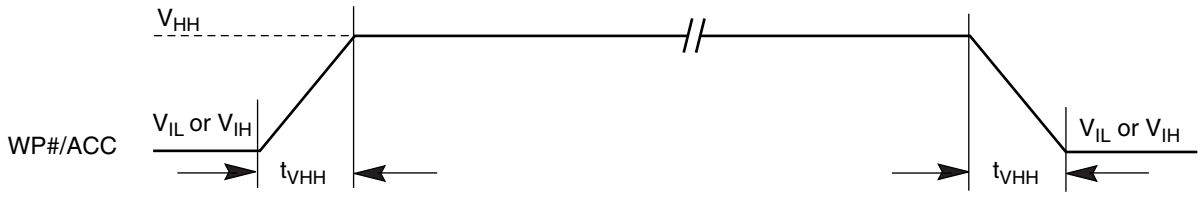

Figure 19. Accelerated Program Timing Diagram

AC CHARACTERISTICS

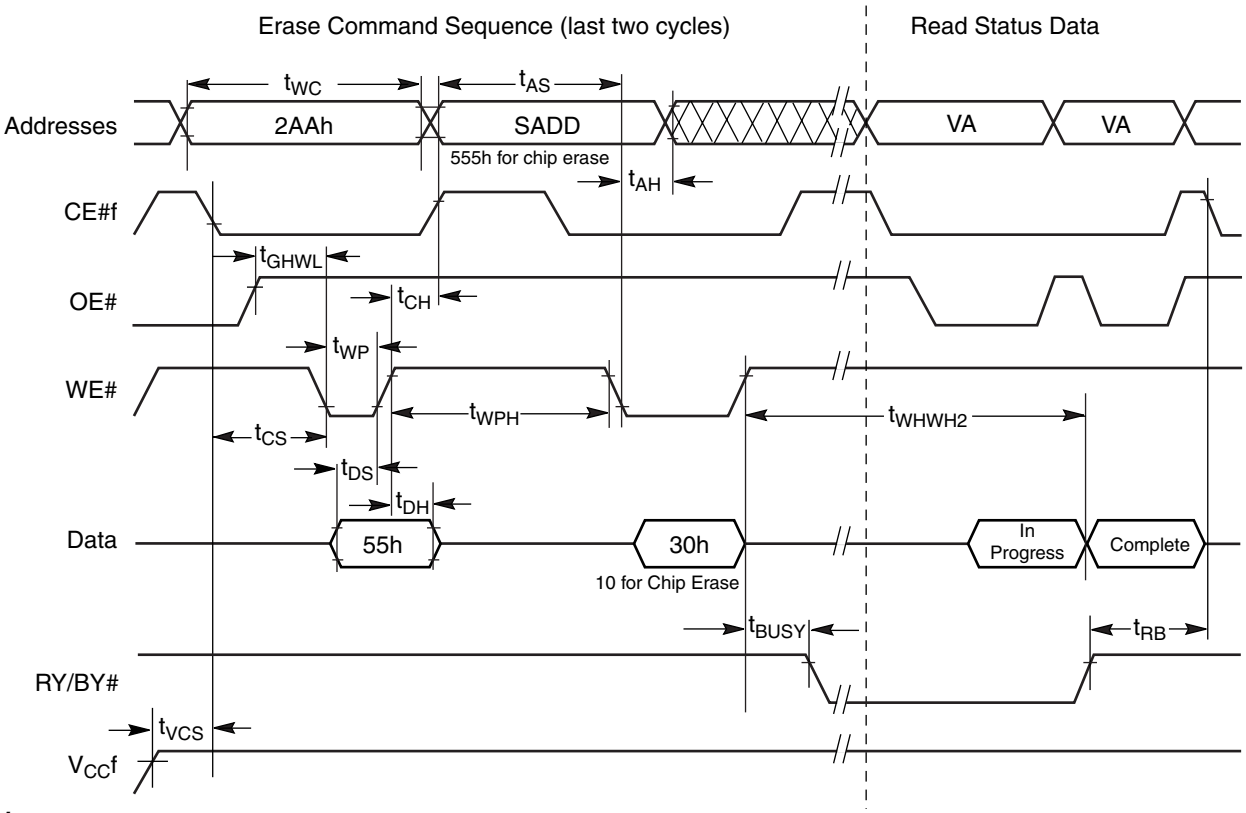

Notes:

1. *SA = sector address (for Sector Erase), VA = Valid Address for reading status data (see "Write Operation Status").*
2. *These waveforms are for the word mode.*

Figure 20. Chip/Sector Erase Operation Timings

AC CHARACTERISTICS

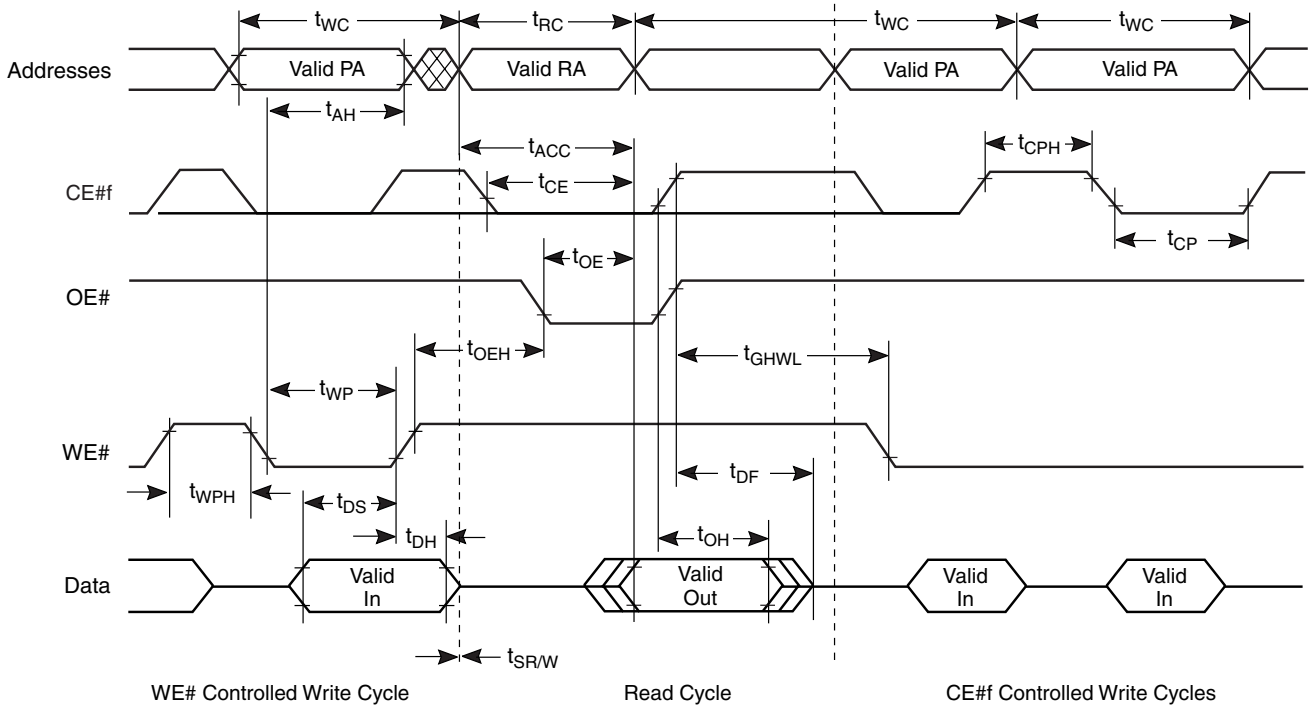

Figure 21. Back-to-back Read/Write Cycle Timings

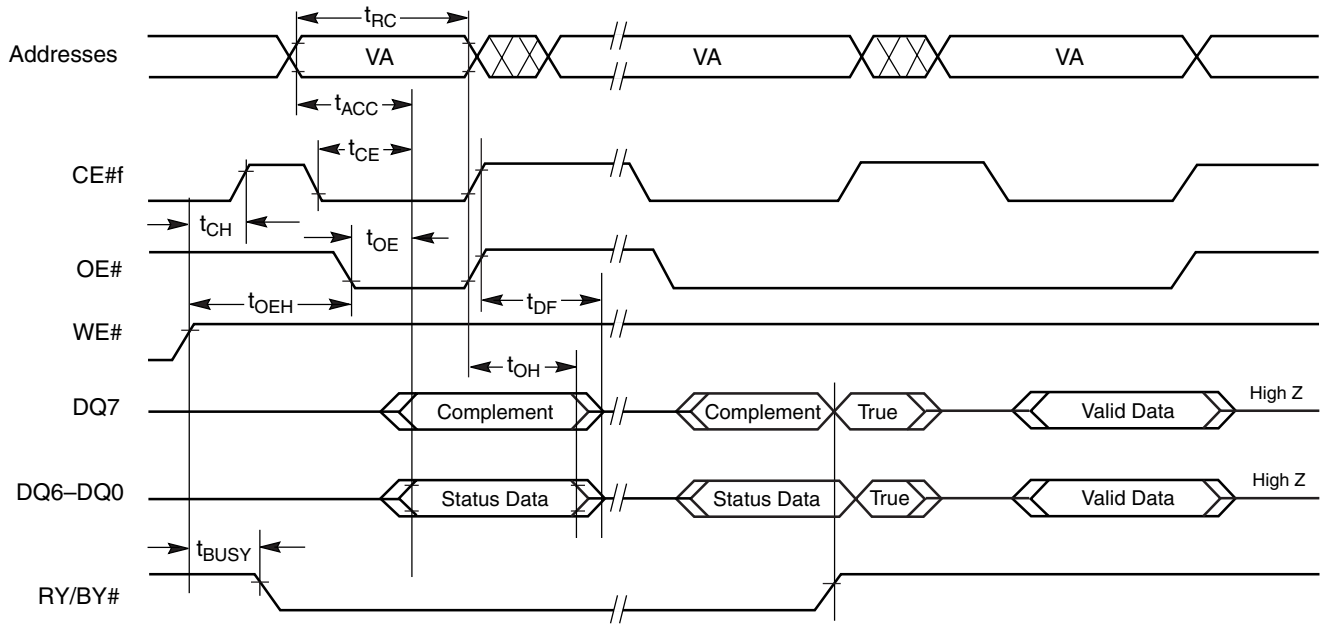

Note: *VA = Valid address. Illustration shows first status cycle after command sequence, last status read cycle, and array data read cycle.*

Figure 22. Data# Polling Timings (During Embedded Algorithms)

AC CHARACTERISTICS

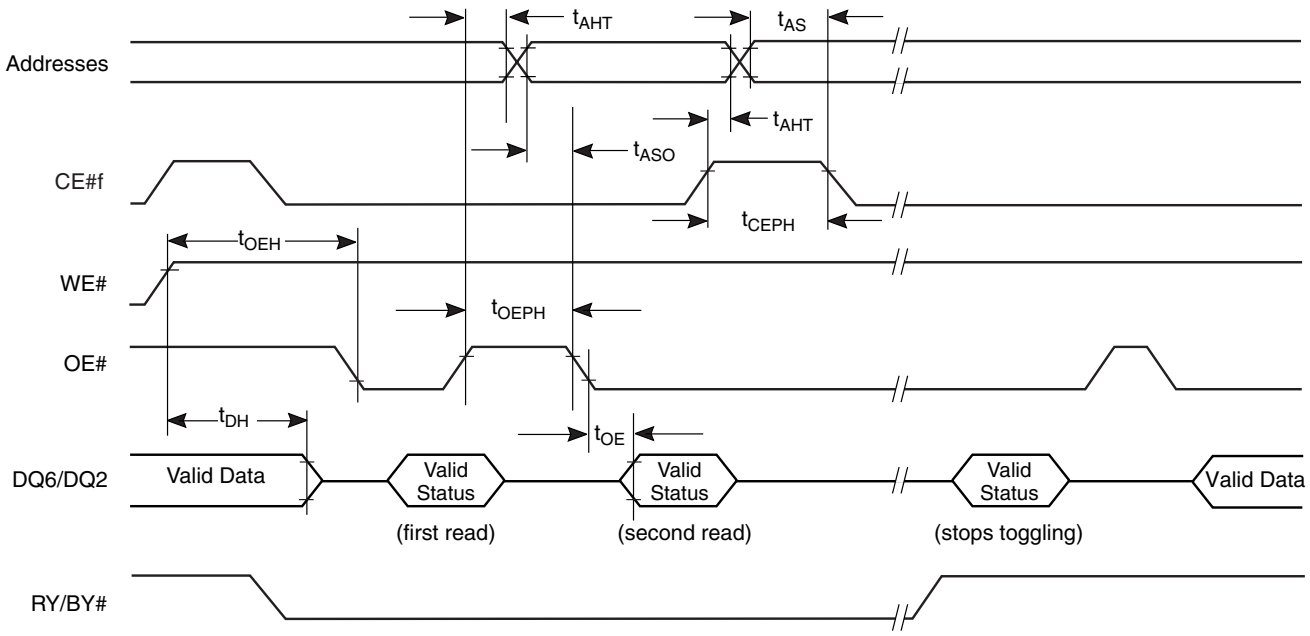

Note: *VA = Valid address; not required for DQ6. Illustration shows first two status cycle after command sequence, last status read cycle, and array data read cycle*

Figure 23. Toggle Bit Timings (During Embedded Algorithms)

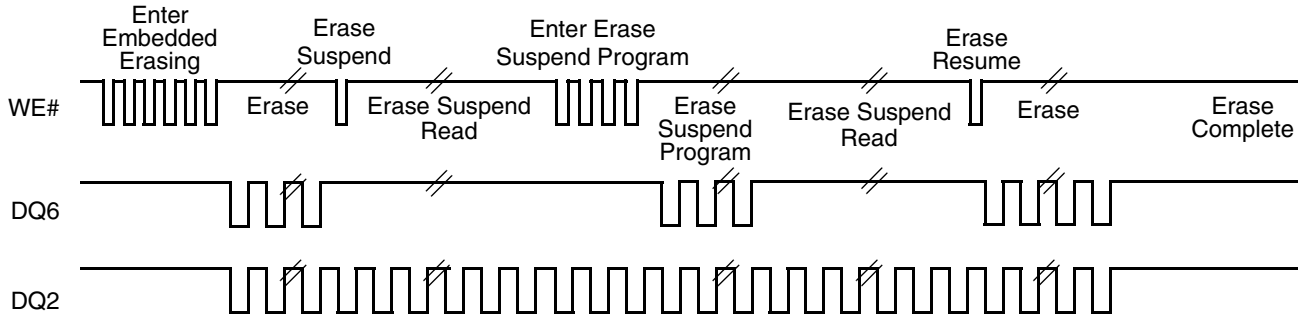

Note: *DQ2 toggles only when read at an address within an erase-suspended sector. The system may use OE# or CE#f to toggle DQ2 and DQ6.*

Figure 24. DQ2 vs. DQ6

AC CHARACTERISTICS

Temporary Sector/Sector Block Unprotect

Parameter		Description		All Speed Options	Unit
JEDEC	Std				
	t_{VIDR}	V_{ID} Rise and Fall Time (See Note)	Min	500	ns
	t_{VHH}	V_{HH} Rise and Fall Time (See Note)	Min	250	ns
	t_{RSP}	RESET# Setup Time for Temporary Sector/Sector Block Unprotect	Min	4	µs
	t_{RRB}	RESET# Hold Time from RY/BY# High for Temporary Sector/Sector Block Unprotect	Min	4	µs

Note: *Not 100% tested.*

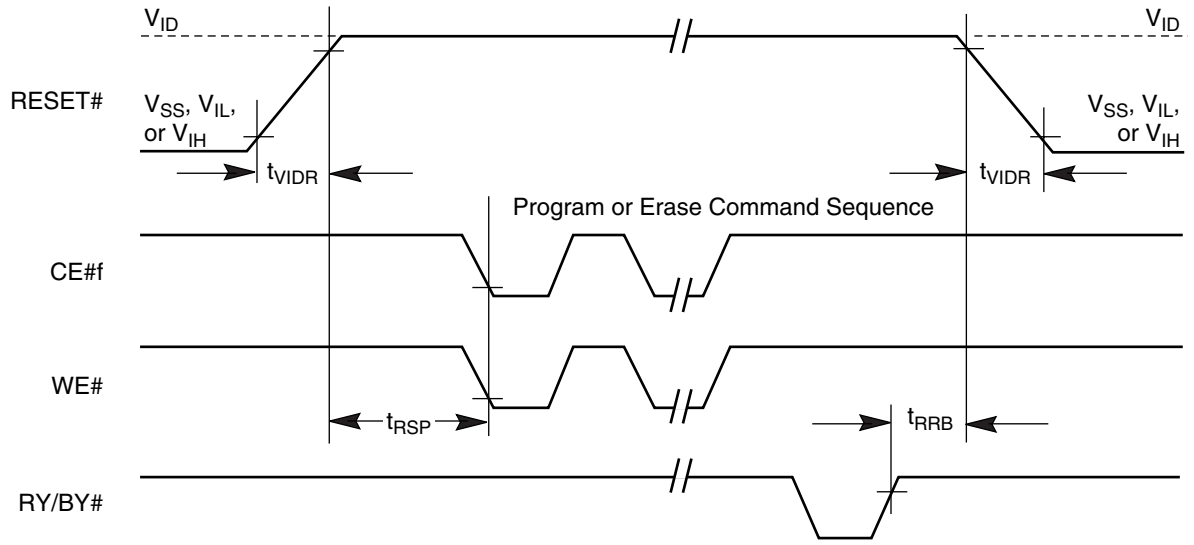

Figure 25. Temporary Sector/Sector Block Unprotect Timing Diagram

AC CHARACTERISTICS

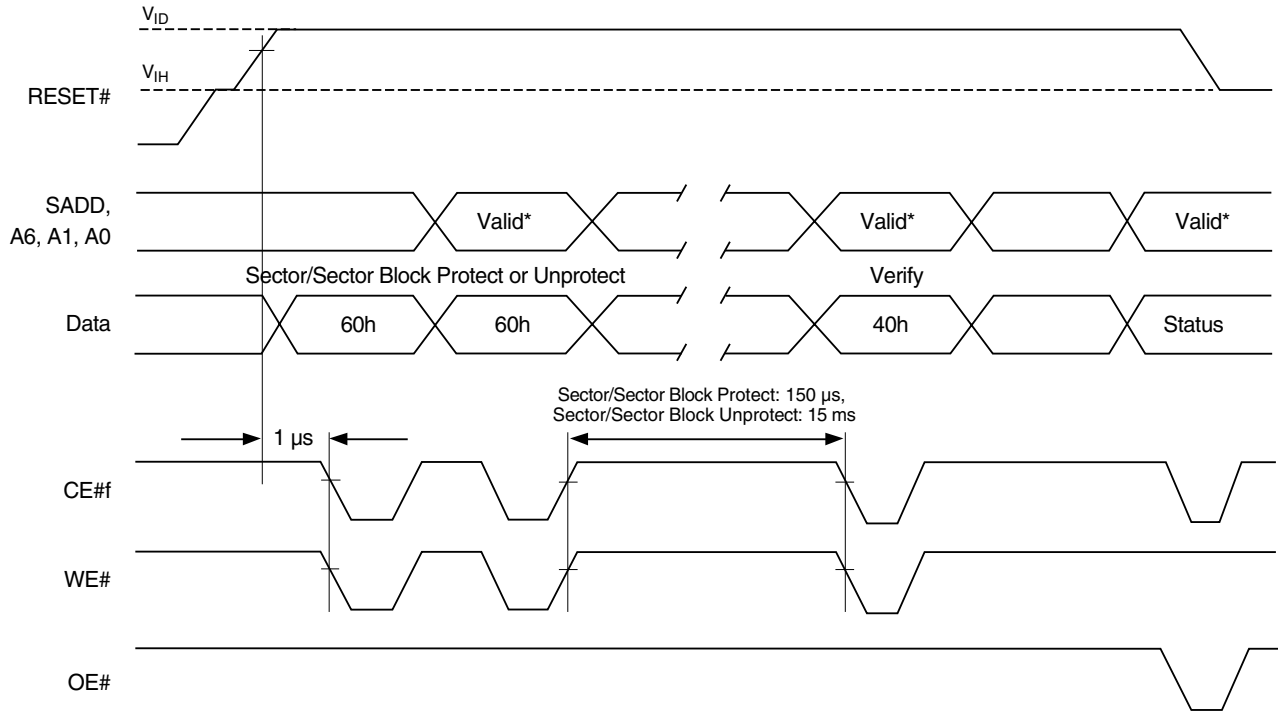

** For sector protect, A6 = 0, A1 = 1, A0 = 0. For sector unprotect, A6 = 1, A1 = 1, A0 = 0. SA = Sector Address*

Figure 26. Sector/Sector Block Protect and Unprotect Timing Diagram

AC CHARACTERISTICS

Alternate CE#f Controlled Erase and Program Operations

Parameter		Description		Speed Options		Unit
JEDEC	Std			70	85	
t_{AVAV}	t_{WC}	Write Cycle Time (Note 1)	Min	70	85	ns
t_{AVWL}	t_{AS}	Address Setup Time (WE# to Address)	Min	0		ns
	t_{ASO}	Address Setup Time to CE#f Low During Toggle Bit Polling	Min	15		ns
t_{ELAX}	t_{AH}	Address Hold Time	Min	45		ns
	t_{AHT}	Address Hold time from CE#f or OE# High During Toggle Bit Polling	Min	0		ns
t_{DVEH}	t_{DS}	Data Setup Time	Min	35		ns
t_{EHDX}	t_{DH}	Data Hold Time	Min	0		ns
t_{GHEL}	t_{GHEL}	Read Recovery Time Before Write (OE# High to WE# Low)	Min	0		ns
t_{WLEL}	t_{WS}	WE# Setup Time	Min	0		ns
t_{EHWH}	t_{WH}	WE# Hold Time	Min	0		ns
t_{ELEH}	t_{CP}	CE#f Pulse Width	Min	30	35	ns
t_{EHEL}	t_{CPH}	CE#f Pulse Width High	Min	30	35	ns
t_{WHWH1}	t_{WHWH1}	Programming Operation (Note 2)	Typ	7		µs
t_{WHWH1}	t_{WHWH1}	Accelerated Programming Operation (Note 2)	Typ	4		µs
t_{WHWH2}	t_{WHWH2}	Sector Erase Operation (Note 2)	Typ	0.7		sec

Notes:

1. *Not 100% tested.*
2. *See the "Flash Erase And Programming Performance" section for more information.*

AC CHARACTERISTICS

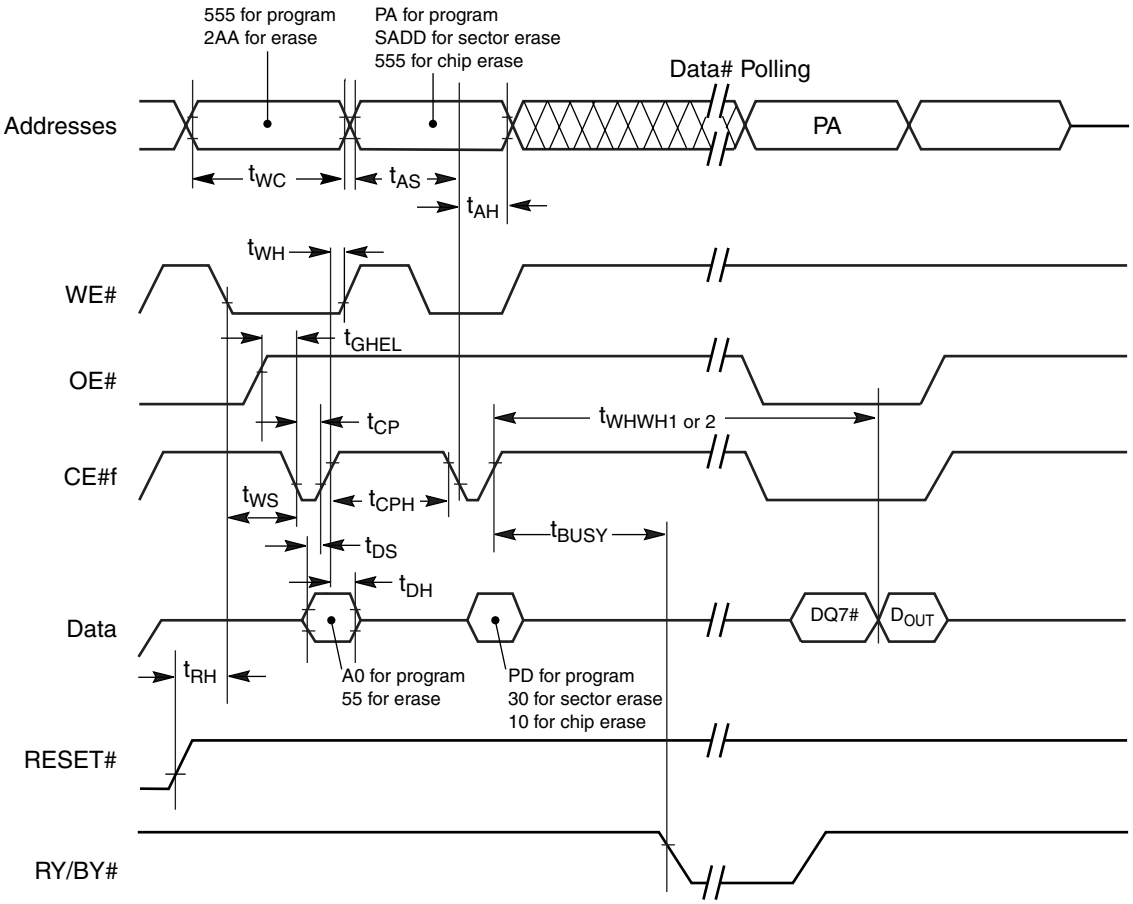

Notes:

1. *Figure indicates last two bus cycles of a program or erase operation.*
2. *PA = program address, SA = sector address, PD = program data.*
3. *DQ7# is the complement of the data written to the device. D_{OUT} is the data written to the device.*
4. *Waveforms are for the word mode.*

Figure 27. Flash Alternate CE#f Controlled Write (Erase/Program) Operation Timings

AC CHARACTERISTICS

SRAM Read Cycle

Parameter Symbol	Description		Speed Options		Unit
			70	85	
t_{RC}	Read Cycle Time	Min	70	85	ns
t_{AA}	Address Access Time	Max	70	85	ns
t_{CO1}, t_{CO2}	Chip Enable to Output	Max	70	85	ns
t_{OE}	Output Enable Access Time	Max	35	45	ns
t_{BA}	LB#s, UB#s to Valid Output	Max	70	85	ns
t_{LZ1}, t_{LZ2}	Chip Enable (CE1#s Low and CE2s High) to Low-Z Output	Min	10		ns
t_{BLZ}	UB#, LB# Enable to Low-Z Output	Min	10		ns
t_{OLZ}	Output Enable to Low-Z Output	Min	5		ns
t_{HZ1}, t_{HZ2}	Chip disable to High-Z Output	Min	0		ns
		Max	25		
t_{BHZ}	UB#s, LB#s Disable to High-Z Output	Min	0		ns
		Max	25		
t_{OHZ}	Output Disable to High-Z Output	Min	0		ns
		Max	25		
t_{OH}	Output Data Hold from Address Change	Min	10	15	ns

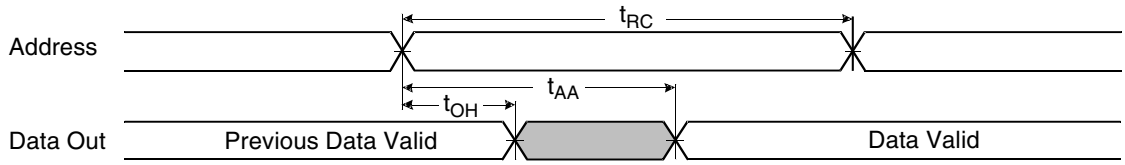

Note: *CE1#s = OE# = V_{IL}, CE2s = WE# = V_{IH}, UB#s and/or LB#s = V_{IL}*

Figure 28. SRAM Read Cycle—Address Controlled

AC CHARACTERISTICS

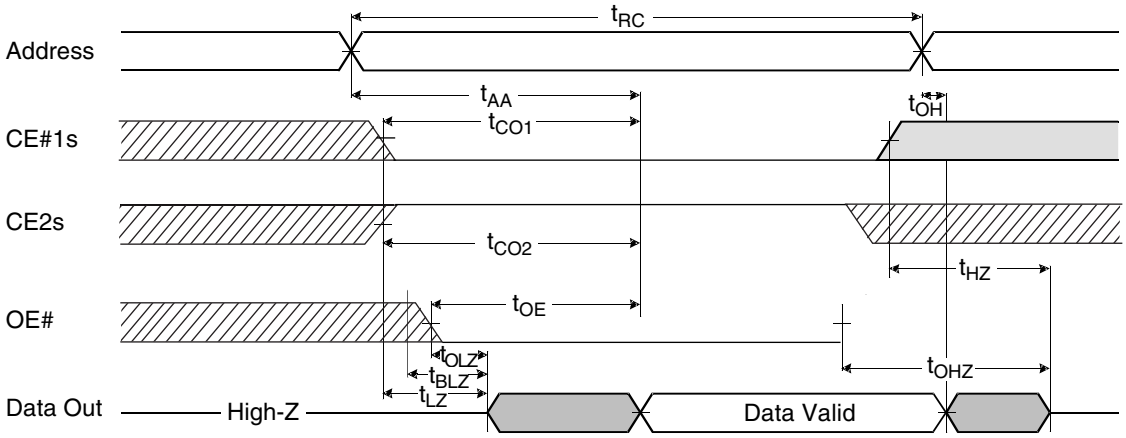

Figure 29. SRAM Read Cycle

Notes:

1. *WE# = V_{IH}, if CIOs is low, ignore UB#s/LB#s timing.*
1. *t_{HZ} and t_{OHZ} are defined as the time at which the outputs achieve the open circuit conditions and are not referenced to output voltage levels.*
2. *At any given temperature and voltage condition, t_{HZ} (Max.) is less than t_{LZ} (Min.) both for a given device and from device to device interconnection.*

AC CHARACTERISTICS

SRAM Write Cycle

Parameter Symbol	Description		Speed Options		Unit
			70	85	
t_{WC}	Write Cycle Time	Min	70	85	ns
t_{Cw}	Chip Enable to End of Write	Min	60	70	ns
t_{AS}	Address Setup Time	Min	0		ns
t_{AW}	Address Valid to End of Write	Min	60	70	ns
t_{BW}	UB#s, LB#s to End of Write	Min	60	70	ns
t_{WP}	Write Pulse Time	Min	50	60	ns
t_{WR}	Write Recovery Time	Min	0		ns
t_{WHZ}	Write to Output High-Z	Min	0		ns
		Max	20	25	
t_{DW}	Data to Write Time Overlap	Min	30	35	ns
t_{DH}	Data Hold from Write Time	Min	0		ns
t_{OW}	End Write to Output Low-Z	Min	5		ns

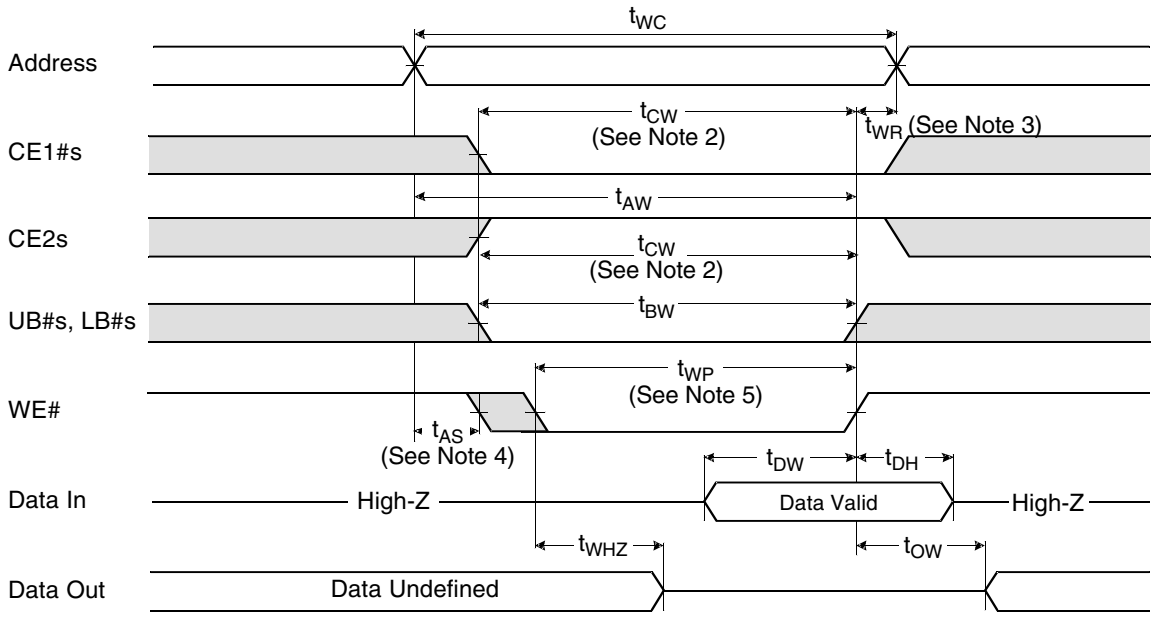

Notes:

1. *WE# controlled, if CIOs is low, ignore UB#s and LB#s timing.*
1. *t_{CW} is measured from CE1#s going low to the end of write.*
2. *t_{WR} is measured from the end of write to the address change. t_{WR} applied in case a write ends as CE1#s or WE# going high.*
3. *t_{AS} is measured from the address valid to the beginning of write.*
4. *A write occurs during the overlap (t_{WP}) of low CE#1 and low WE#. A write begins when CE1#s goes low and WE# goes low when asserting UB#s or LB#s for a single byte operation or simultaneously asserting UB#s and LB#s for a double byte operation. A write ends at the earliest transition when CE1#s goes high and WE# goes high. The t_{WP} is measured from the beginning of write to the end of write.*

Figure 30. SRAM Write Cycle—WE# Control

AC CHARACTERISTICS

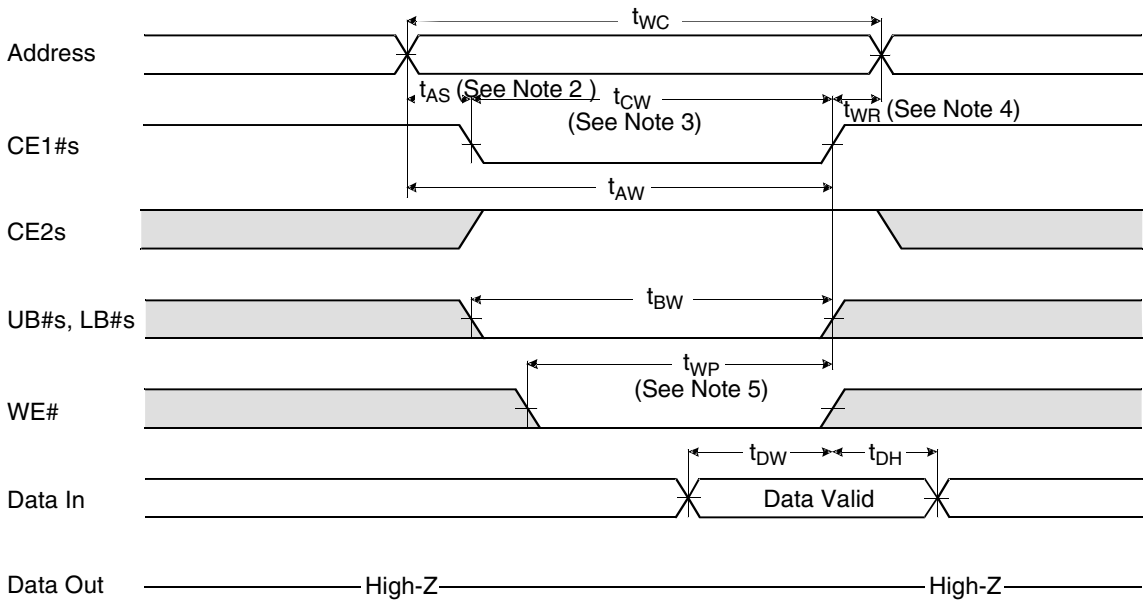

Notes:

1. *CE1#s controlled, if CIOs is low, ignore UB#s and LB#s timing.*
1. *t_{CW} is measured from CE1#s going low to the end of write.*
2. *t_{WR} is measured from the end of write to the address change. t_{WR} applied in case a write ends as CE1#s or WE# going high.*
3. *t_{AS} is measured from the address valid to the beginning of write.*
4. *A write occurs during the overlap (t_{WP}) of low CE#1 and low WE#. A write begins when CE1#s goes low and WE# goes low when asserting UB#s or LB#s for a single byte operation or simultaneously asserting UB#s and LB#s for a double byte operation. A write ends at the earliest transition when CE1#s goes high and WE# goes high. The t_{WP} is measured from the beginning of write to the end of write.*

Figure 31. SRAM Write Cycle—CE1#s Control

AC CHARACTERISTICS

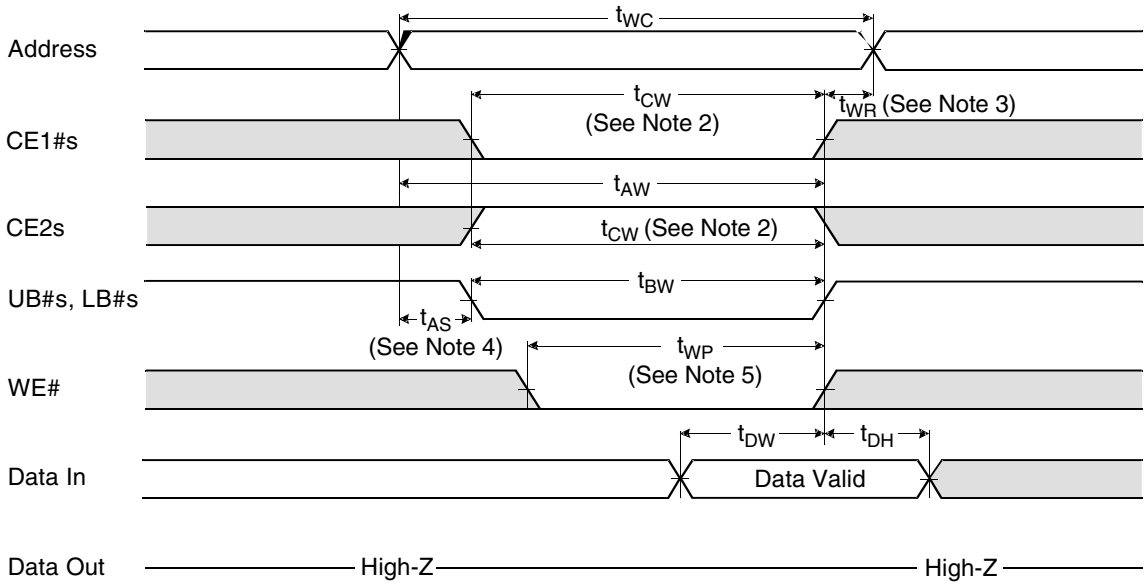

Notes:

1. *UB#s and LB#s controlled, CIOs must be high.*
1. *t_{CW} is measured from CE1#s going low to the end of write.*
2. *t_{WR} is measured from the end of write to the address change. t_{WR} applied in case a write ends as CE1#s or WE# going high.*
3. *t_{AS} is measured from the address valid to the beginning of write.*
4. *A write occurs during the overlap (t_{WP}) of low CE#1 and low WE#. A write begins when CE1#s goes low and WE# goes low when asserting UB#s or LB#s for a single byte operation or simultaneously asserting UB#s and LB#s for a double byte operation. A write ends at the earliest transition when CE1#s goes high and WE# goes high. The t_{WP} is measured from the beginning of write to the end of write.*

Figure 32. SRAM Write Cycle—UB#s and LB#s Control

FLASH ERASE AND PROGRAMMING PERFORMANCE

Parameter		Typ (Note 1)	Max (Note 2)	Unit	Comments
Sector Erase Time		0.7	15	sec	Excludes 00h programming prior to erasure (Note 4)
Chip Erase Time		27		sec	
Byte Program Time		5	150	µs	
Word Program Time		7	210	µs	Excludes system level overhead (Note 5)
Accelerated Byte/Word Program Time		4	120	µs	
	Byte Mode	9	27		
Chip Program Time (Note 3)	Word Mode	6	18	sec	

Notes:

1. *Typical program and erase times assume the following conditions: 25°C, 3.0 V V_{CC}, 1,000,000 cycles. Additionally, programming typicals assume checkerboard pattern.*
2. *Under worst case conditions of 90°C, V_{CC} = 2.7 V, 1,000,000 cycles.*
3. *The typical chip programming time is considerably less than the maximum chip programming time listed, since most byteswords program faster than the maximum program times listed.*
4. *In the pre-programming step of the Embedded Erase algorithm, all bytewords are programmed to 00h before erasure.*
5. *System-level overhead is the time required to execute the two- or four-bus-cycle sequence for the program command. See Table 14 for further information on command definitions.*
6. *The device has a minimum erase and program cycle endurance of 1,000,000 cycles.*

FLASH LATCHUP CHARACTERISTICS

Description	Min	Max
Input voltage with respect to V_{SS} on all pins except I/O pins (including OE# and RESET#)	–1.0 V	12.5 V
Input voltage with respect to V_{SS} on all I/O pins	–1.0 V	V_{CC} + 1.0 V
V_{CC} Current	–100 mA	+100 mA

Note: *Includes all pins except V_{CC}. Test conditions: V_{CC} = 3.0 V, one pin at a time.*

PACKAGE PIN CAPACITANCE

Parameter Symbol	Description	Test Setup	Typ	Max	Unit
C_{IN}	Input Capacitance	V_{IN} = 0	11	14	pF
C_{OUT}	Output Capacitance	V_{OUT} = 0	12	16	pF
C_{IN2}	Control Pin Capacitance	V_{IN} = 0	14	16	pF
C_{IN3}	WP#/ACC Pin Capacitance	V_{IN} = 0	17	20	pF

Note: *7.Test conditions T_A = 25°C, f = 1.0 MHz.*

FLASH DATA RETENTION

Parameter Description	Test Conditions	Min	Unit
Minimum Pattern Data Retention Time	150°C	10	Years
	125°C	20	Years

SRAM DATA RETENTION CHARACTERISTICS

Parameter Symbol	Parameter Description	Test Setup	Min	Typ	Max	Unit
V_{DR}	V_{CC} for Data Retention	CS1#s ≥ V_{CC} – 0.2 V (See Note)	1.5		3.3	V
I_{DH}	Data Retention Current	V_{CC} = 1.5 V, CE1#s ≥ V_{CC} – 0.2 V (See Note)		0.5	2	µA
t_{SDR}	Data Retention Set-Up Time	See data retention waveforms	0			ns
t_{RDR}	Recovery Time		t_{RC}			ns

Note: *CE1#s ≥ V_{CC} – 0.2 V, CE2s ≥ V_{CC} – 0.2 V (CE1#s controlled) or CE2s ≤ 0.2 V (CE2s controlled), CIOs = V_{SS} or V_{CC}.*

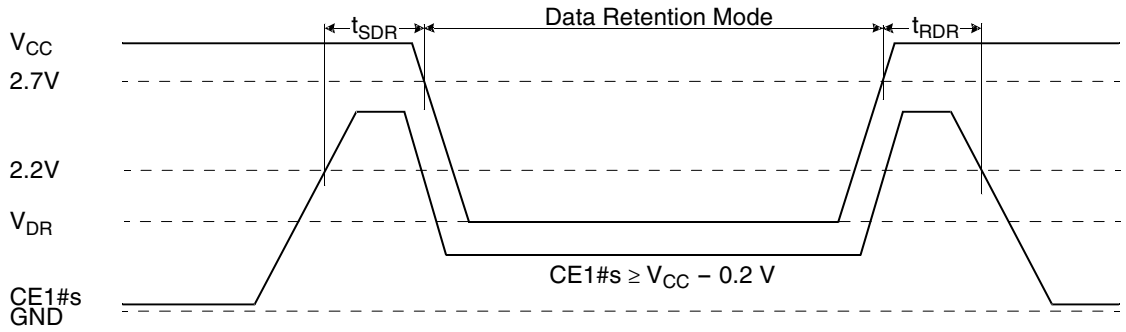

Figure 33. CE1#s Controlled Data Retention Mode

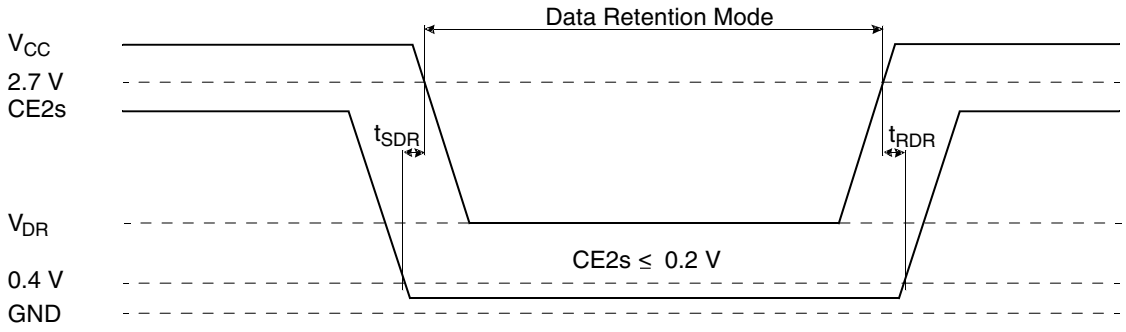

Figure 34. CE2s Controlled Data Retention Mode

PHYSICAL DIMENSIONS

FLA069—69-Ball Fine-Pitch Grid Array 8 x 11 mm

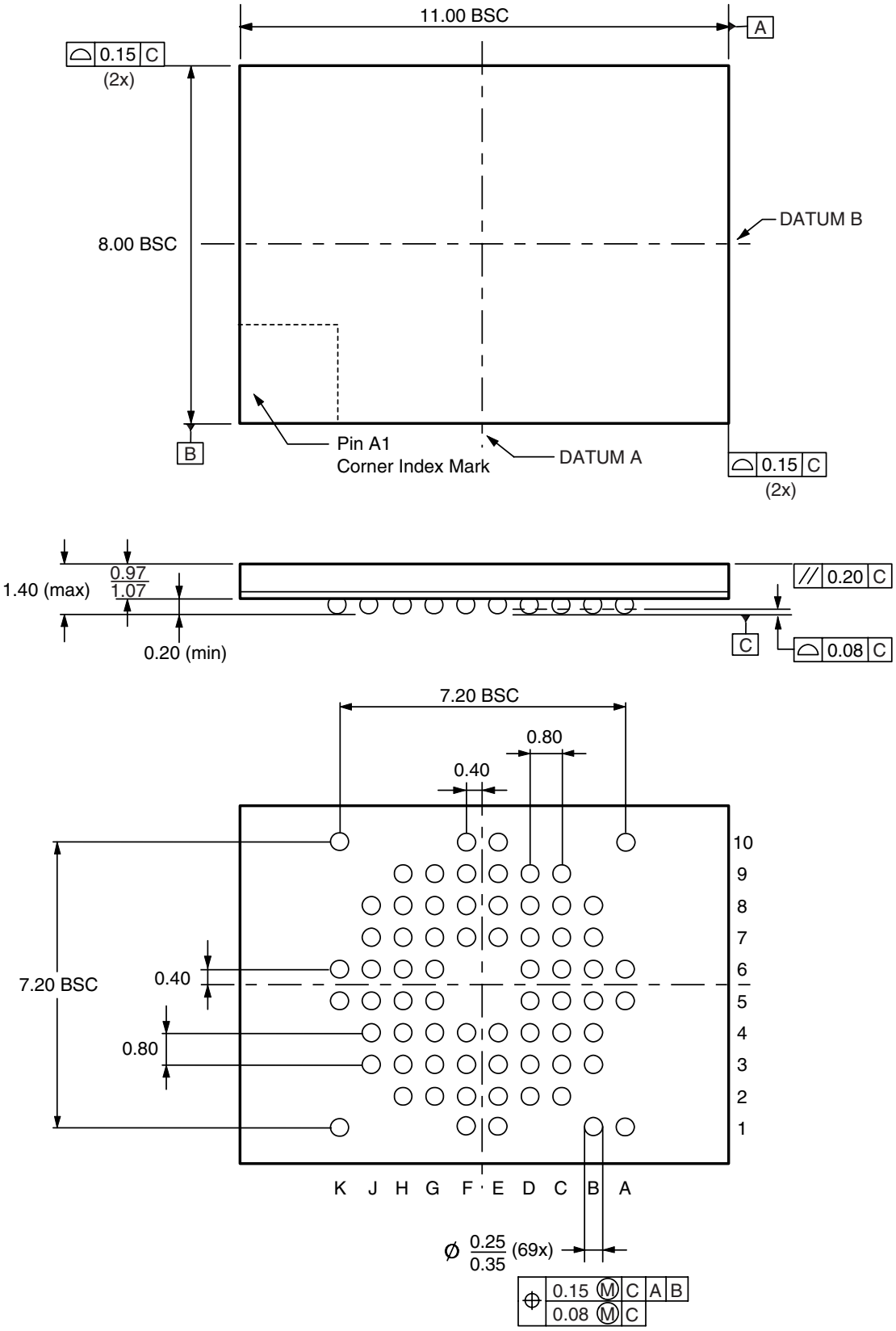

REVISION SUMMARY

Revision A (October 24, 2001)

Initial release.

Revision A+1 (March 4, 2002)

Ordering Information

Changed package marking for Am42DL1642D (4 part numbers).

Figure 30, SRAM Write Cycle—WE# Control

In Data Out waveform, corrected t_{BW} to t_{WHZ}.

Revision A+2 (February 6, 2004)

Command Definitions

The result of writing incorrect address and data values changed to reflect that doing so places the device in an unknown state.

Unlock Bypass Command Sequence

Deleted statements regarding what the first and second cycles must contain to exit the unlock bypass mode.

Table 14. Command Definitions

The first address designator in the Unlock Bypass Reset command sequence changed from BA to XXX.

Trademarks

Copyright © 2002 Advanced Micro Devices, Inc. All rights reserved.

AMD, the AMD logo, and combinations thereof are registered trademarks of Advanced Micro Devices, Inc.

ExpressFlash is a trademark of Advanced Micro Devices, Inc.

Product names used in this publication are for identification purposes only and may be trademarks of their respective companies.

Product Selector Guide 5
MCP Block Diagram 5
Flash Memory Block Diagram 6
Connection Diagram 7
Special Handling Instructions for FBGA Package 7
Pin Description 8
Logic Symbol 8
Ordering Information 9
Device Bus Operations 10
Table 1. Device Bus Operations—Flash Word Mode (CIOf = V_{IH}), SRAM Word Mode (CIOs = V_{CC}) 11
Table 2. Device Bus Operations—Flash Byte Mode (CIOf = V_{SS}), SRAM Word Mode (CIOs = V_{CC}) 12
Word/Byte Configuration 13
Requirements for Reading Array Data 13
Writing Commands/Command Sequences 13
Accelerated Program Operation 13
Autoselect Functions 13
Simultaneous Read/Write Operations with Zero Latency 13
Standby Mode 14
Automatic Sleep Mode 14
RESET#: Hardware Reset Pin 14
Output Disable Mode 14
Table 3. Device Bank Division 14
Table 4. Sector Addresses for Top Boot Sector Devices 15
Table 5. SecSi Sector Addresses for Top Boot Devices 15
Table 6. Sector Addresses for Bottom Boot Sector Devices 16
Table 7. SecSi™ Addresses for Bottom Boot Devices 16
Autoselect Mode 17
Sector/Sector Block Protection and Unprotection 17
Table 8. Top Boot Sector/Sector Block Addresses for Protection/Unprotection 17
Table 9. Bottom Boot Sector/Sector Block Addresses for Protection/Unprotection 17
Write Protect (WP#) 18
Temporary Sector/Sector Block Unprotect 18
Figure 1. Temporary Sector Unprotect Operation 18
Figure 2. In-System Sector/Sector Block Protect and Unprotect Algorithms 19
SecSi (Secured Silicon) Sector Flash Memory Region 20
Factory Locked: SecSi Sector Programmed and Protected At the Factory 20
Customer Lockable: SecSi Sector NOT Programmed or Protected At the Factory 20
Hardware Data Protection 20
Low V_{CC} Write Inhibit 20
Write Pulse “Glitch” Protection 21
Logical Inhibit 21
Power-Up Write Inhibit 21
Common Flash Memory Interface (CFI) 21
Table 10. CFI Query Identification String 21
System Interface String 22
Table 12. Device Geometry Definition 22
Table 13. Primary Vendor-Specific Extended Query 23
Command Definitions 24
Reading Array Data 24
Reset Command 24
Autoselect Command Sequence 24
Enter SecSi Sector/Exit SecSi Sector Command Sequence 25
Byte/Word Program Command Sequence 25
Unlock Bypass Command Sequence 25
Figure 3. Program Operation 26
Chip Erase Command Sequence 26
Sector Erase Command Sequence 26
Erase Suspend/Erase Resume Commands 27
Figure 4. Erase Operation 27
Table 14. Command Definitions 28
Table 15. Autoselect Device ID Codes 28
Write Operation Status 29
DQ7: Data# Polling 29
Figure 5. Data# Polling Algorithm 29
RY/BY#: Ready/Busy# 30
DQ6: Toggle Bit I 30
Figure 6. Toggle Bit Algorithm 30
DQ2: Toggle Bit II 31
Reading Toggle Bits DQ6/DQ2 31
DQ5: Exceeded Timing Limits 31
DQ3: Sector Erase Timer 31
Table 16. Write Operation Status 32
Absolute Maximum Ratings 33
Operating Ranges 33
Industrial (I) Devices 33
V_{CC}f/V_{CC}s Supply Voltage 33
DC Characteristics 34
CMOS Compatible 34
SRAM DC and Operating Characteristics 35
Zero-Power Flash 36
Figure 9. I_{CC1} Current vs. Time (Showing Active and Automatic Sleep Currents) 36
Figure 10. Typical I_{CC1} vs. Frequency 36
Test Conditions 37
Figure 11. Test Setup 37
Table 17. Test Specifications 37
Key To Switching Waveforms 37
Figure 12. Input Waveforms and Measurement Levels 37
AC Characteristics 38
SRAM CE#s Timing 38
Figure 13. Timing Diagram for Alternating Between SRAM to Flash 38
Flash Read-Only Operations 39
Figure 14. Read Operation Timings 39
Hardware Reset (RESET#) 40
Figure 15. Reset Timings 40
Flash Word/Byte Configuration (CIOf) 41
Figure 16. CIOf Timings for Read Operations 41
Figure 17. CIOf Timings for Write Operations 41
Flash Erase and Program Operations 42
Figure 18. Program Operation Timings 43
Figure 19. Accelerated Program Timing Diagram 43
Figure 20. Chip/Sector Erase Operation Timings 44
Figure 21. Back-to-back Read/Write Cycle Timings 45
Figure 22. Data# Polling Timings (During Embedded Algorithms). 45
Figure 23. Toggle Bit Timings (During Embedded Algorithms) 46
Figure 24. DQ2 vs. DQ6 46
Temporary Sector/Sector Block Unprotect 47
Figure 25. Temporary Sector/Sector Block Unprotect Timing Diagram 47
Figure 26. Sector/Sector Block Protect and Unprotect Timing Diagram 48

Alternate CE#f Controlled Erase and Program Operations 49
Figure 27. Flash Alternate CE#f Controlled Write (Erase/Program) Operation Timings 50
SRAM Read Cycle 51
Figure 28. SRAM Read Cycle—Address Controlled 51
Figure 29. SRAM Read Cycle 52
SRAM Write Cycle 53
Figure 30. SRAM Write Cycle—WE# Control 53
Figure 31. SRAM Write Cycle—CE1#s Control 54
Figure 32. SRAM Write Cycle—UB#s and LB#s Control 55
Flash Erase And Programming Performance . . 56
Flash Latchup Characteristics. 56
Package Pin Capacitance 56
FLASH Data Retention 56
SRAM Data Retention Characteristics 57
Figure 33. CE1#s Controlled Data Retention Mode 57
Figure 34. CE2s Controlled Data Retention Mode 57
Physical Dimensions 58
FLA069—69-Ball Fine-Pitch Grid Array 8 x 11 mm 58
Revision Summary 59
Revision A (October 24, 2001) 59