tyco Electronics

MACOM

Ultra Low Noise pHEMT Dual Channel Amplifier, 1.710-1.910 GHz

AM40-0023
V3

Features

- 0.7 dB Typical Noise Figure
- 14 dB Typical Gain
- DC Decoupled RF Input and Output
- Single Bias Configuration
- SMT Construction
- Dual Channels for Balanced Designs
- Unconditionally Stable—No External Matching Circuit required

Description

M/A-COM's AM40-0023 is a dual-channel, ultra low noise amplifier in a surface mount package. Very low noise figure is achieved by using discrete pHEMT devices combined with M/A-COM's glass technology. The AM40-0023 is designed specifically for use in DCS-1800 and PCS telecommunication applications where less than 1 dB noise figure is required.

CR-5

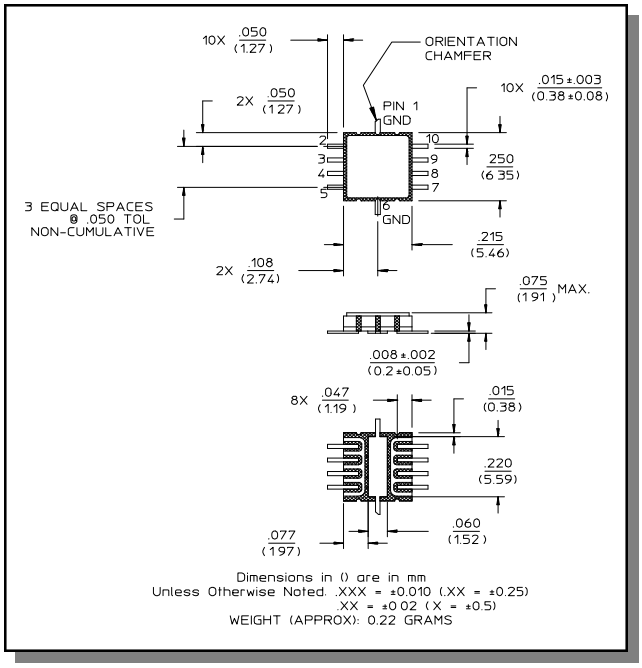

Electrical Specifications:

Bias Conditions: +7V @ 20 mA Typical (each channel,) T_A = +25°C, Z_0 = 50 Ohms

Parameter	Test Conditions	Frequency	Units	Min.	Typ.	Max.
Gain	P_{IN} = -20 dBm	1.710-1.910 GHz	dB	11	14	—
Gain Flatness	P_{IN} = -20 dBm	1.710-1.910 GHz	dB	—	± 1.0	± 1.5
Noise Figure	—	1.710-1.910 GHz	dB	—	0.7	0.9
VSWR Input	P_{IN} = -20 dBm	1.710-1.910 GHz	Ratio	—	2.0:1	3.0:1
VSWR Output	P_{IN} = -20 dBm	1.710-1.910 GHz	Ratio	—	2.0:1	3.0:1
1 dB Compression	Input Power	1.710-1.910 GHz	dBm	-13	-9	—
Reverse Isolation	—	1.710-1.910 GHz	dB	20	25	—
Input Third Order Intercept	—	1.710-1.910 GHz	dBm	0	3	—

M/A-COM Inc. and its affiliates reserve the right to make changes to the product(s) or information contained herein without notice. M/A-COM makes no warranty, representation or guarantee regarding the suitability of its products for any particular purpose, nor does M/A-COM assume any liability whatsoever arising out of the use or application of any product(s) or information.

- **North America** Tel: 800.366.2266 / Fax: 978.366.2266
- **Europe** Tel: 44.1908.574.200 / Fax: 44.1908.574.300
- **Asia/Pacific** Tel: 81.44.844.8296 / Fax: 81.44.844.8298

Visit www.macom.com for additional data sheets and product information.

Typical Performance Curves

Gain vs. Frequency

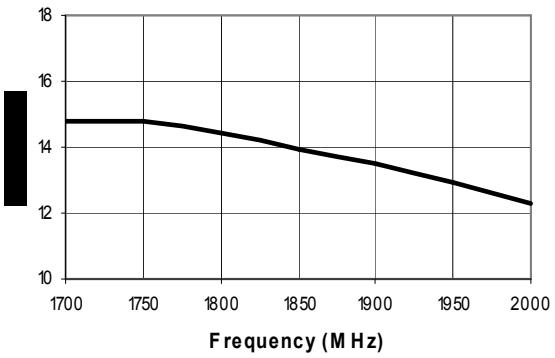

Input & Output Return Loss

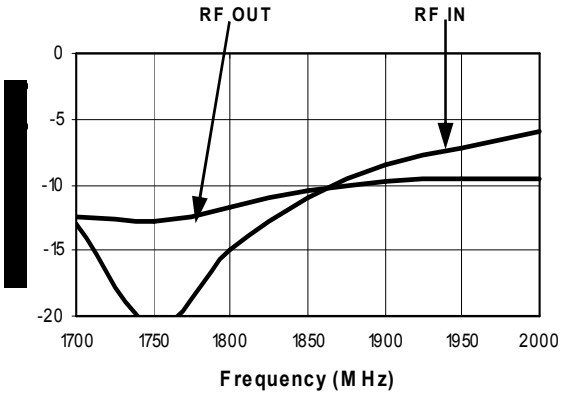

Noise Figure vs. Frequency

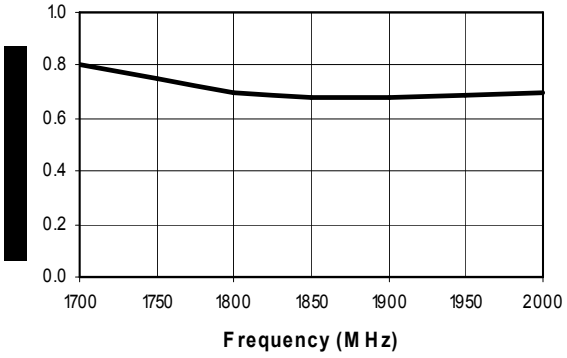

Functional Schematic (Top View)

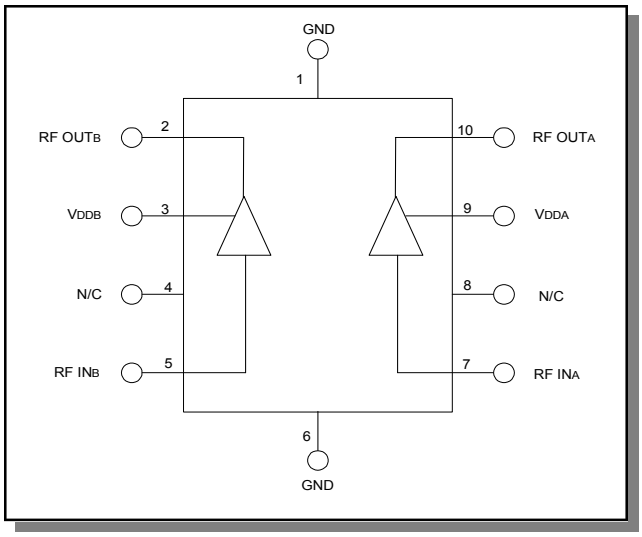

Absolute Maximum Ratings [1]

Parameter	Absolute Maximum
Max. Input Power [2]	+15 dBm
Operating Voltage [2]	+10.0 V
Operating Temperature	-55°C to +125°C
Storage Temperature	-65°C to +150°C

1. Operation of this device above any one of these parameters may cause permanent damage.
2. Ambient Temperature (T_A) = +25°C

Ordering Information

Part Number	Package
AM40-0023 PIN	CR-5

M/A-COM Inc. and its affiliates reserve the right to make changes to the product(s) or information contained herein without notice. M/A-COM makes no warranty, representation or guarantee regarding the suitability of its products for any particular purpose, nor does M/A-COM assume any liability whatsoever arising out of the use or application of any product(s) or information.

• **North America** Tel: 800.366.2266 / Fax: 978.366.2266
• **Europe** Tel: 44.1908.574.200 / Fax: 44.1908.574.300
• **Asia/Pacific** Tel: 81.44.844.8296 / Fax: 81.44.844.8298

Visit www.macom.com for additional data sheets and product information.