Series AM2LS-NZ

2 Watt | DC-DC Converter



FEATURES:

- SMD Package
- Efficiency up to 86%
- Unregulated
- Industry Standard Pinout
- Single Output Models
- Operating temperature -40°C to +105°C
- Input / Output Isolation 1500 VDC
- Continuous Short Circuit Protection

RoHS

Models

Single output

Model	Input Voltage (V)	Output Voltage (V)	Output Current Max (mA)	Isolation (VDC)	Max Capacitive Load(uF)	Efficiency (%)
AM2LS-0503S-NZ	4.5-5.5	3.3	400	1500	220	78
AM2LS-0505S-NZ	4.5-5.5	5	400	1500	220	79
AM2LS-0509S-NZ	4.5-5.5	9	222	1500	220	82
AM2LS-0512S-NZ	4.5-5.5	12	167	1500	220	82
AM2LS-0515S-NZ	4.5-5.5	15	133	1500	220	83
AM2LS-1205S-NZ	10.8-13.2	5	400	1500	220	79
AM2LS-1209S-NZ	10.8-13.2	9	222	1500	220	82
AM2LS-1212S-NZ	10.8-13.2	12	167	1500	220	82
AM2LS-1215S-NZ	10.8-13.2	15	133	1500	220	83
AM2LS-1224S-NZ	10.8-13.2	24	83	1500	220	84
AM2LS-1515S-NZ	13.5-16.5	15	133	1500	220	83
AM2LS-2405S-NZ	21.6-26.4	5	400	1500	220	79
AM2LS-2409S-NZ	21.6-26.4	9	222	1500	220	82
AM2LS-2412S-NZ	21.6-26.4	12	167	1500	220	82
AM2LS-2415S-NZ	21.6-26.4	15	133	1500	220	83
AM2LS-2424S-NZ	21.6-26.4	24	83	1500	220	86

NOTE: All specifications in this datasheet are measured at an ambient temperature of 25°C, humidity<75%, nominal input voltage and at rated output load unless otherwise specified.

Input Specifications

Parameters	Nominal	Typical	Maximum	Units
Voltage range	5 12 15 24	4.5-5.5 10.8-13.2 13.5-16.5 21.6-26.4		VDC
Reflected Input Ripple Current		15		mA
Absolute Max Input	5 Vin 12 Vin 15 Vin 24 Vin	9 18 21 30		VDC
Filter	Capacitor			

Isolation Specifications

Parameters	Conditions	Typical	Maximum	Units
Tested I/O voltage	60 sec	1500 models		VDC
Resistance	500VDC	>1000		MOhm
Capacitance		20		pF

Output Specifications

Parameters	Conditions	Typical	Maximum	Units
Voltage accuracy	100% load (see tolerance chart)	±2.5		%
Short Circuit protection	12 & 15 VDC input models	Continuous Auto Recovery		
	5 & 24 VDC Input models		1	Sec
Line voltage regulation	For ±1% of Vin 3.3V models only	±1.5 ±1.2		% of Vin
Load voltage regulation (10% - 100% load)	3.3V 5 V 9 V 12 V 15 V 24 V	18 12 9 8 7 6		%
Temperature coefficient	100% load	±0.03		%/°C
Ripple & Noise	At 20 MHz Bandwidth	100		mV p-p

* Products with 5Vdc and 24Vdc input voltage; the supply voltage must be discontinued at the end of short circuit duration.

General Specifications

Parameters	Conditions	Typical	Maximum	Units
Switching frequency	100% load	100	300	KHz
Operating temperature	With derating 3.3V & 5V above +71C Others +85C	-40 to +105		°C
Storage temperature	-55 to +125			°C
Cooling	Free air convection			
Storage Humidity	Non Condensing		95	% RH
Case material	Epoxy resin (UL94-V0)			
Weight	1.5			g
Dimensions (L x W x H)	0.50 x 0.44 x 0.28 inches	12.70 x 11.20 x 7.25 mm		
MTBF	>3500K hrs (MIL-HDBK -217F, Ground Benign, t=+25°C)hours			
Maximum soldering temperature	1.5mm from case for 10 sec		300	°C
Maximum case temperature			130	°C

Pin Out Specifications and Dimensions

Pin	Single Output
1	- V Input
2	+ V Input
3	No Pin
4	.-V Output
5	+V Output
6	No Pin
7	No Pin
8	N.C.

Single Output Models

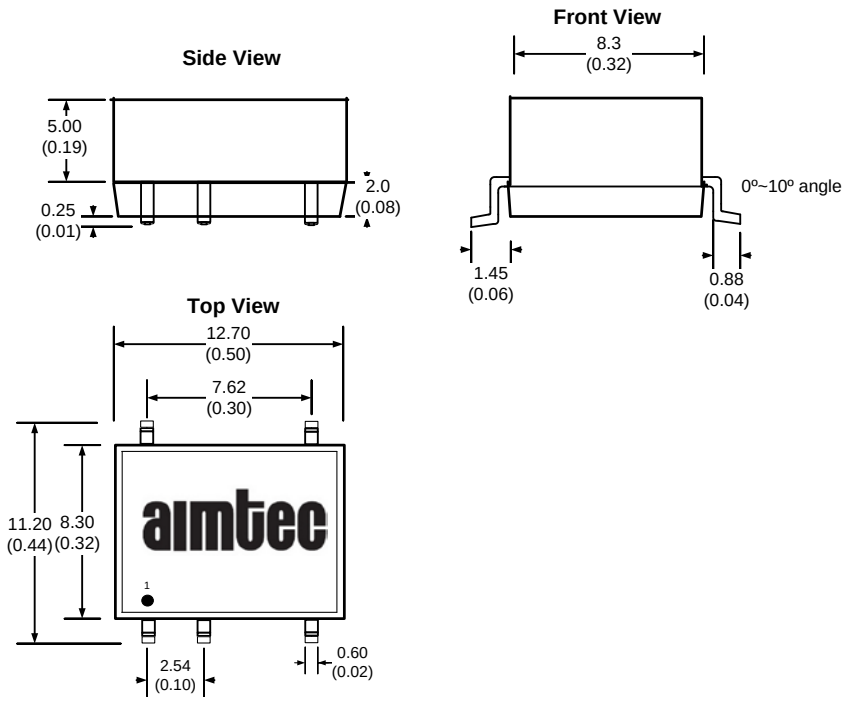

Recommended Circuits (EMI Class B)

Capacitor selection Table

Vout	C2
3.3 V	10 µF
5 V	10 µF
9 V	4.7 µF
12 V	2.2 µF
15 V	1 µF
24V	0.47 µF

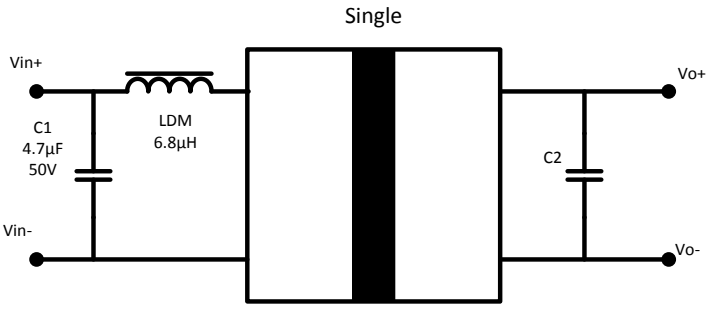

Load Accuracy Tolerance Graph

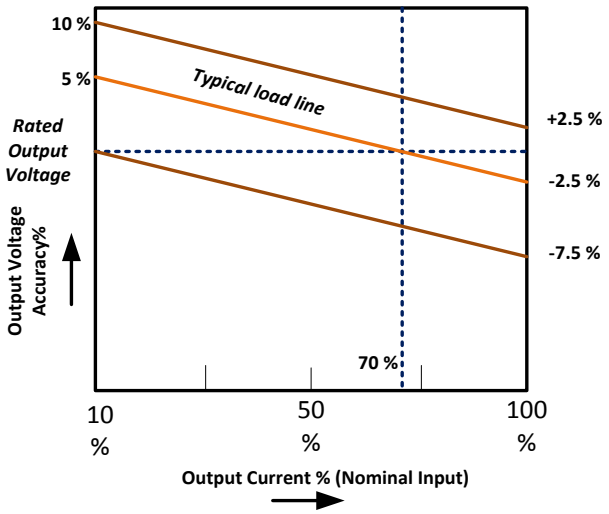

Derating

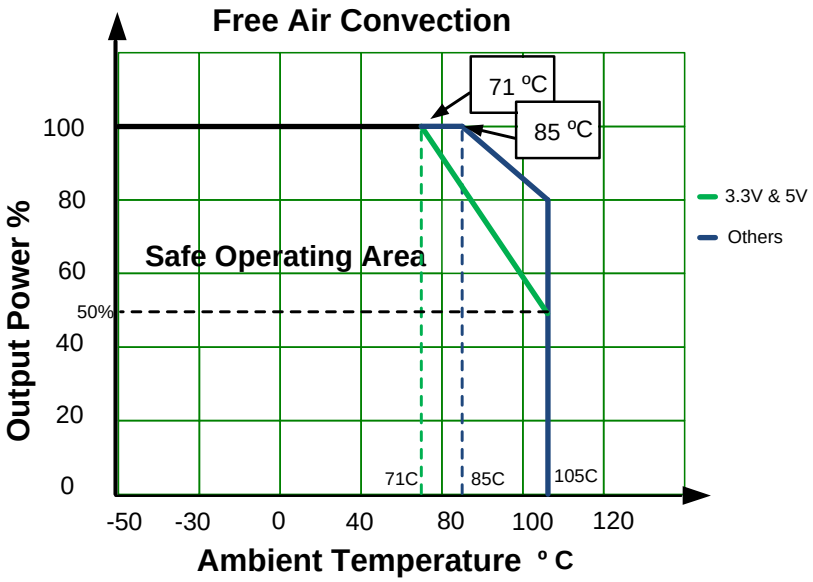

NOTE: 1. Datasheets are updated as needed and as such, specifications are subject to change without notice. Once printed or downloaded, datasheets are no longer controlled by Aimtec; refer to www.aimtec.com for the most current product specifications. **2.** Product labels shown, including safety agency certifications on labels, may vary based on the date manufactured. **3.** Mechanical drawings and specifications are for reference only. **4.** All specifications are measured at an ambient temperature of 25°C, humidity<75%, nominal input voltage and at rated output load unless otherwise specified. **5.**Aimtec may not have conducted destructive testing or chemical analysis on all internal components and chemicals at the time of publishing this document. CAS numbers and other limited information are considered proprietary and may not be available for release. **6.** This product is not designed for use in critical life support systems, equipment used in hazardous environments, nuclear control systems or other such applications which necessitate specific safety and regulatory standards other the ones listed in this datasheet. **7.** Warranty is in accordance with Aimtec's standard Terms of Sale available at www.aimtec.com.