AM20U-C Series



20 watt dc-dc converters

- POWER MODULES FOR PCB MOUNTING
- REGULATED OUTPUT
- V-OUT TRIM AND ON/OFF CONTROL
- LOW RIPPLE & NOISE

CE

GENERAL DESCRIPTION

Our AM20U-C series is a family of cost effective 20W single, dual & triple output DC-DC converters. These converters are shielded on all six sides and encapsulated with a nickel-coated copper with a non-conductive base and dimensions of 50.8x50.8x10.8mm. The high performance features of our AM20U-C components include short circuit protection with hiccup auto recovery, tight line regulation and a high efficiency operation coefficient up to 82%.

Thirty models operate from an input voltage range of 12, 24 & 48VDC producing single, dual or triple output voltages. The normal operation is specified over the full operating temperature range of -25°C to +71°C with no derating required. Cooling is done by free air convection.

ELECTRICAL SPECIFICATIONS

All specifications valid at nominal input voltage, full load and +25°C after warm-up time unless otherwise stated.

Input Specifications:	
Voltage range	12VDC, 9~18VDC 24VDC, 18~36VDC 48 VDC, 36~75VDC
Filter	p (Pi) Network

Isolation Specifications:	
Rated voltage	1500VDC
Resistance	>1000 Mohms
Capacitance	1000pF

General Specifications:	
Efficiency	77% to 82%
Switching frequency	200KHz, typ. 100% load

Environmental Specifications:	
Operating temperature	-25°C …+71°C
Storage temperature	-55°C …+105°C
Case temperature	+95°C, max.
Humidity (non-condensing)	Up to 95%
Cooling	Free-air convection

Output Specifications:	
Voltage accuracy	±2%, max.
Ripple	<0.2% Vout +20mVmax (Vp-p)
Noise	<0.5% Vout +50mVmax (Vp-p)
Short circuit protection	Hiccup, auto-recovery
Over current protection	Works over 120% of rating and recovers automatically
Over voltage protection	Zener diode clamp protection
Line regulation (HL-LL)	±0.5%, typ. ±1%/±5%-for triple output
Load regulation(10-100%)	±0.5%, typ. ±3% -dual; ±3%/±5%-triple
Temperature coefficient	±0.02%/°C, typ.

Physical Specifications:	
Dimensions	50.8x50.8x10.8mm 2.0x2.0x0.42inches
Weight	70g
Case material	Nickel-Coated Copper with Non-Conductive base, six sides' shielded

MTBF: > 550,000 hrs (MIL-HDBK-217F, Ground Benign, t=+25ºC)

Specifications are subject to change without notification

Continued on next page

OUTLINE DIMENSIONS & PIN CONNECTIONS

MECHANICAL DIMENSION (Top View)

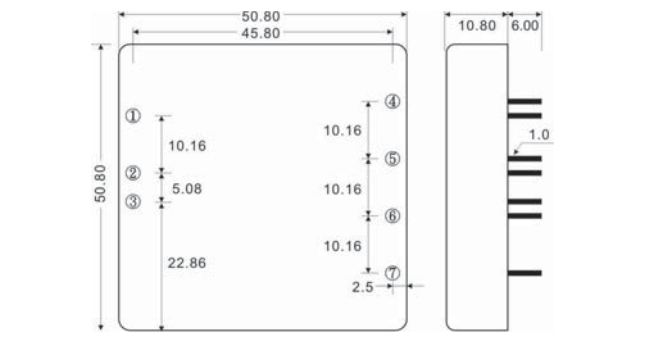

Pin	Single	Dual	Triple
1	On/Off	On/Off	On/Off
2	-V Input	-V Input	-V Input
3	+V Input	+V Input	+V Input
4	Trim	Trim	-V Output
5	-V Output	-V Output	Common
6	+V Output	Common	+5V Output
7	N.C.	+V Output	+V Ouput

BLOCK DIAGRAM

Single Output

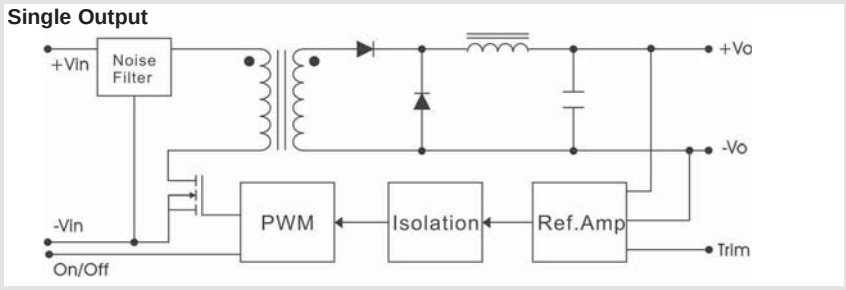

Dual Output

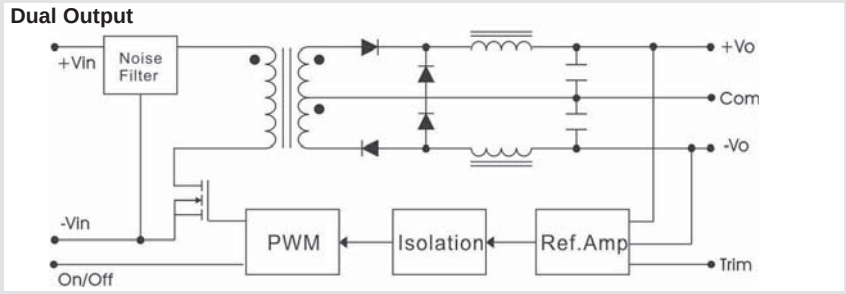

Triple Output

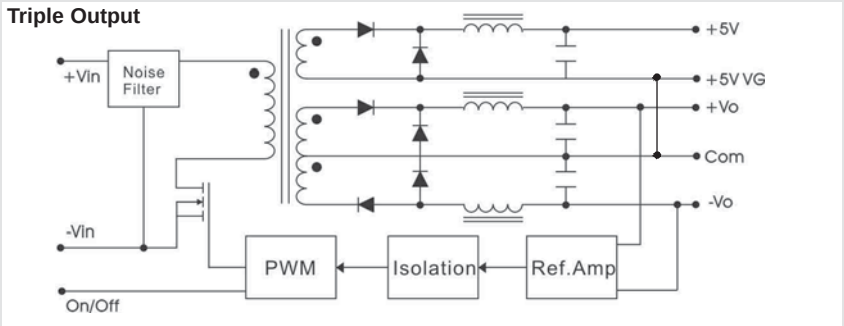

DERATING

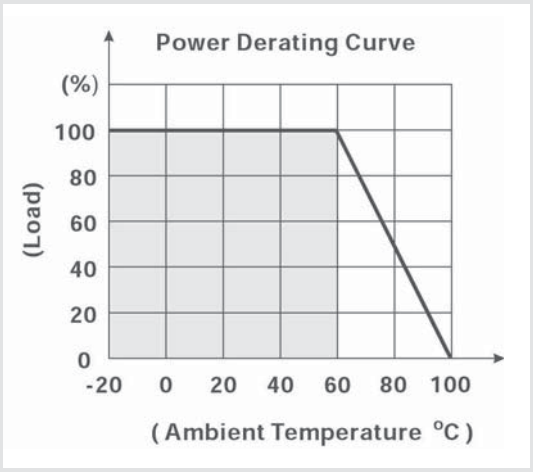

TRIMMING

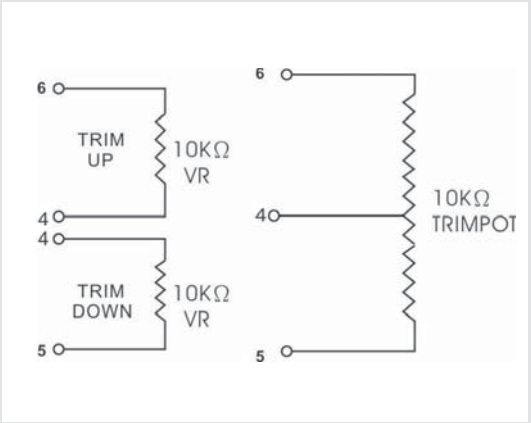

Continued on next page

MODELS

Single output

Models	Input Voltage	Ouput Voltage	Ouput Current max.
AM20U-1203SC	9VDC-18VDC	3.3VDC	4000mA
AM20U-1205SC		5VDC	4000mA
AM20U-1212SC		12VDC	1670mA
AM20U-1215SC		15VDC	1330mA
AM20U-1224SC		24VDC	830mA
AM20U-2403SC	18VDC-36VDC	3.3VDC	4000mA
AM20U-2405SC		5VDC	4000mA
AM20U-2412SC		12VDC	1670mA
AM20U-2415SC		15VDC	1330mA
AM20U-2424SC		24VDC	830mA
AM20U-4803SC	36VDC-75VDC	3.3VDC	4000mA
AM20U-4805SC		5VDC	4000mA
AM20U-4812SC		12VDC	1670mA
AM20U-4815SC		15VDC	1330mA
AM20U-4824SC		24VDC	830mA

Dual output

Models	Input Voltage	Ouput Voltage	Ouput Current max.
AM20U-1205DC	9VDC-18VDC	±5VDC	±2000mA
AM20U-1212DC		±12VDC	±830mA
AM20U-1215DC		±15VDC	±660mA
AM20U-2405DC	18VDC-36VDC	±5VDC	±2000mA
AM20U-2412DC		±12VDC	±830mA
AM20U-2415DC		±15VDC	±660mA
AM20U-4805DC	36VDC-75VDC	±5VDC	±2000mA
AM20U-4812DC		±12VDC	±830mA
AM20U-4815DC		±15VDC	±660mA

Triple output

Models	Input Voltage	Ouput Voltage	Ouput Current max.
AM20U-12512TC	9VDC-18VDC	5/±12VDC	2500/±300mA
AM20U-12515TC		5/±15VDC	2500/±250mA
AM20U-24512TC	18VDC-36VDC	5/±12VDC	2500/±300mA
AM20U-24515TC		5/±15VDC	2500/±250mA
AM20U-48512TC	36VDC-75VDC	5/±12VDC	2500/±300mA
AM20U-48515TC		5/±15VDC	2500/±250mA